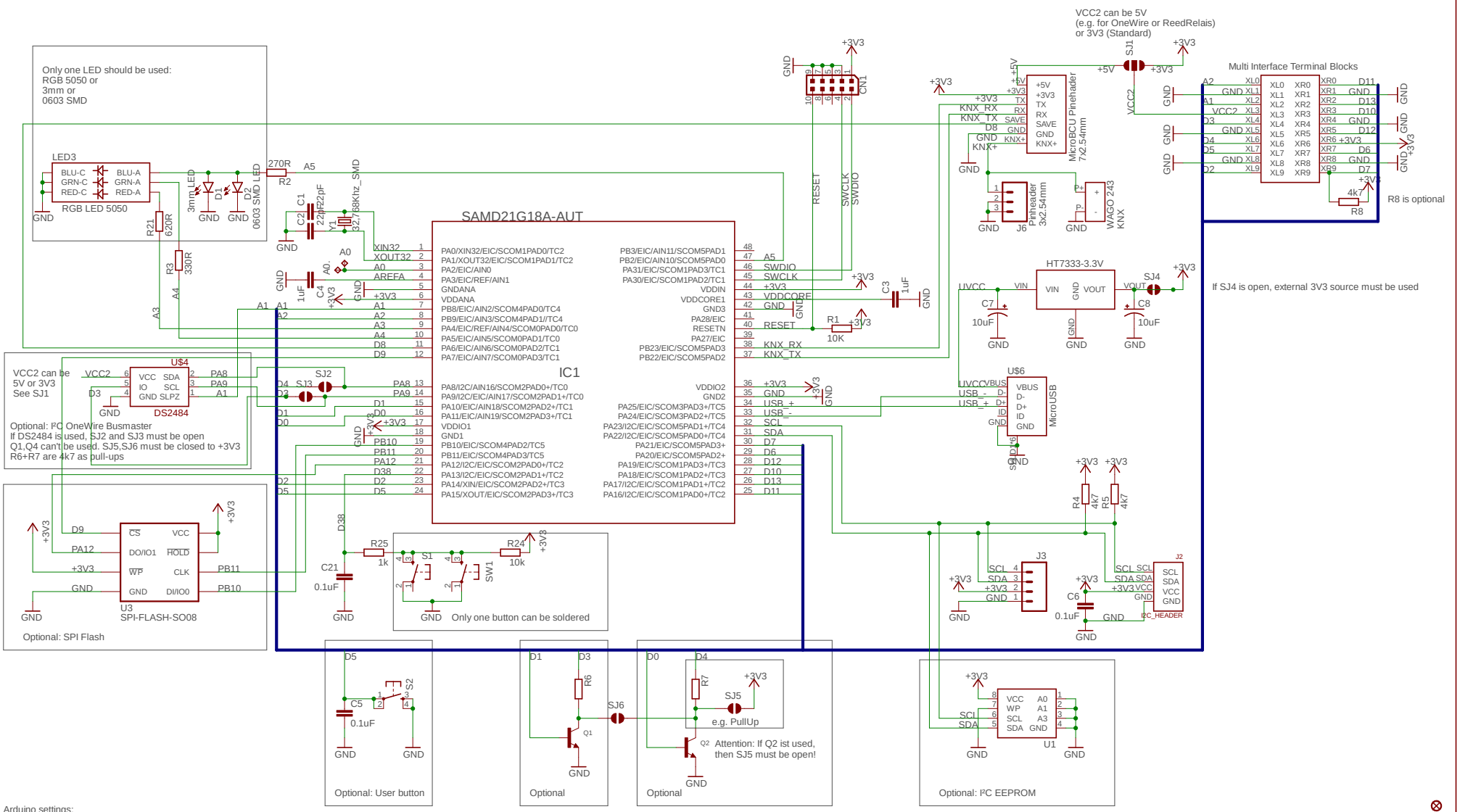

Arduino settings:
LED Blue: A5 (active HIGH)
LED Green: A4 (active HIGH)
LED Red: A3 (active HIGH)
KNX Serial: Serial
I²C: Wire (Standard)
SPI Flash: SPI (Standard) + D9=CS
Button: D38 (active LOW)
User Button: D5 (active LOW)
Mosfet 1: D1 (active HIGH)
Mosfet 2: D0 (active HIGH)
KNX SAVE: D8 (active LOW)

DS2484: new Wire on D4=SDA/D3=SCL must be created + A1=HIGH as voltage reference. If A1 ist LOW, DS2484 is in low current StandBy

TITLE: MI_R1.2_Schematic	
Document Number:	REV:
Date: 26.08.2018 19:38	Sheet: 1/1