ECN	Rev No.	Revision Note	Drafter	Checked	Date
N/A	6.70	Relayout	George		20161209

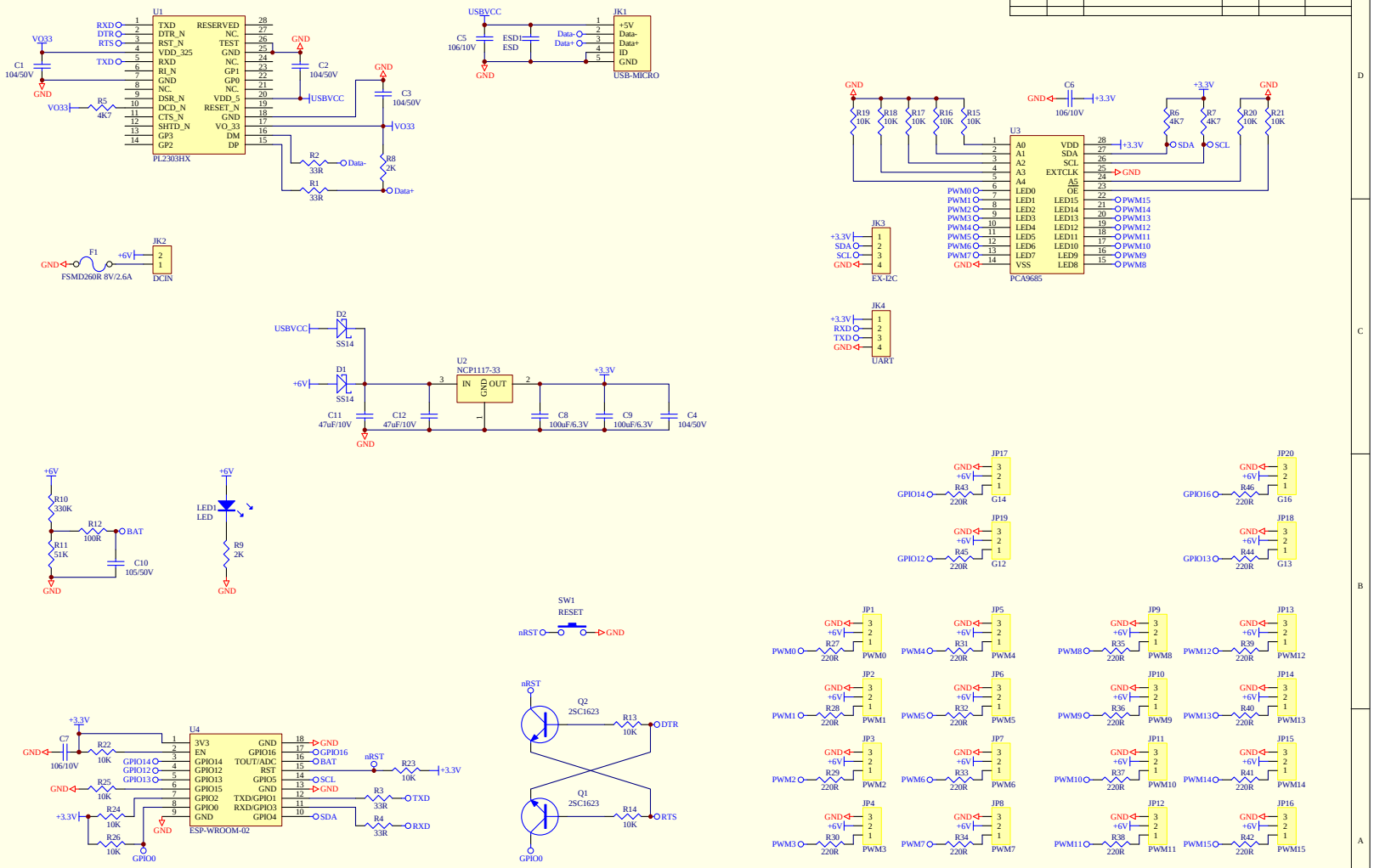

TEL:886-2-86672899 FAX:886-2-22181726	DRAFTER	George	Date 20161209
	DESIGNER	George	Date 20161209
Product: MiniPlan V6	CHECKED	--	Date --
Revision: 6.70 Date: 20161209	NAME	--	
Size: A3	DWG NO.		
Sheet of			