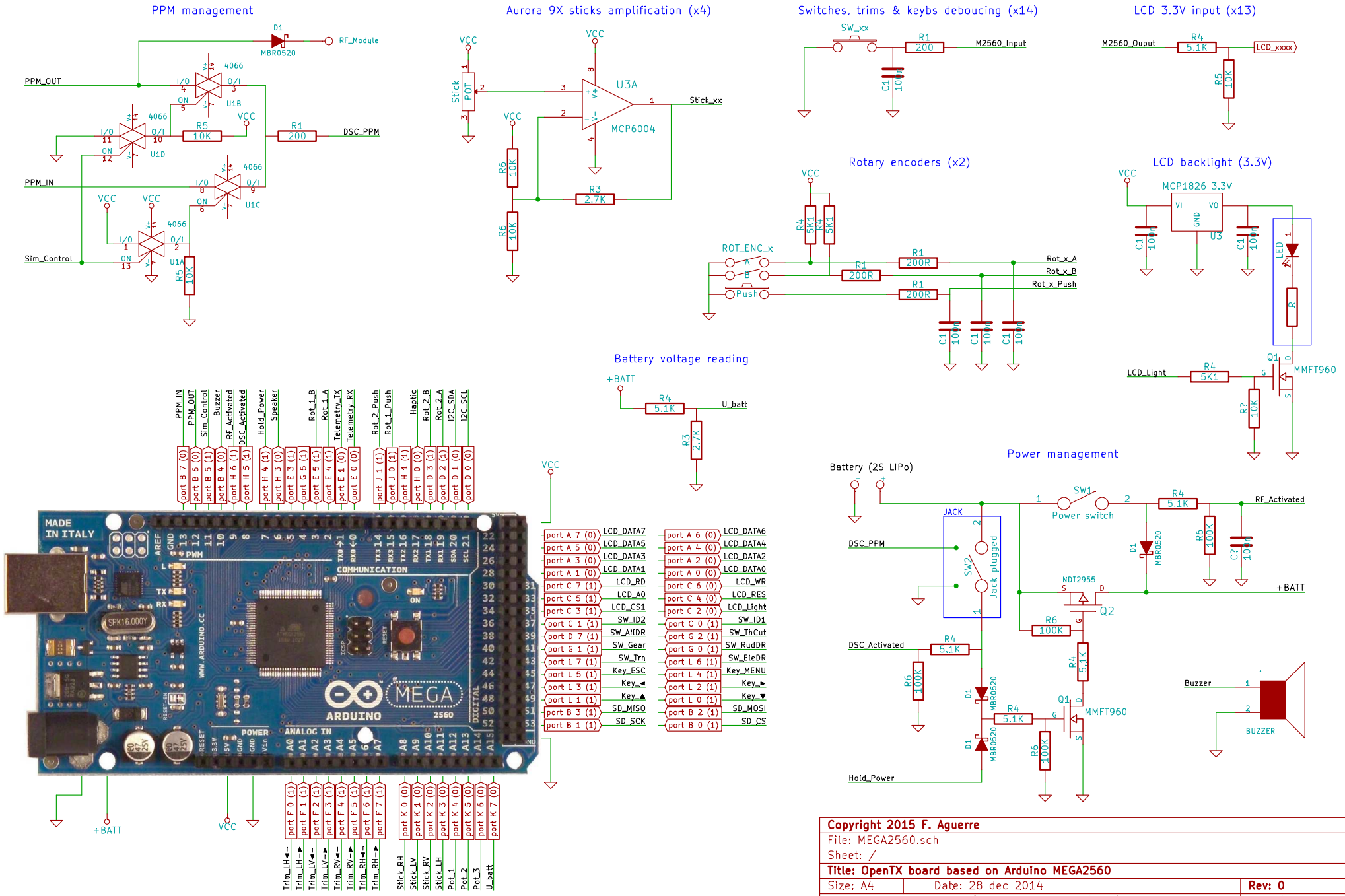
PPM management
Aurora 9X sticks amplification (x4)
Switches, trims & keybs deboucing (x14)
LCD 3.3V input (x13)
Rotary encoders (x2)
LCD backlight (3.3V)
Battery voltage reading
Power management
Battery (2S LiPo)
Copyright 2015 F. Aguerre
File: MEGA2560.sch
Sheet: /
Title: OpenTX board based on Arduino MEGA2560
Size: A4
Date: 28 dec 2014
Rev: 0
KiCad E.D.A. eeschema (2013-07-07 BZR 4022)-stable
Id: 1/1