PPM management

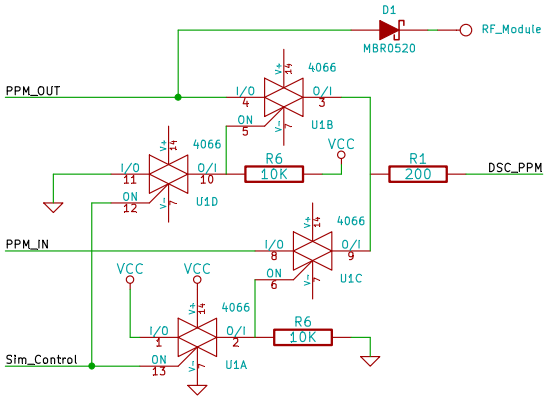

Aurora 9X sticks amplification (x4)

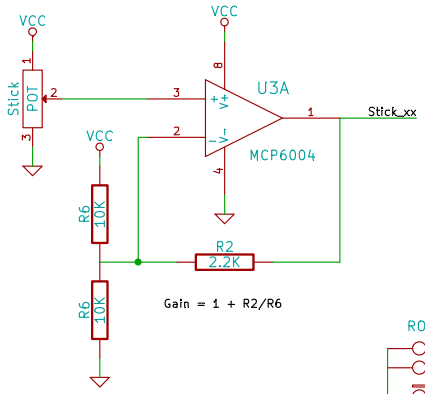

Switches, trims & keybs deboucing (x22)

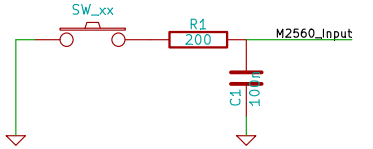

LCD 3.3V input (x13)

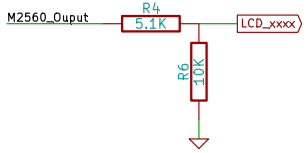

Rotary encoders (x2)

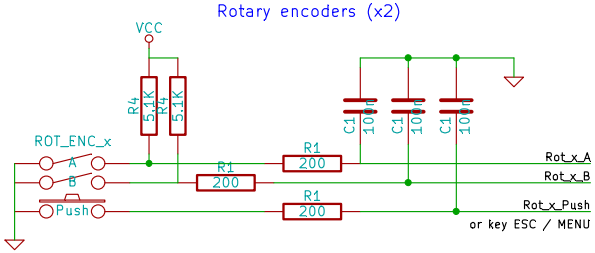

LCD backlight (3.3V)

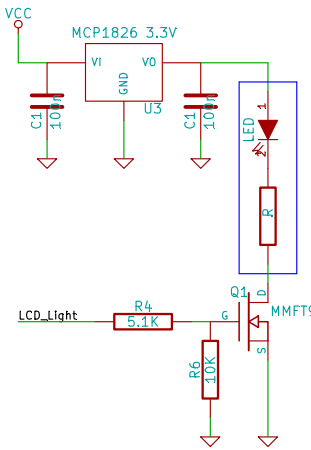

NOTA : all features are optional !
M2560 can properly work without switch deboucing, stick voltage protection, rotary encoder or PPM / power management.
Minimum requirement is just LCD and navigation keys. Some switches could be usefull, especially for flight conditions, but not fundamental.

Battery voltage reading

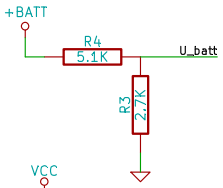

Stick anti-jitter filter

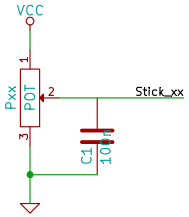

LCD direct backlight (5V, 20 mA)

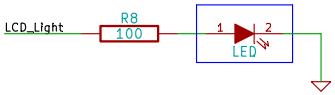

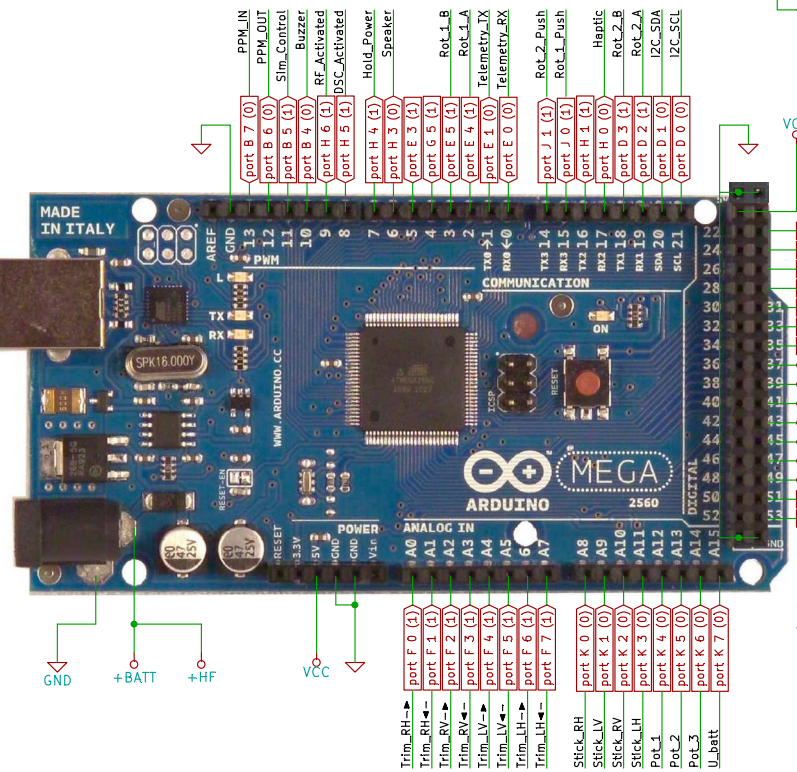

LCD supported : ST7565P, ST7565R, ERC12864FSF, ST7920
Protocol = 6800, 8 bits parallel mode

LCD pinout labels (may differ, depending of brand) :
RD = Read or Enable on ST7920
WR = WRite or Write(0)/Read(1) on ST7920
A0 = R/S (register select) or D/I (data/Instruction select)
RST = RES (reset)
CS = Chip Select (not used on ST7920)

Power management

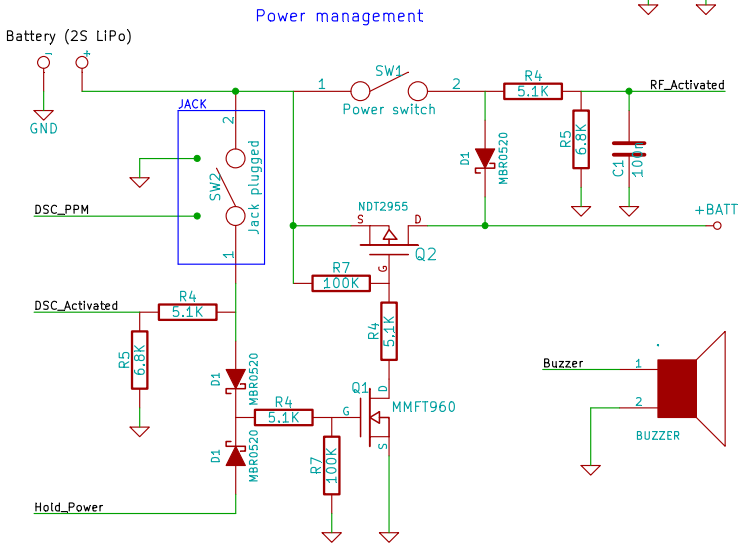

Pinout caption :

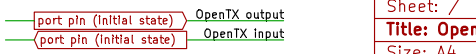

Copyright 2015 F. Aguerre

File: MEGA2560.sch
Sheet: /

Title: OpenTX board based on Arduino MEGA2560

Size: A4	Date: 6 jun 2015	Rev: 0
KiCad E.D.A. eeschema (2013-07-07 BZR 4022)-stable		Id: 1/1