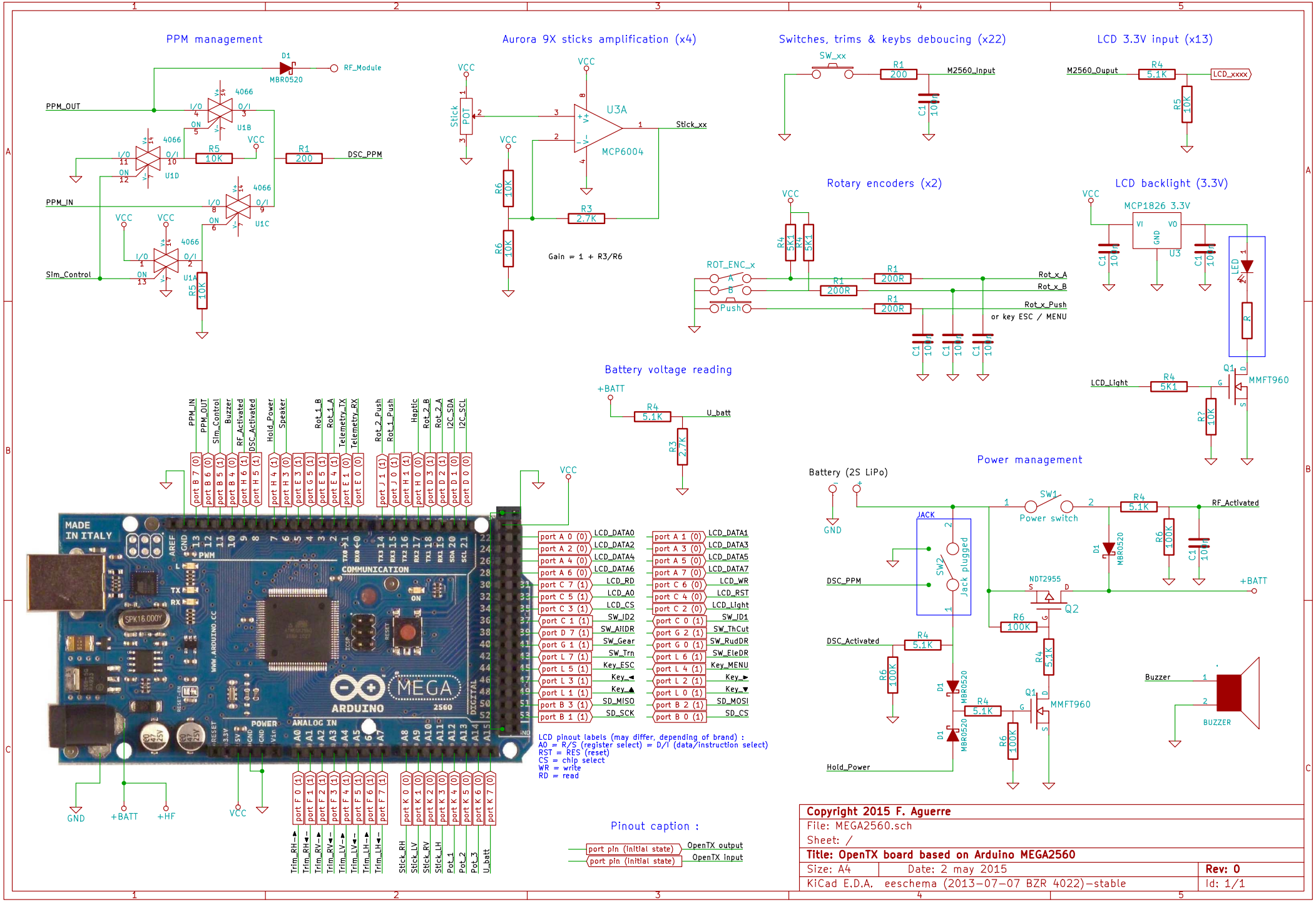

Copyright 2015 F. Aguerre

File: MEGA2560.sch

Sheet: /

Title: OpenTX board based on Arduino MEGA2560

Size: A4	Date: 2 may 2015	**Rev: 0**
KiCad E.D.A. eeschema (2013-07-07 BZR 4022)-stable		Id: 1/1