Power Delivery

Based on slides from tutorial by Visvesh Sathe and Shiddhartha Das

Outline

- Opening Remarks
- Understanding supply noise
  - Power supply delivery – A case study
- De-coupling capacitance
- Microarchitecture techniques
- Break (5m)
- Adaptive Clocking
  - Generation: Intel Nehalem
  - Generation: AMD Steamroller
  - Distribution: Qualcomm
- Integrated Voltage Regulation

Margins in Design

Margins in Design

CLOCK JITTER

- cycle to cycle jitter
- PLL + clock tree

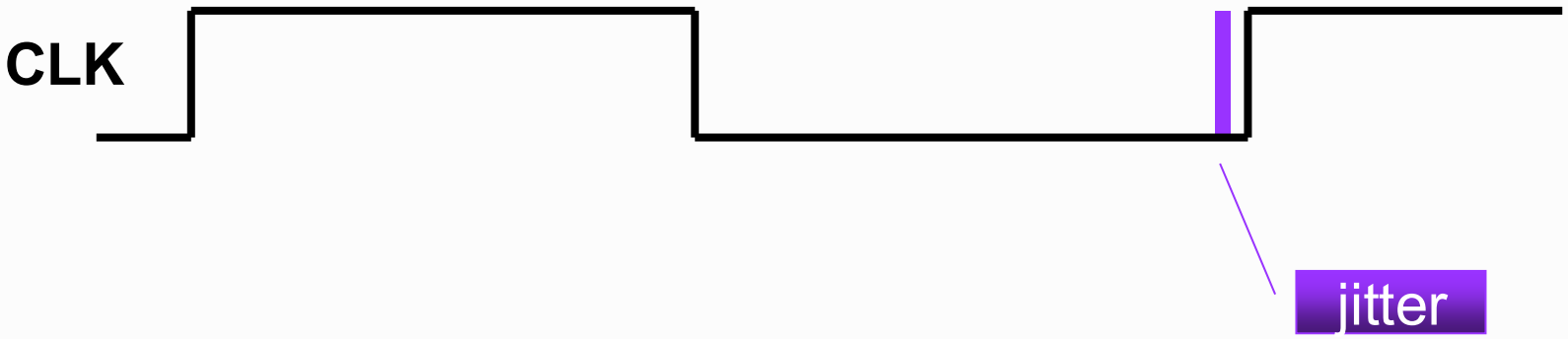

Margins in Design

COUPLING NOISE

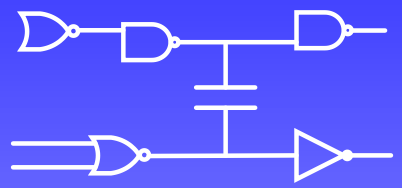

- capacitive coupling between nets
- victim & aggressor both switch

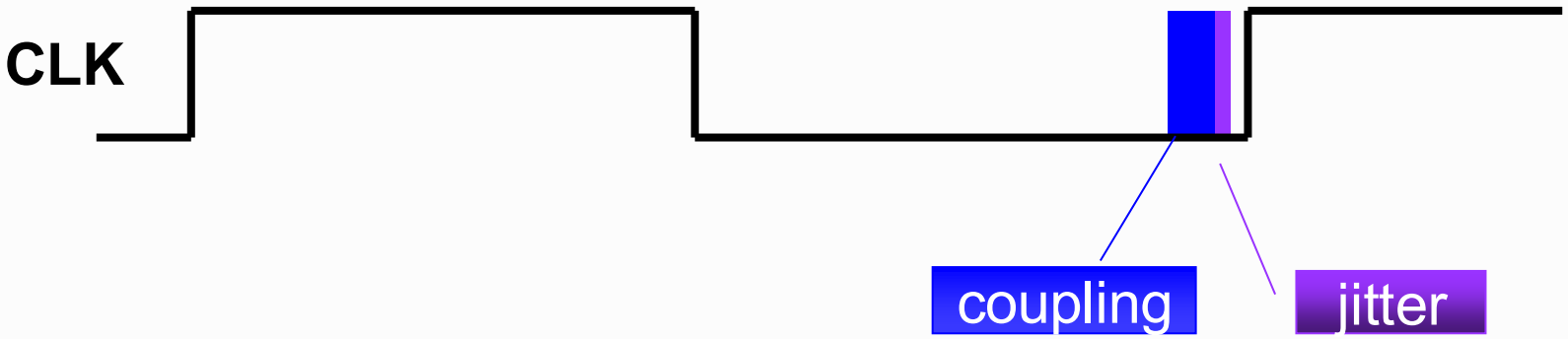

Margins in Design

TEMPERATURE

transistors
- temperature inversion
- -40ºC worse case

interconnect
- linear dependency
- 125ºC worse case

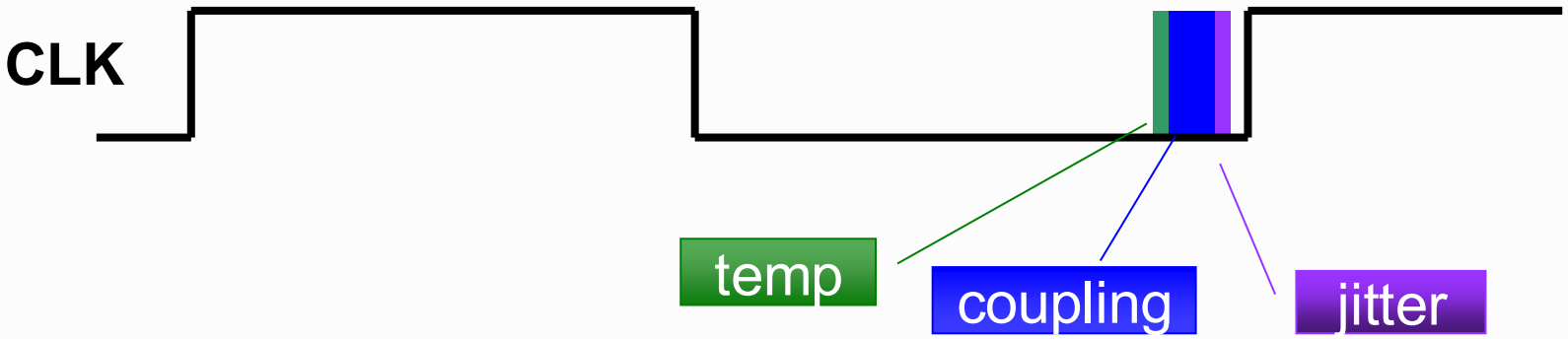

Margins in Design

VOLTAGE

VDD

- VRM offset
- regulator noise and response
- IR drop
- Ldi/dt drop

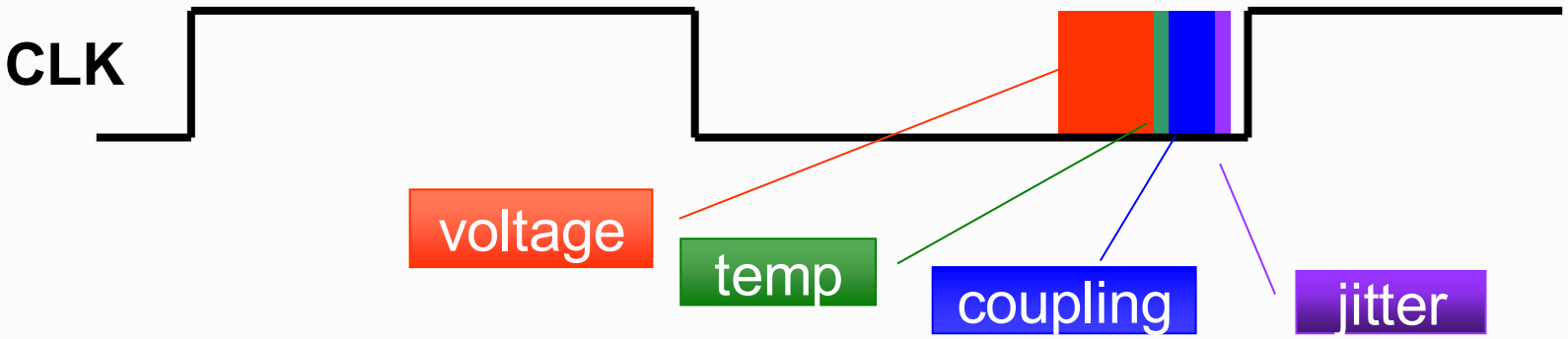

Margins in Design

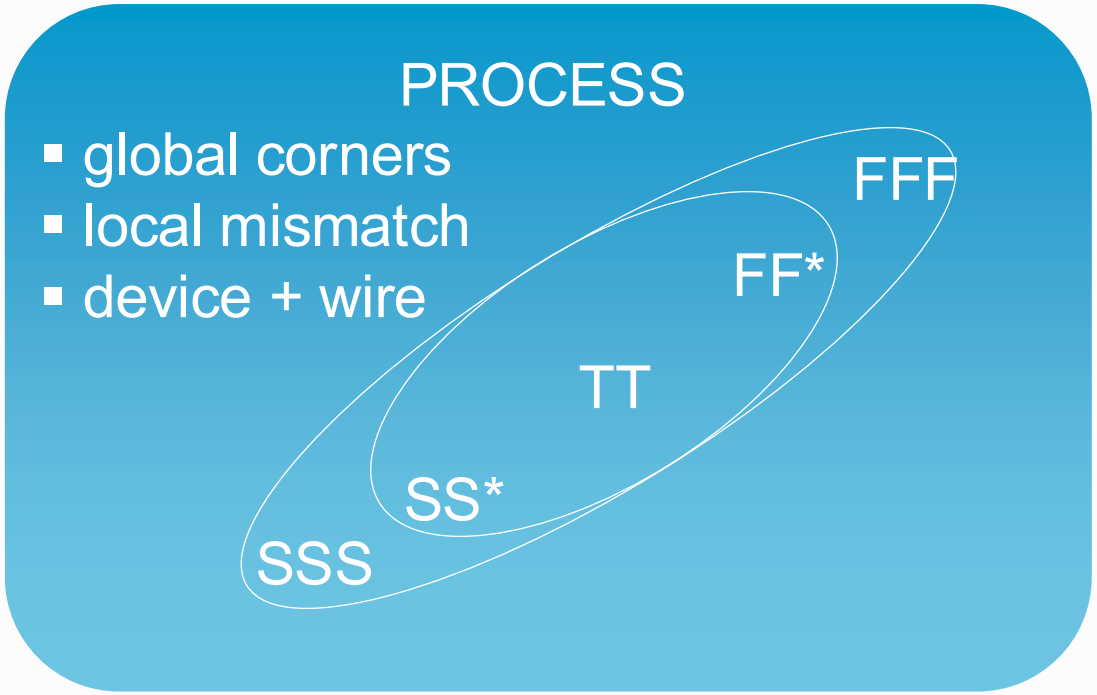

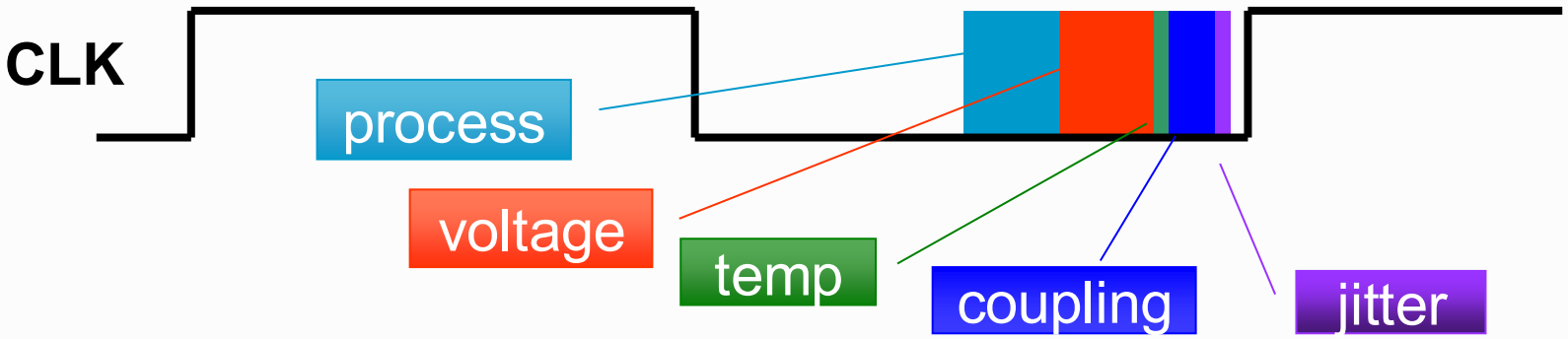

Margins in Design

SAFETY MARGIN

?

- human nature
- 2nd/3rd order effects
- “unknown unknowns”

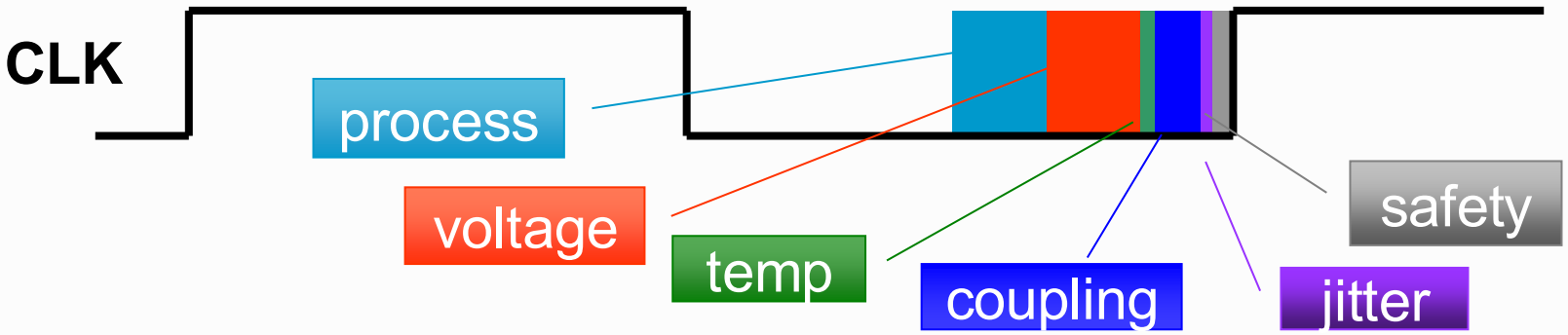

The State of Supply Noise in Modern SoCs

- High-Performance Design
  - $V_{dd} \rightarrow \alpha V_{dd} \Rightarrow I_{dd} \rightarrow I_{dd}/\alpha$
  - $Z_{targ} \rightarrow Z_{targ}/\alpha^2$ (For the same target VDD drop)

- Low-Power Design
  - $\downarrow V_{dd}$, $\uparrow V_{th}$
  - $\uparrow$delay sensitivity to supply noise
  - Increased voltage-domain count (finer V_{dd} control)
  - Supply noise significantly impacts performance

- **Supply distribution network, supply noise are critical**

Design Margins - Taxonomy

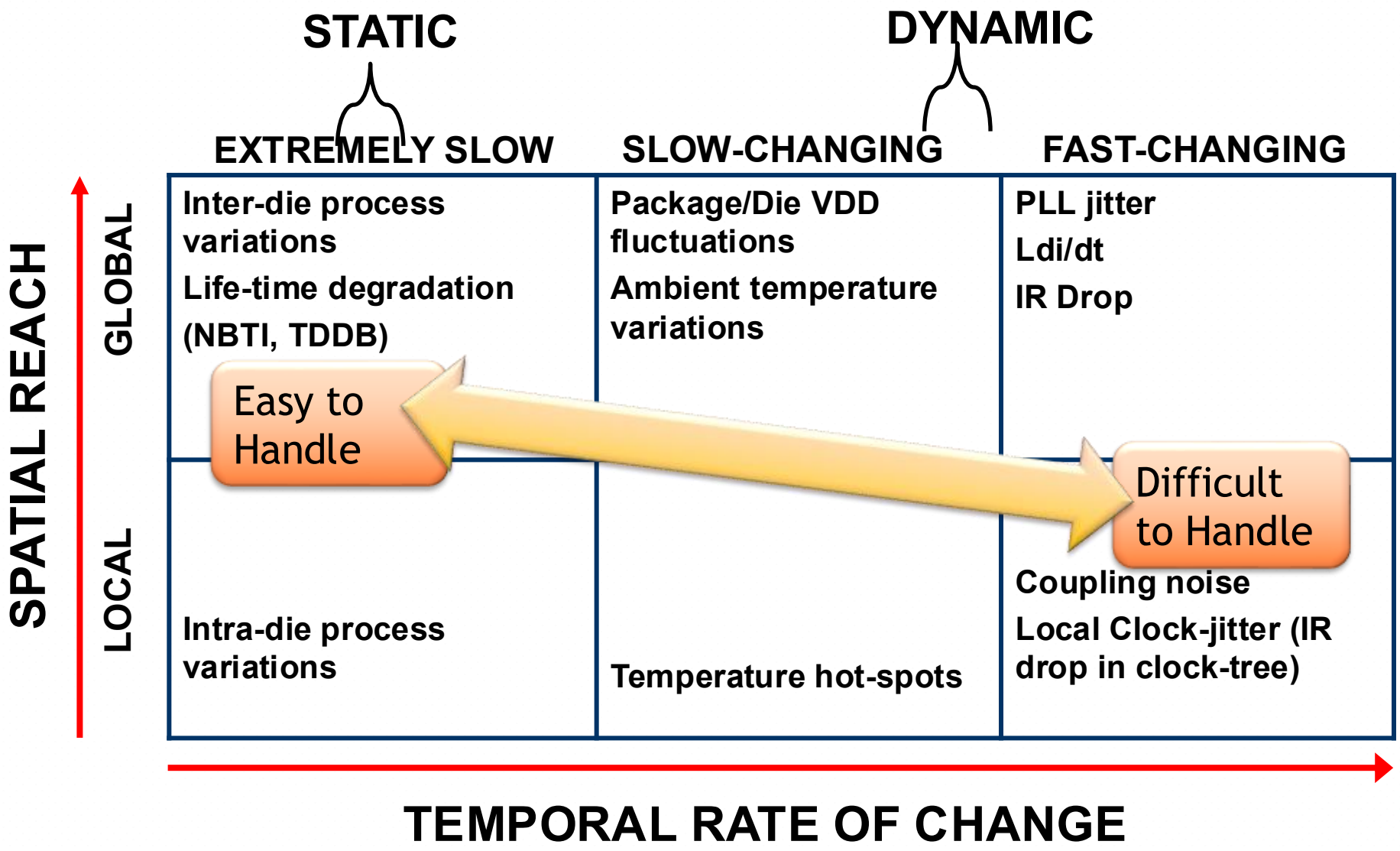

Energy-Efficient Design: Traditional Approaches

- Industry: Other approaches prioritized till recently
  - Continued scaling
  - Clock gating
  - Power gating
  - DVFS
  - Multi-V_{th}

- Academia, focus on more exotic approaches
  - Adiabatic logic / Charge-recycling techniques
  - Super-pipelining (voltage-scaling)
  - Low-power logic topologies

Voltage Margins: Challenging Perceptions

- Industry
  - Traditionally recognized importance but…
  - Until recently, not addressed as a design problem
  - Mitigated using binning and test
- Academia
  - Largely unheralded
  - Not seen as highly impactful effort in low-power design
- Reality
  - Dominant source of inefficiency
  - Solutions (particularly supply noise) span variety of areas (PDN design, Voltage Regulation, Clocking, Micro-architecture)

Outline

- Opening Remarks
- **Understanding supply noise**
  - Power supply delivery – A case study
- De-coupling capacitance
- Microarchitecture techniques
- Break (5m)
- Adaptive Clocking
  - Generation: Intel Nehalem
  - Generation: AMD Steamroller
  - Distribution: Qualcomm
- Integrated Voltage Regulation

Power Delivery Network

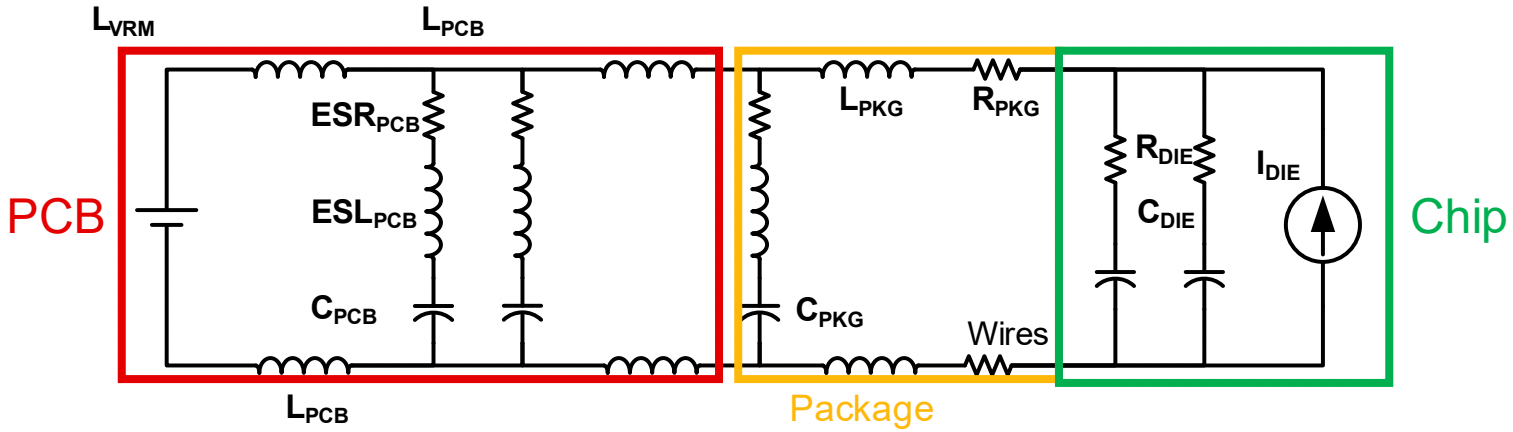

$$\Delta V_{die}(t) \cong 2\,\mathrm{I}_{max} R + \mathrm{I}_{max}\sqrt{\frac{2L_{pkg}}{C_{die}}}\,e^{-\frac{R}{2L_{pkg}}t}\,\sin(\omega_r - \theta)$$

DC IR Drop

AC Ldi/dt Droop

Reduced by

Additional metallization

On-die decap insertion, Cdie↑
Reduce Lpkg

Understanding Decap

1. DC Ic
2. AC Ic (frequency range)
3. What does a real Decap look like?
4.
5.
6. What does a chip look like?
-> routing/package

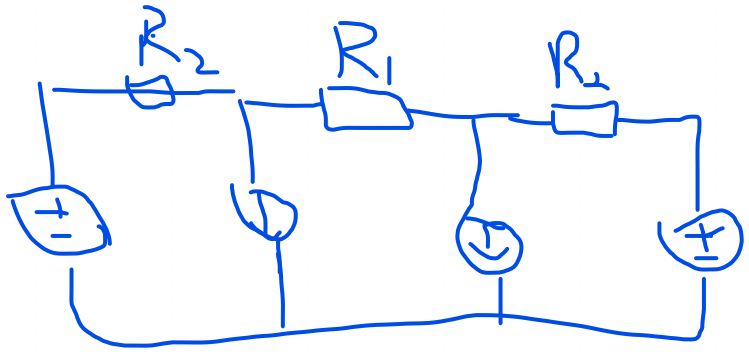

"logic" view

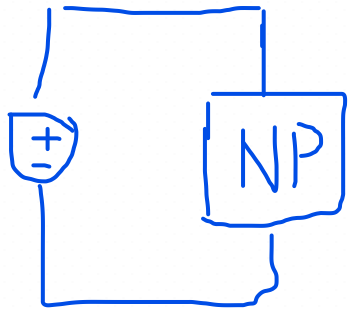

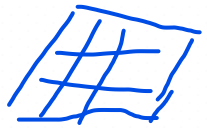

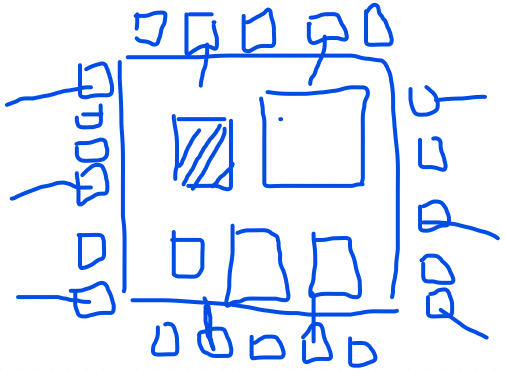

1. Can have lowest possible Z
2. Don't forget VSS

"LD" Resistive drop

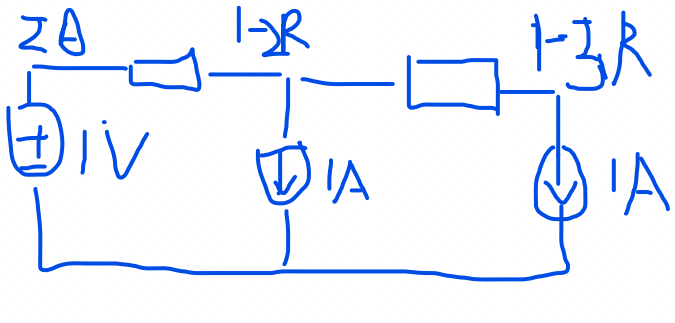

Power Delivery Network

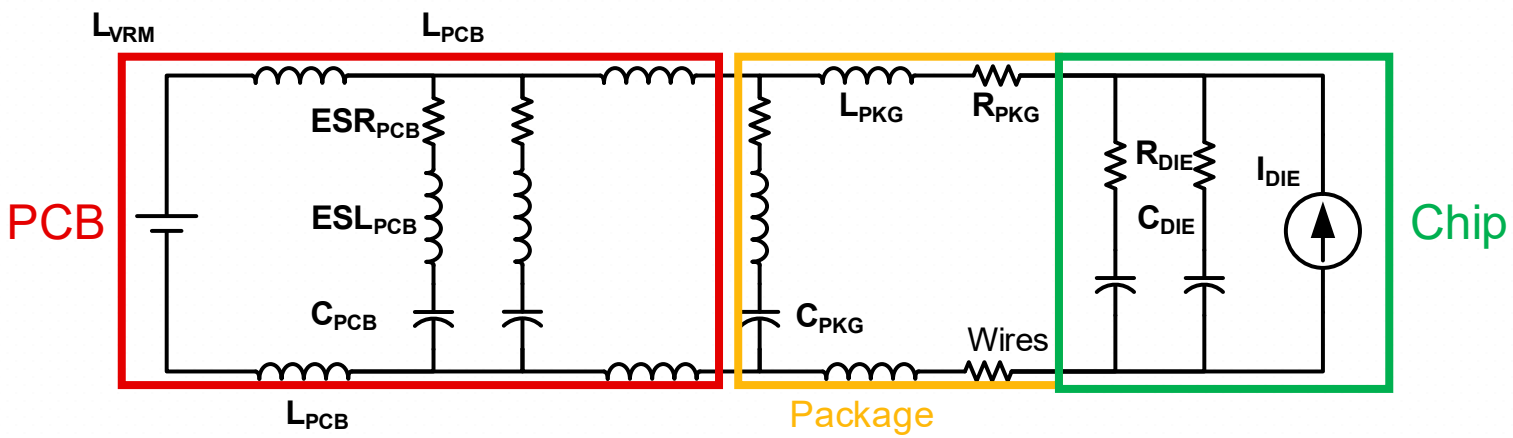

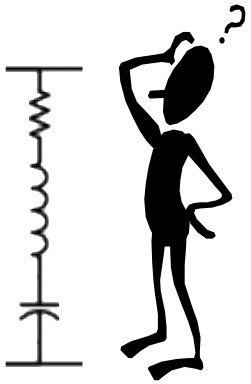

Wait – what's this RLC?

$$\Delta V_{die}(t) \cong 2\,I_{max}R + I_{max}\sqrt{\frac{2L_{pkg}}{C_{die}}}\,e^{-\frac{R}{2L_{pkg}}t}\sin(\omega_r - \theta)$$

DC IR Drop

AC Ldi/dt Droop

Reduced by

Additional metallization

On-die decap insertion, Cdie↑
Reduce Lpkg

Understanding Decap Parasitics

1. Routing L
2. ESL
3. AC tx fn

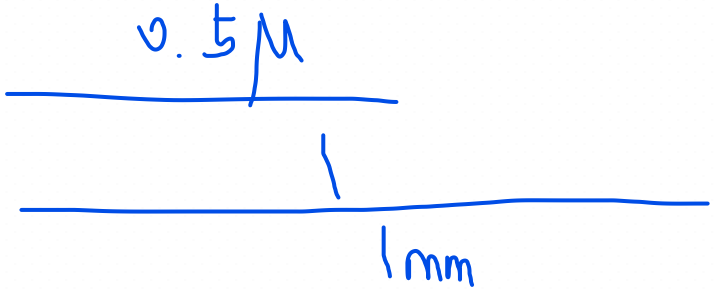

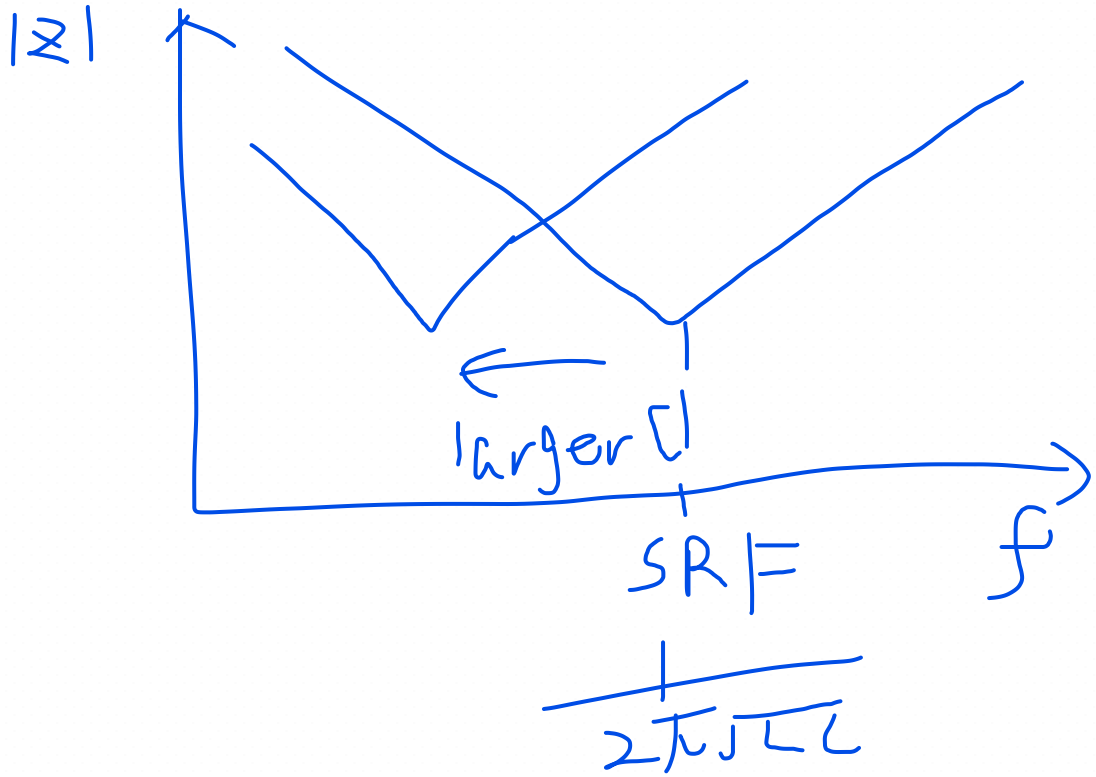

Supply Impedance – Frequency Domain

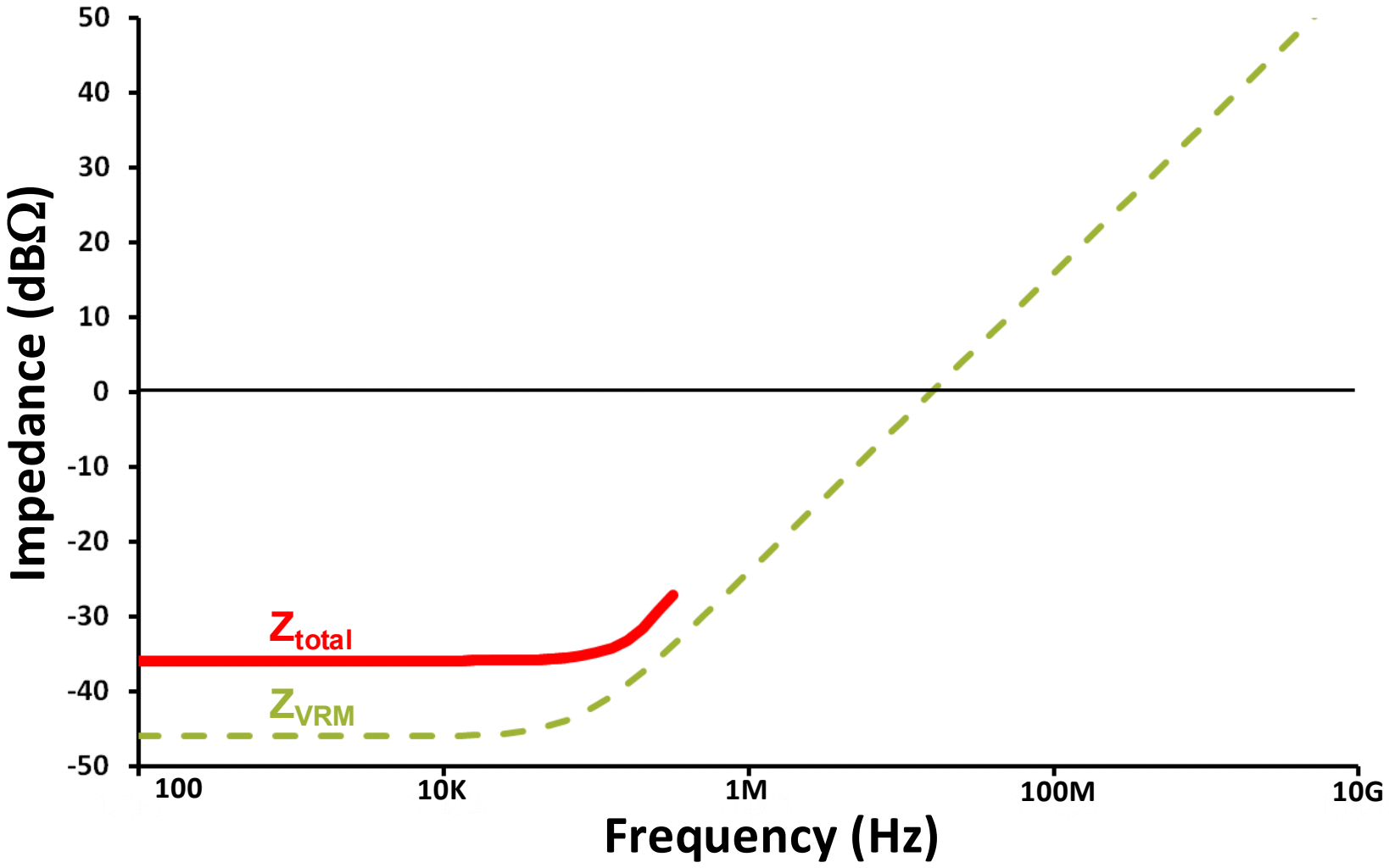

Supply Impedance – Frequency Domain

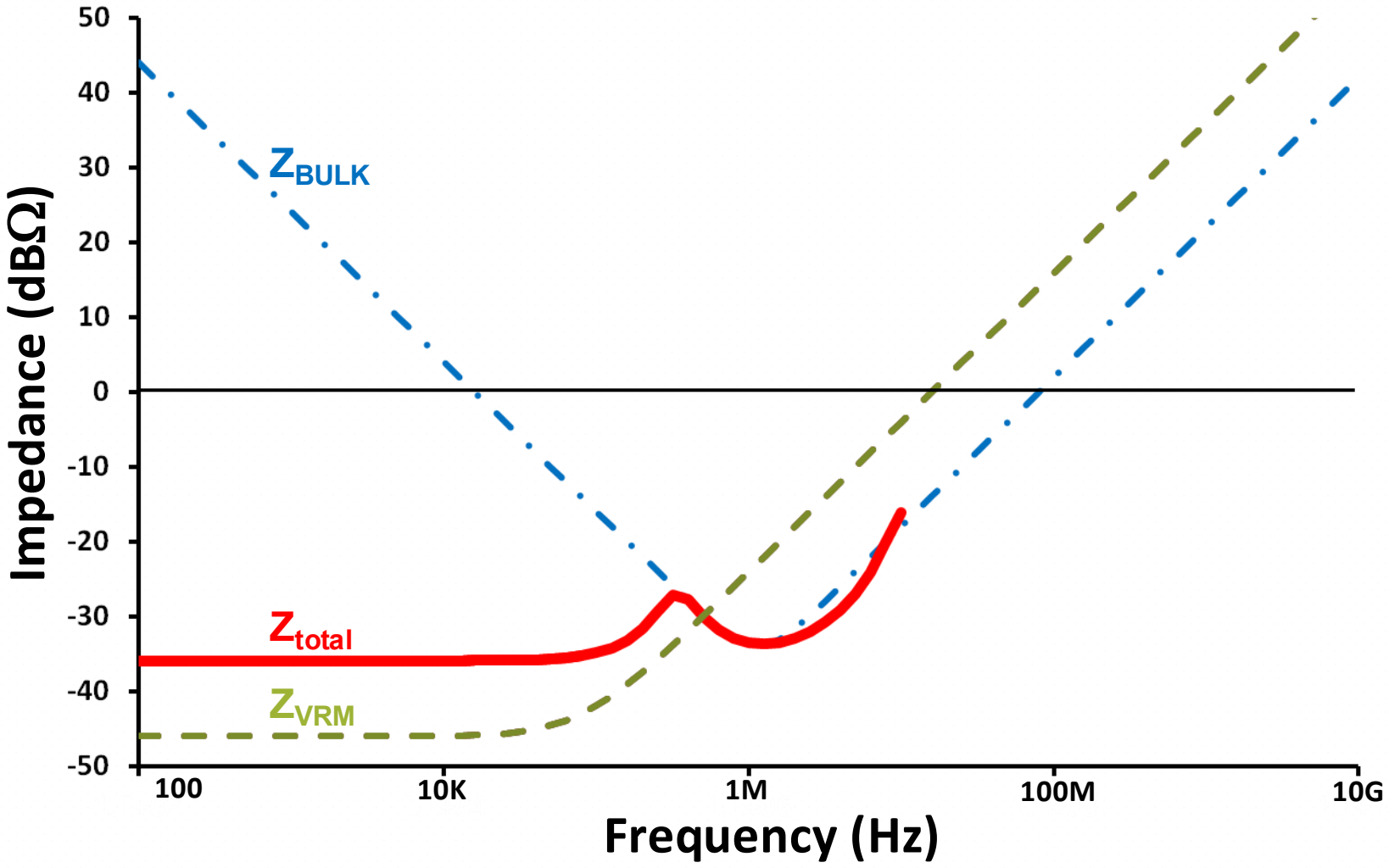

Supply Impedance – Frequency Domain

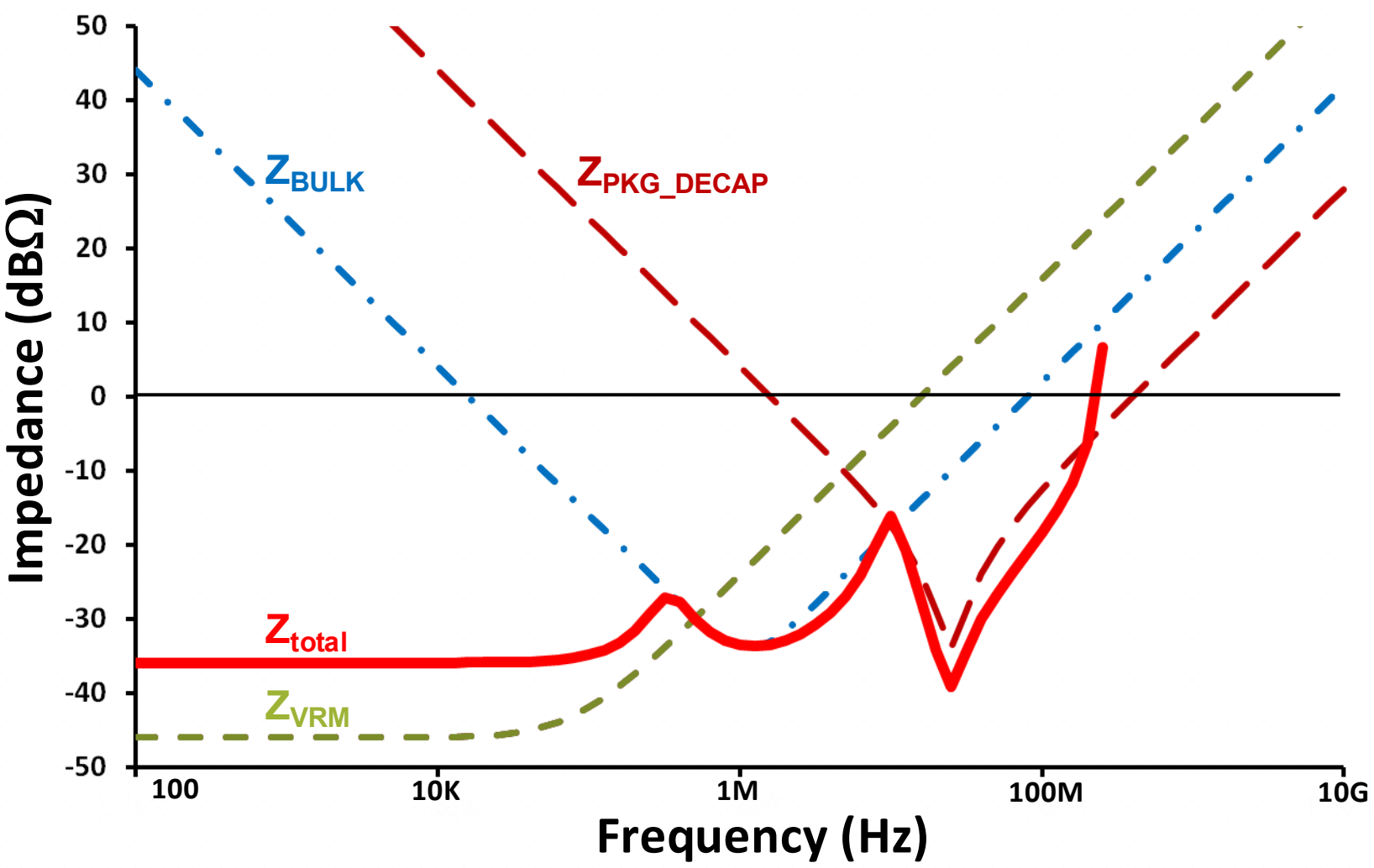

Supply Impedance – Frequency Domain

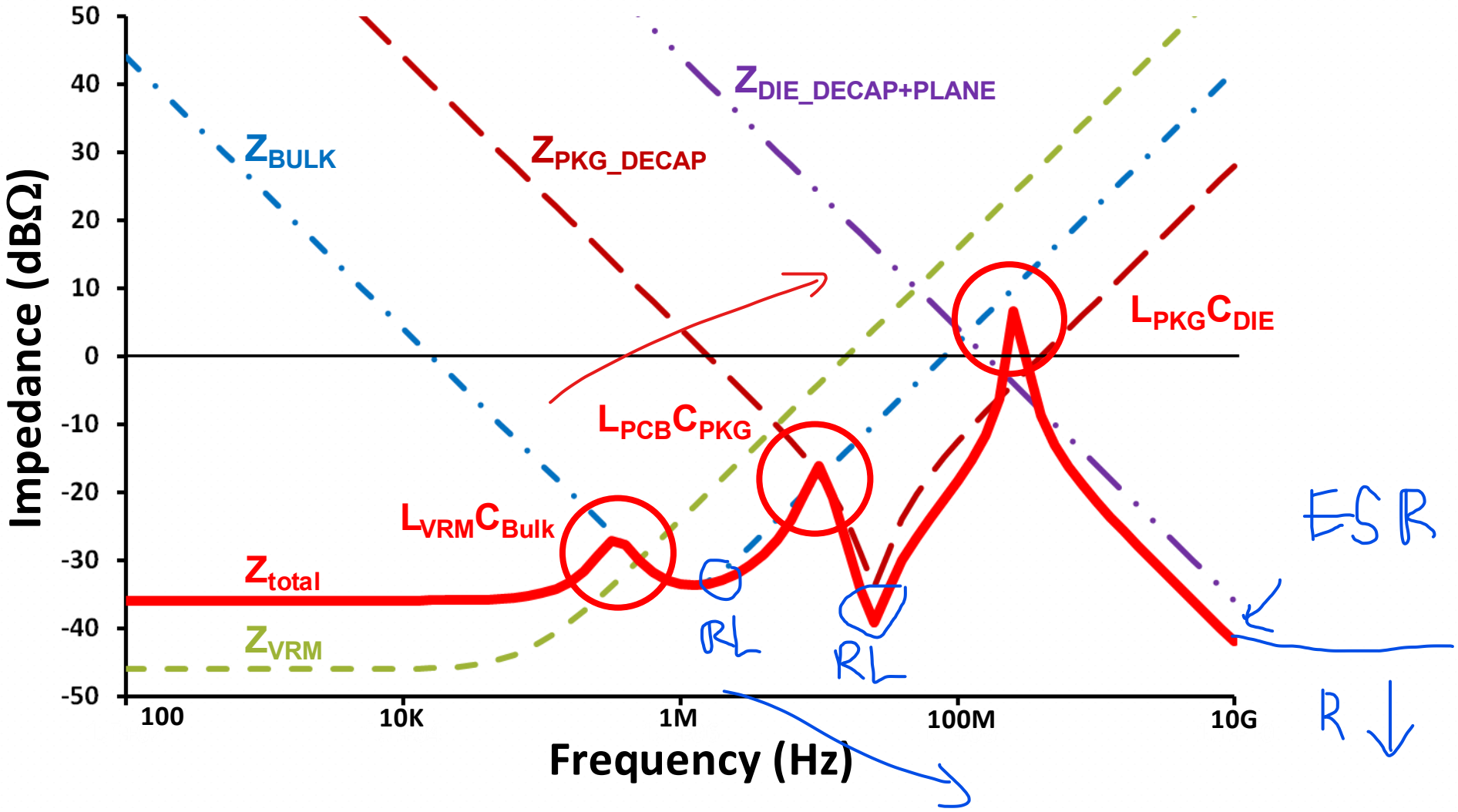

Supply Impedance – Frequency Domain

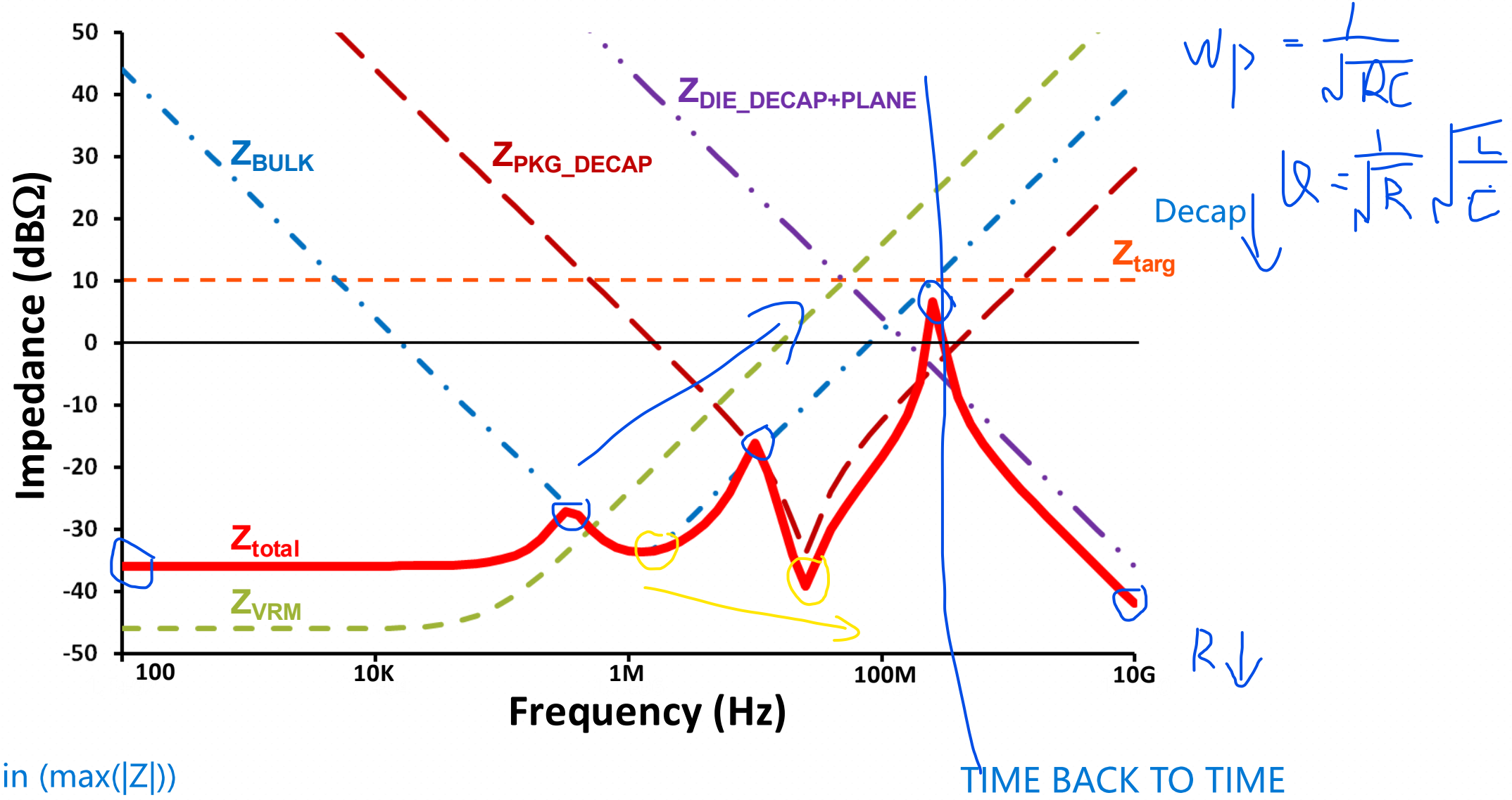

Object: min (max(|Z|))

Supply Impedance – Time Domain

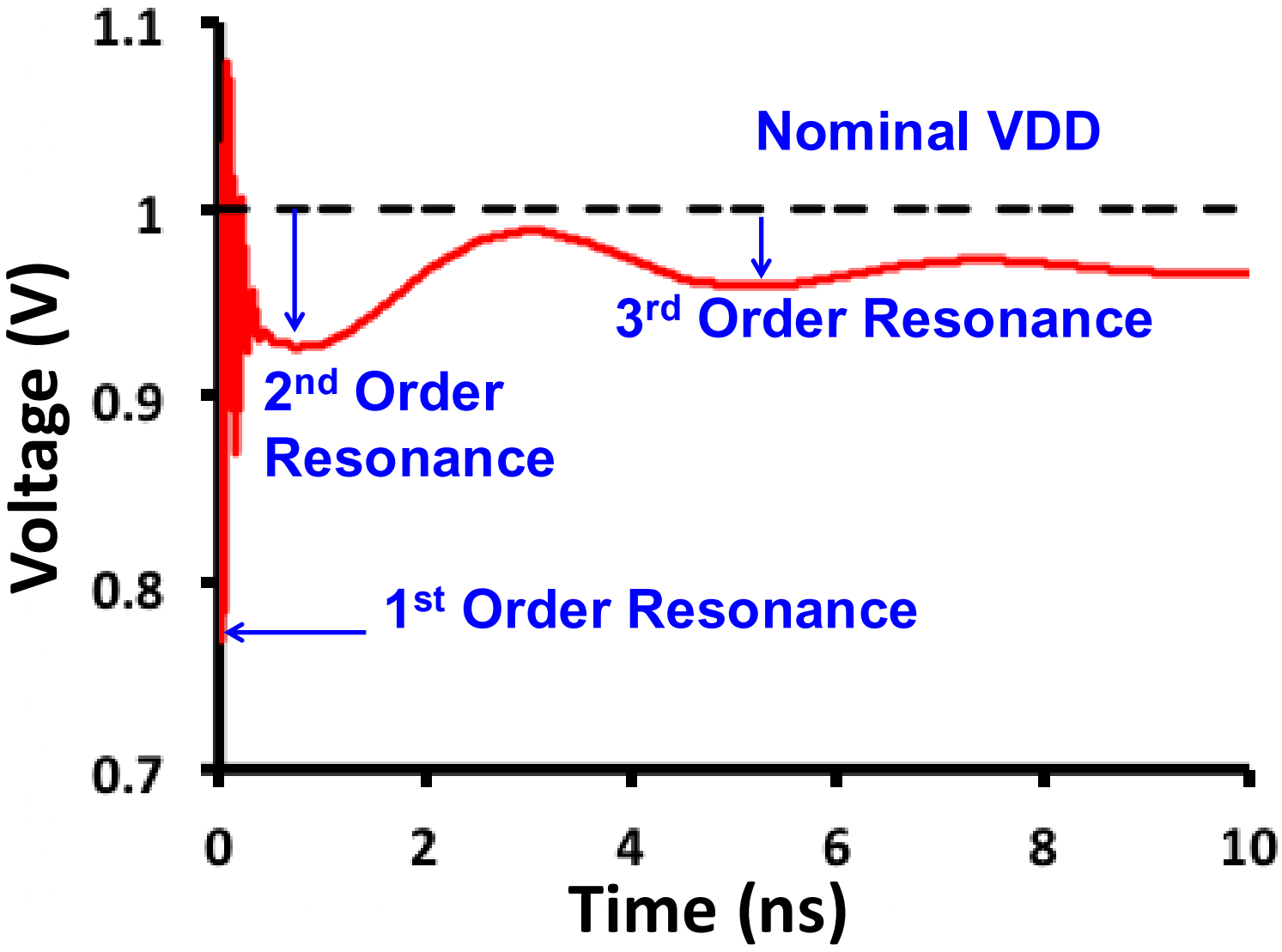

Supply Noise: Stimulus and Response

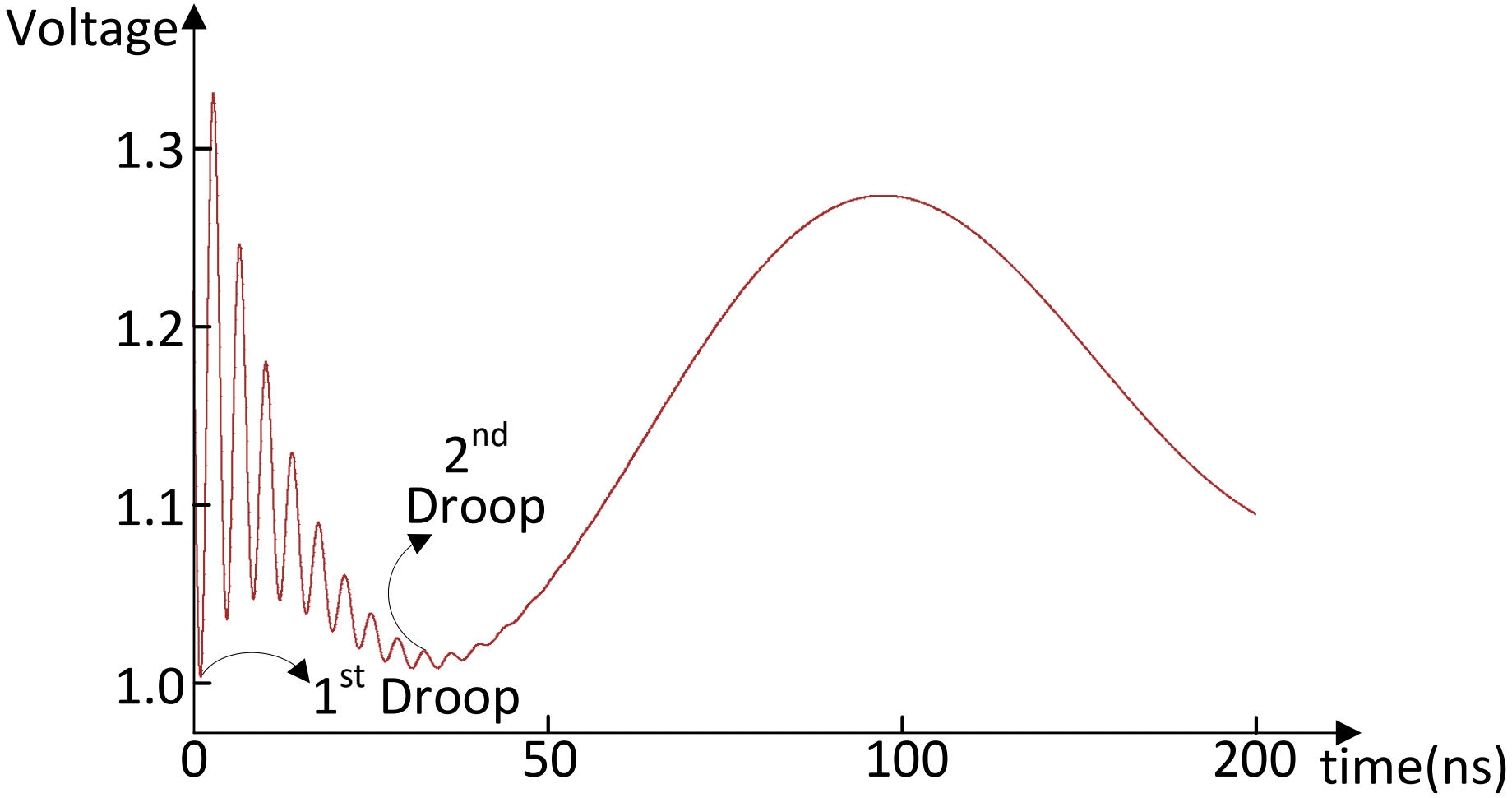

- Step response to current ramp
- Faster Ramp → Higher first droop

Power Delivery Network: Frequency Response

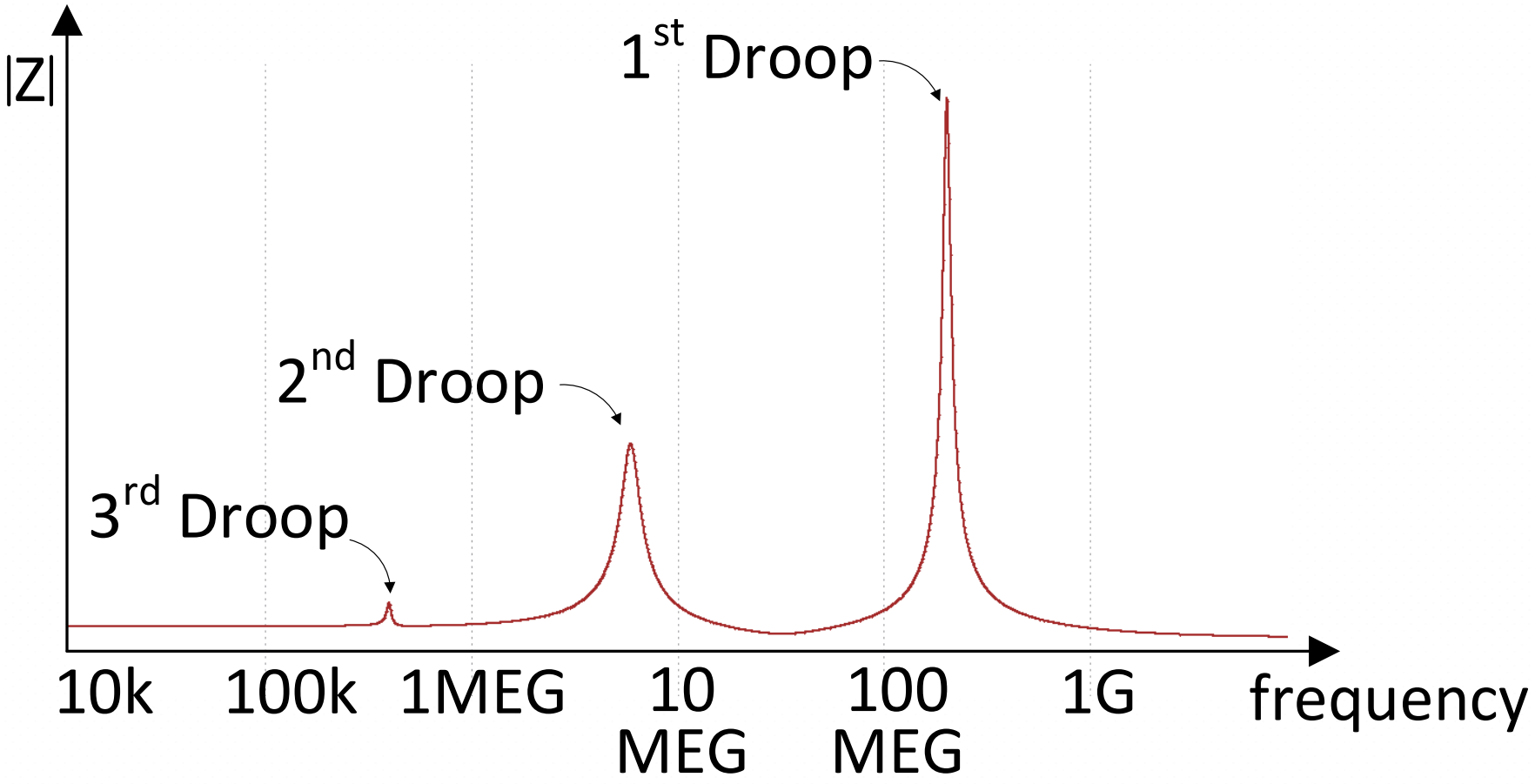

- Droops correspond to LC resonance with different passives in the network

Side-note High-density Decap

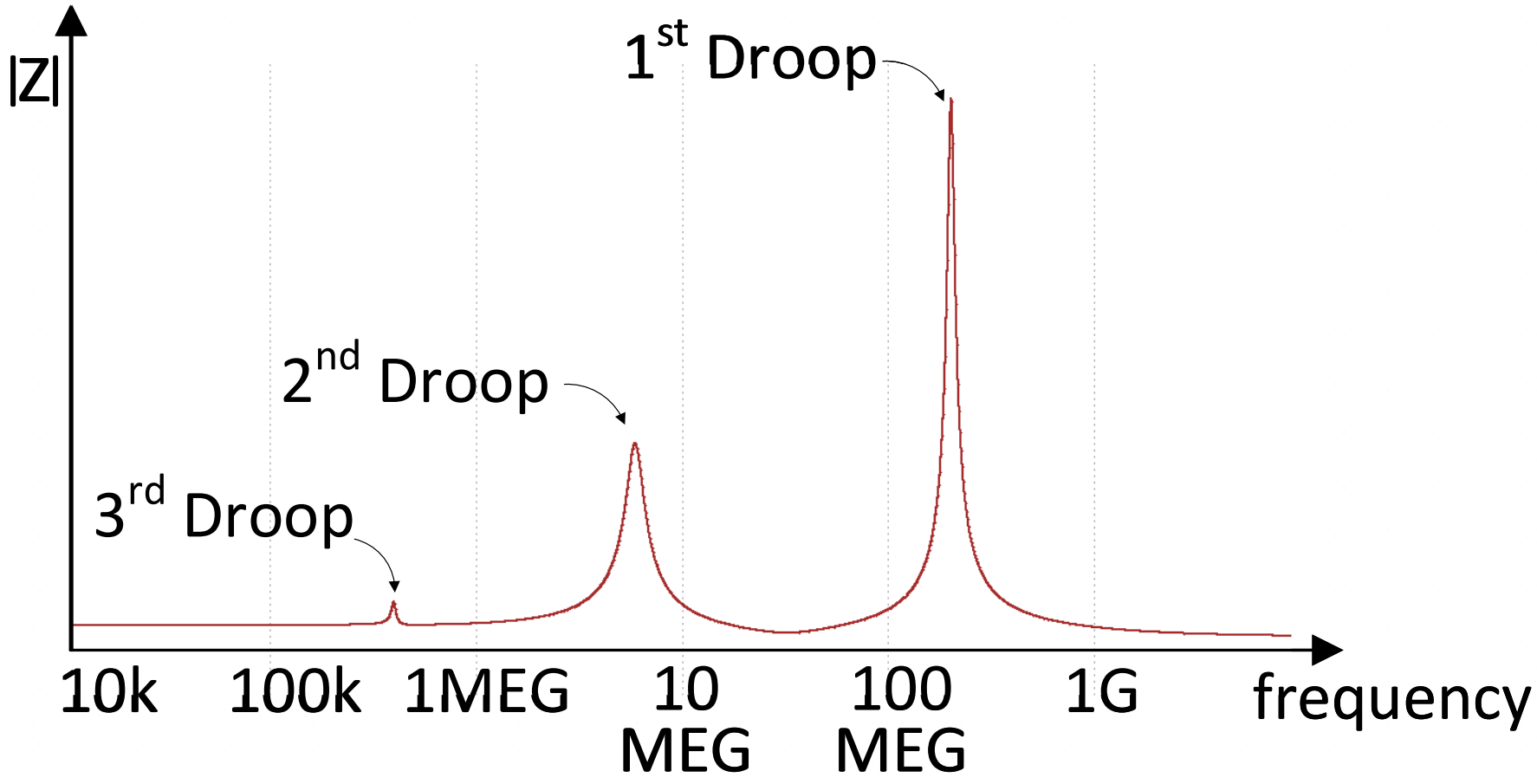

- Droops correspond to LC resonance with different passives in the network

High-density Decap

DTC

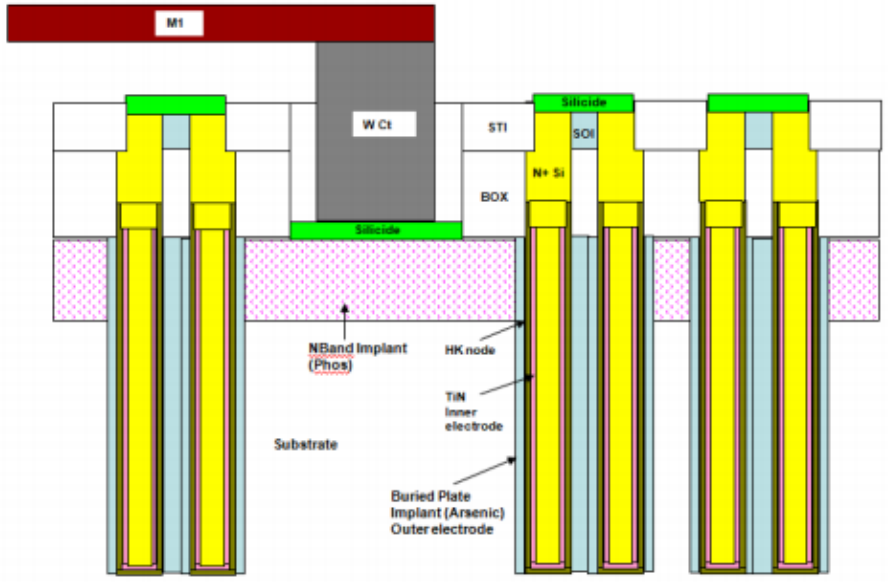

M1M

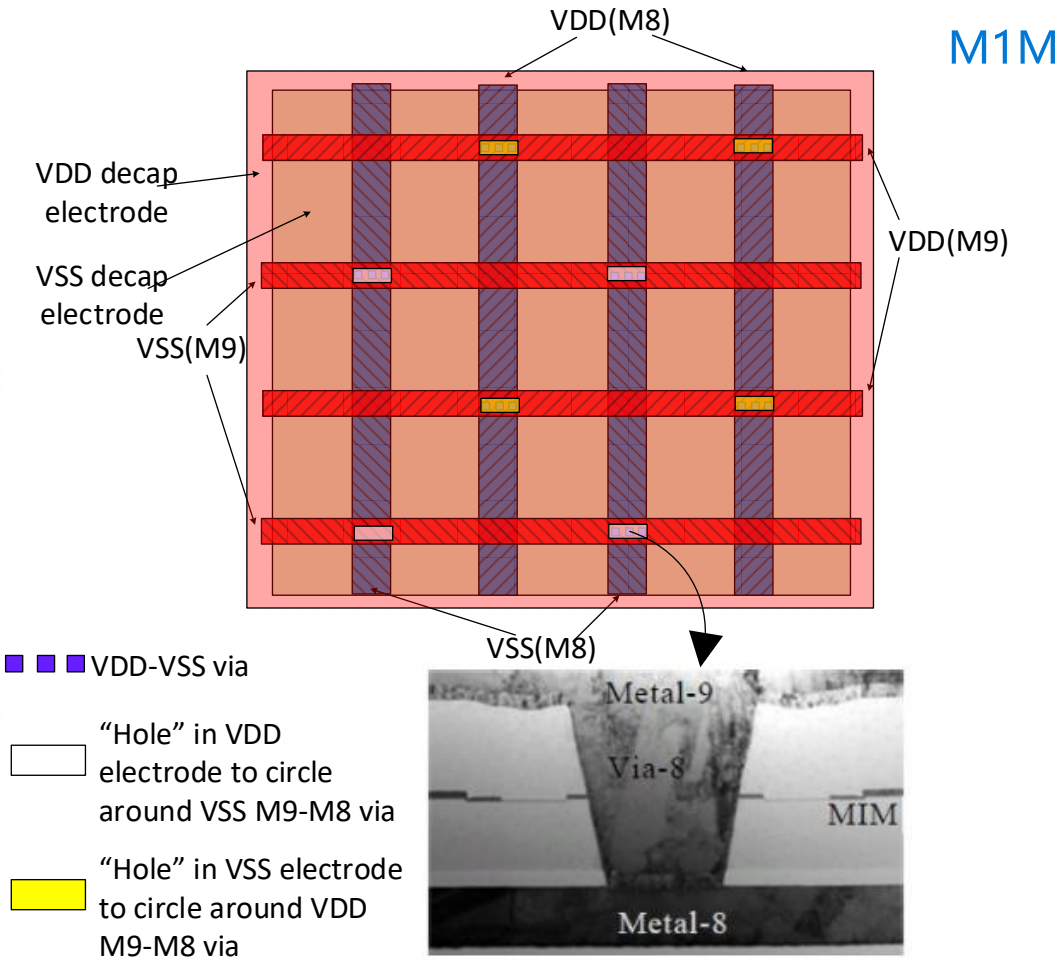

[7] B. Jayaraman, et al., ICICDT *2012*.

[7] C. Auth, et al., VLSI Tech. *2012*.

- Makes 1st droop slower, less significant
  - 2nd droop can be significant but easier to manage

High-density Decap

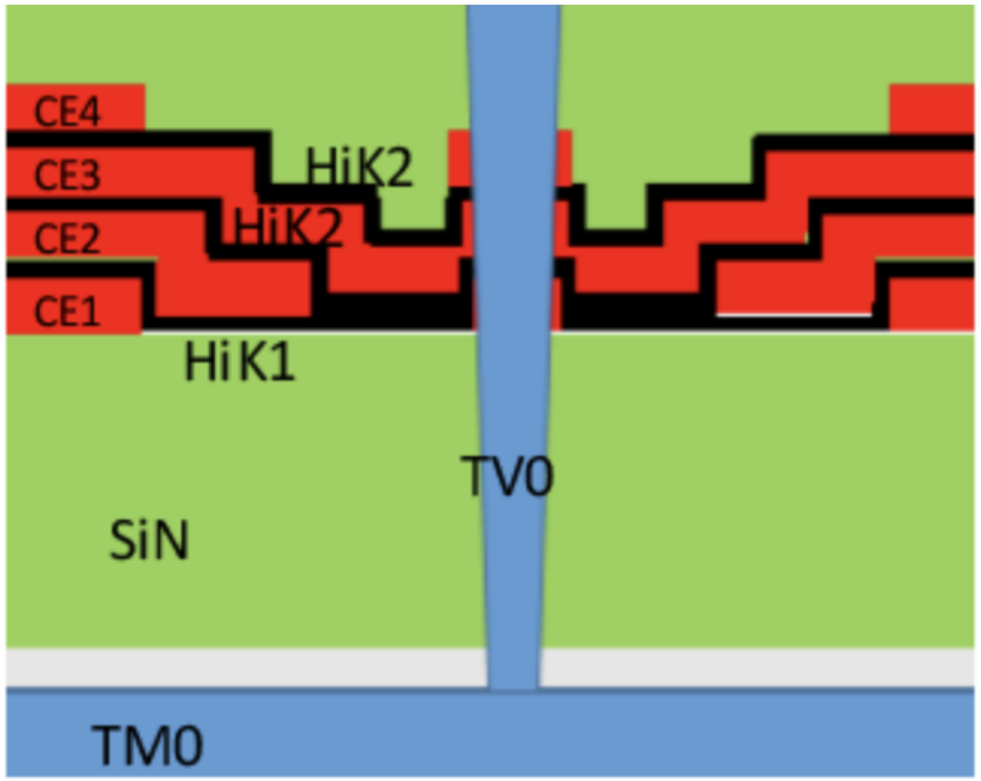

(a)

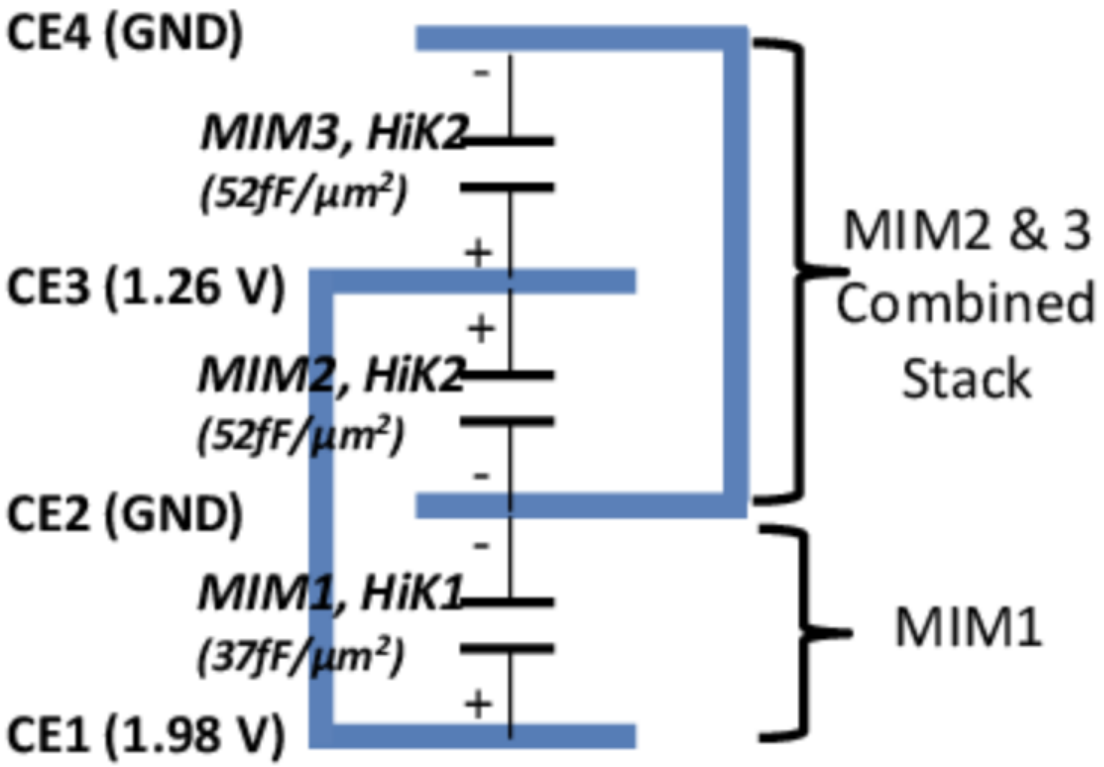

(b)

- MIM cap @500f/um^2 enabled by Hi-K Dielectrics
- Significant ESR

Mitigating Droop: Microarchitecture

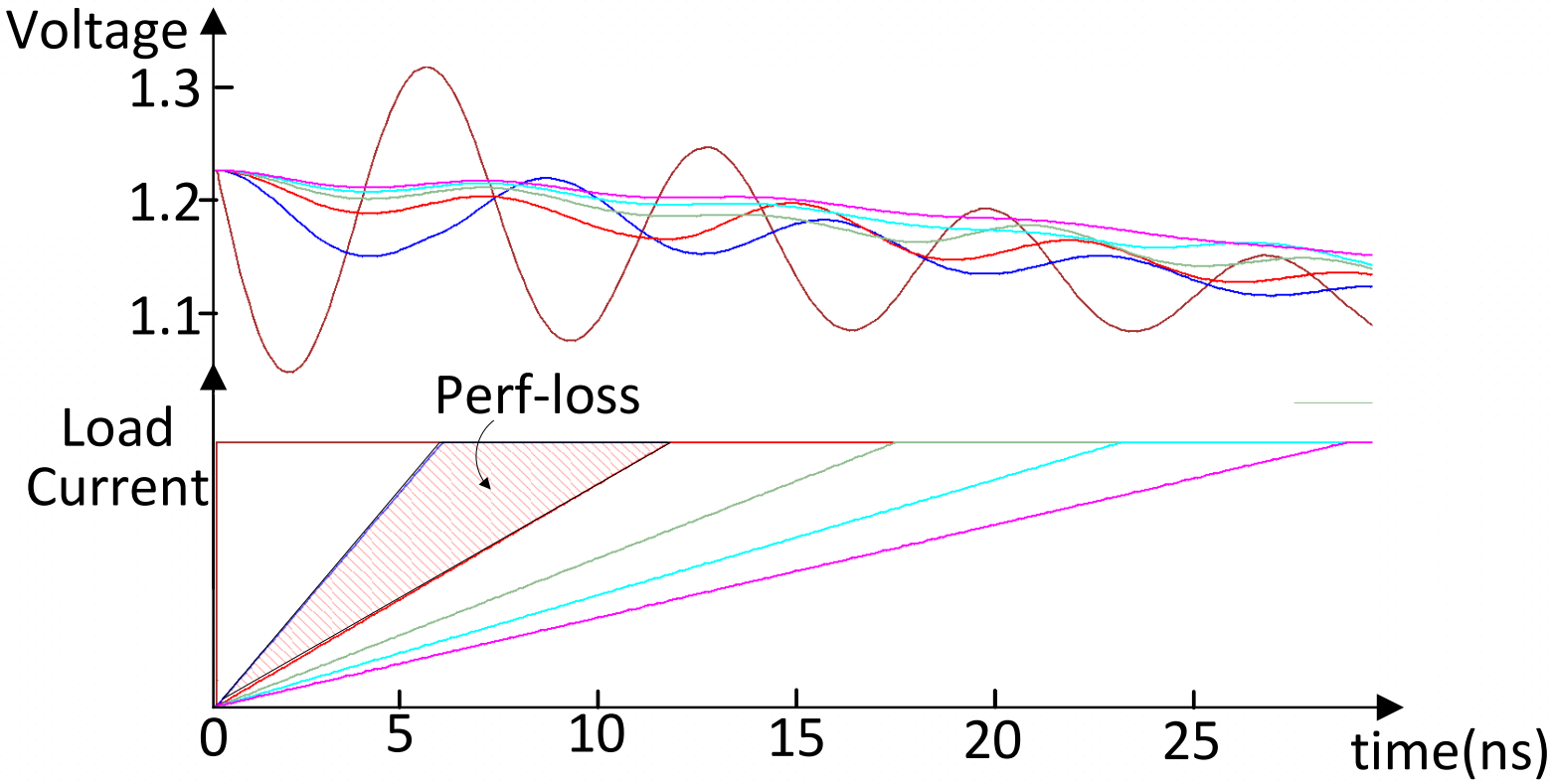

- Instruction throttling
  - Gradually fill compute pipeline (e.g. after a cache miss).
  - Slow ramp-up → Slow current build-up
  - Strongly diminishes 1st droop
  - Minor performance impact

Limitations of Throttling

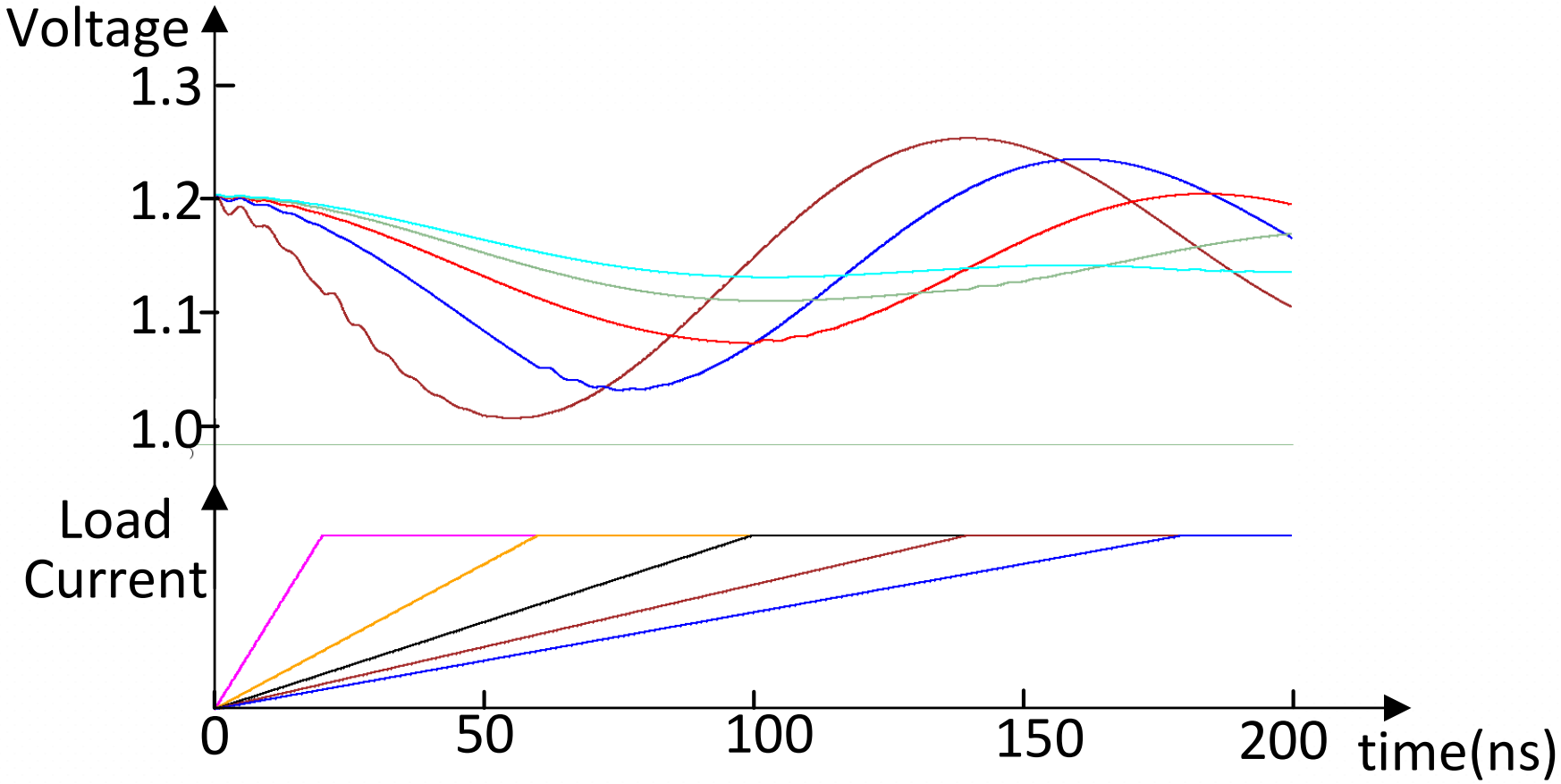

- Throttling for 2nd droop requires slow performance ramp-up (to control current ramp)
- Significant performance loss. May be ill-suited to some applications

Doing Better (Worse) than a Step

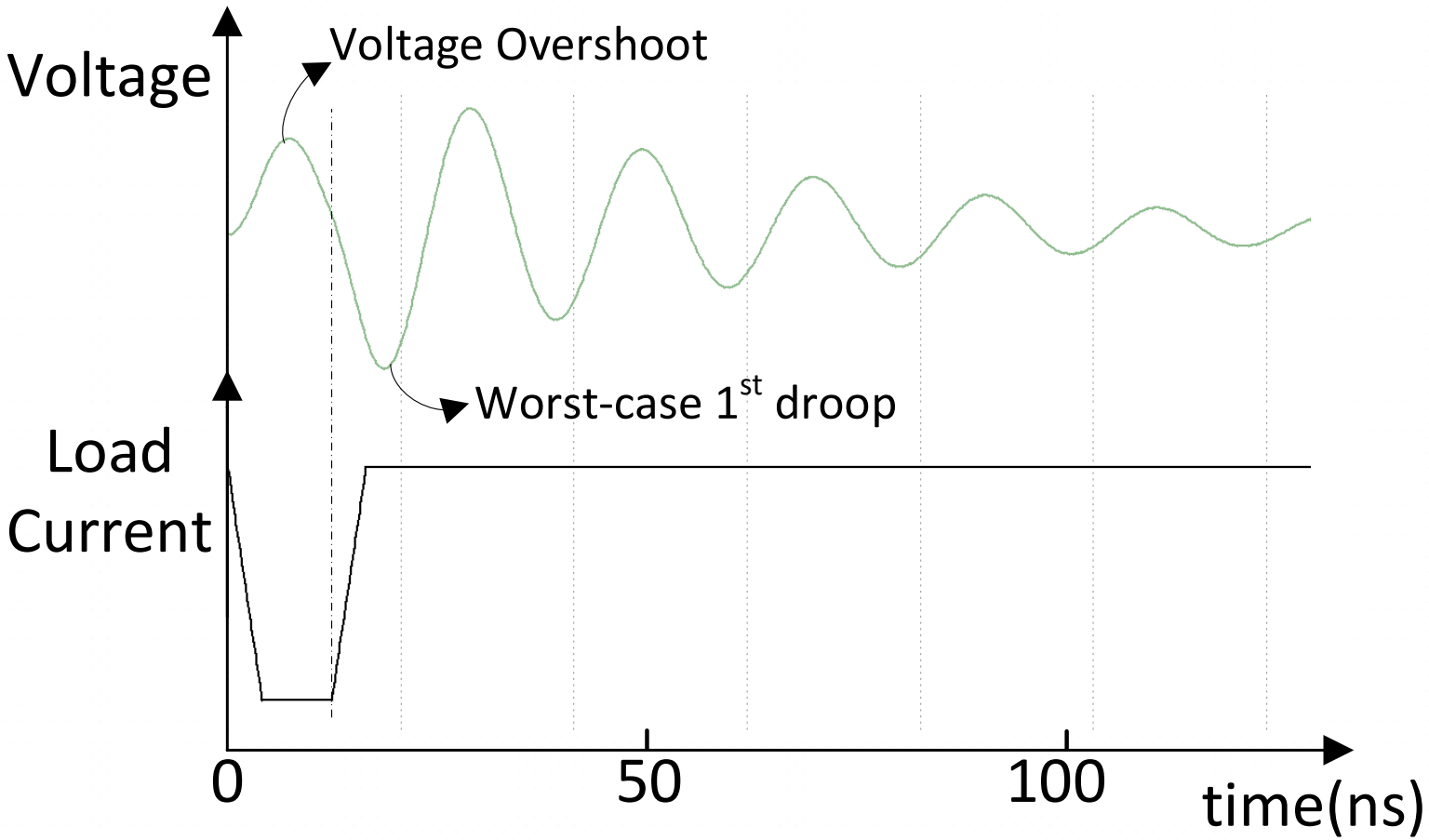

- Step load does not cause worst case droop
- Pulsed load can result in ↑ margin requirement
  - Especially if 1st droop dominates

Worst-case Supply Noise : Step vs. Pulse

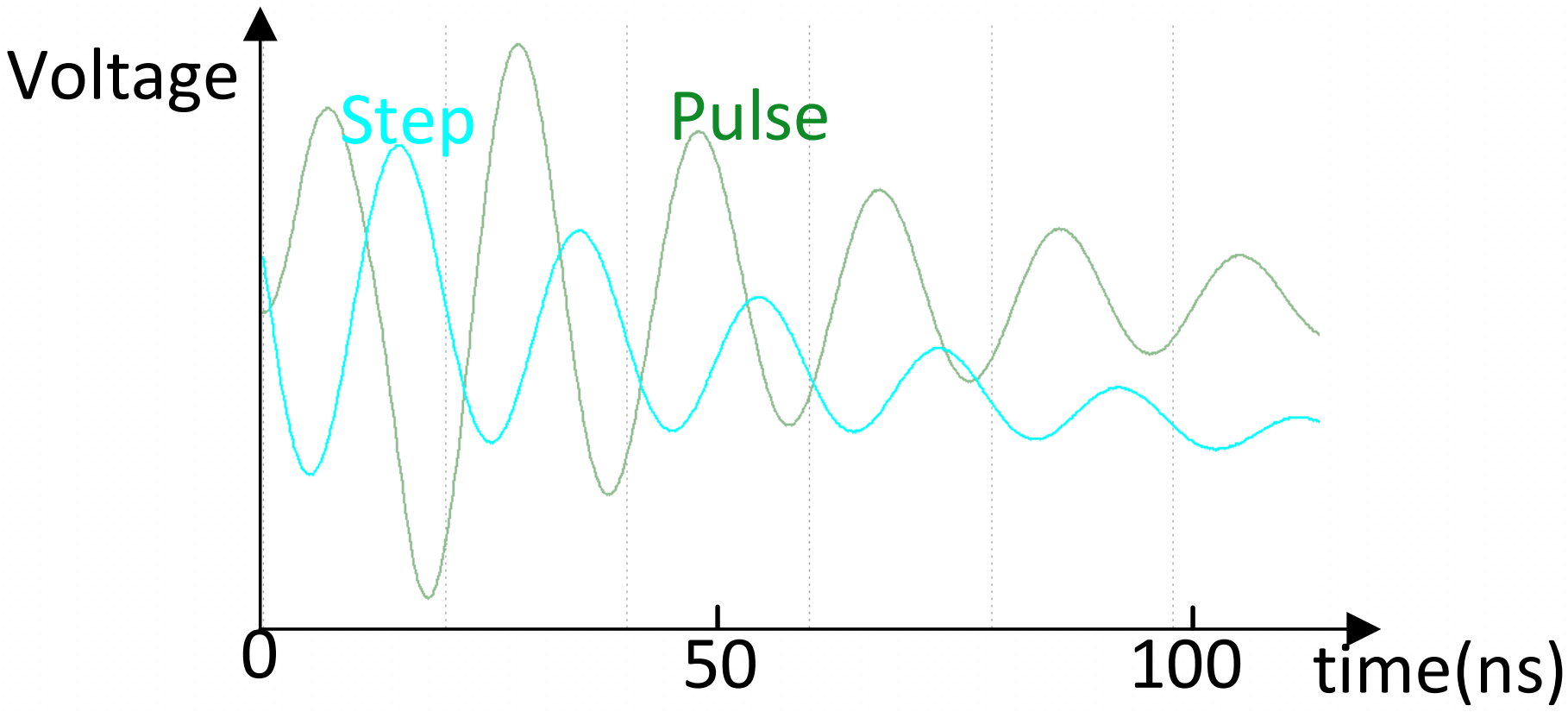

Persistent Pulsing ….

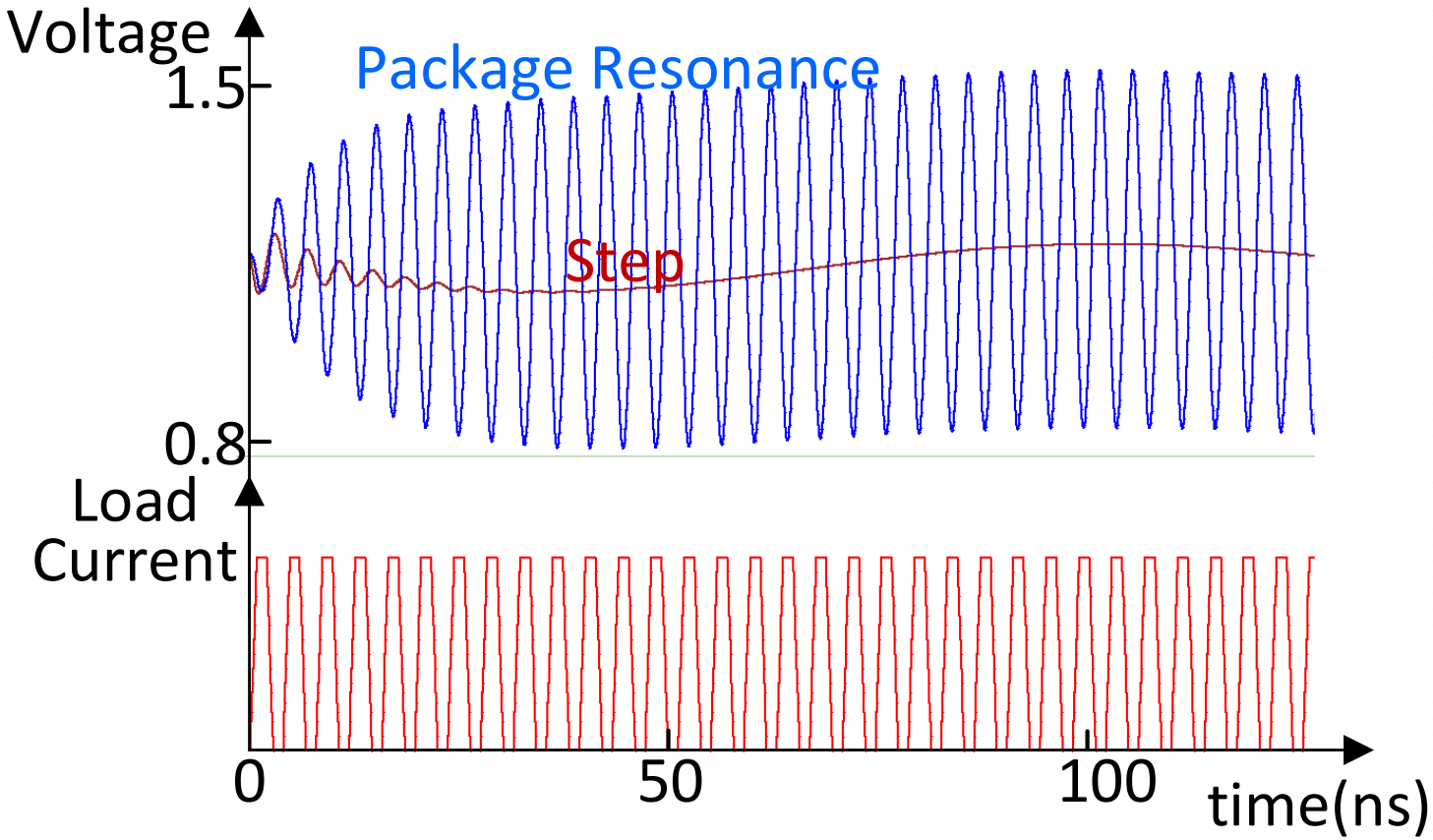

- Taking the idea further → package resonance!
  - Can be caused by loops in code
  - High reliability and robustness impact

[8] Xu et al, ISSCC 2009

Integrated Voltage Regulation (IVR)

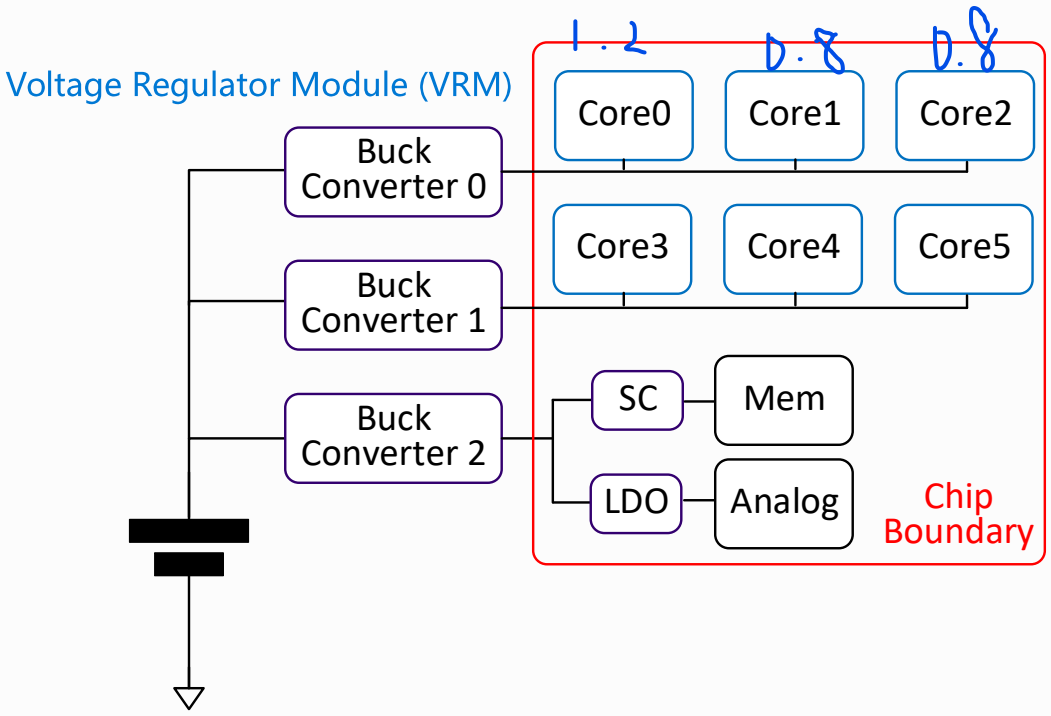

- Energy-efficiency demand → ↑ spatio-temporal V_{dd} scaling
- Off-chip regulators overwhelmingly in use today
  - Area-cost
  - PDN degradation (per-domain)
  - Slow transient response (Control far away from load)

Integrated Voltage Regulation (IVR)

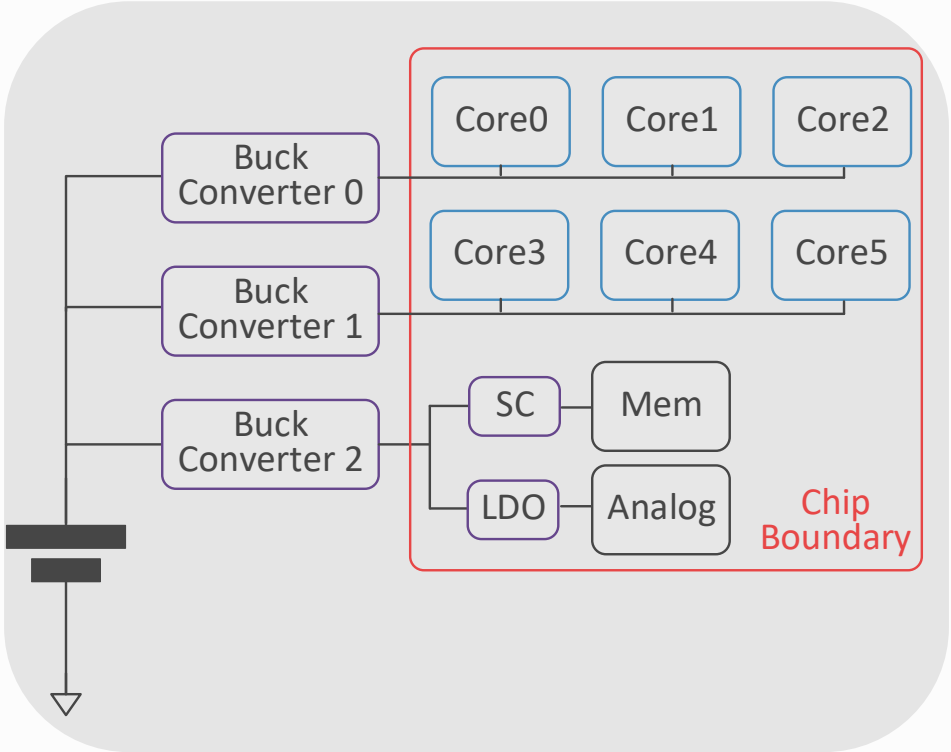

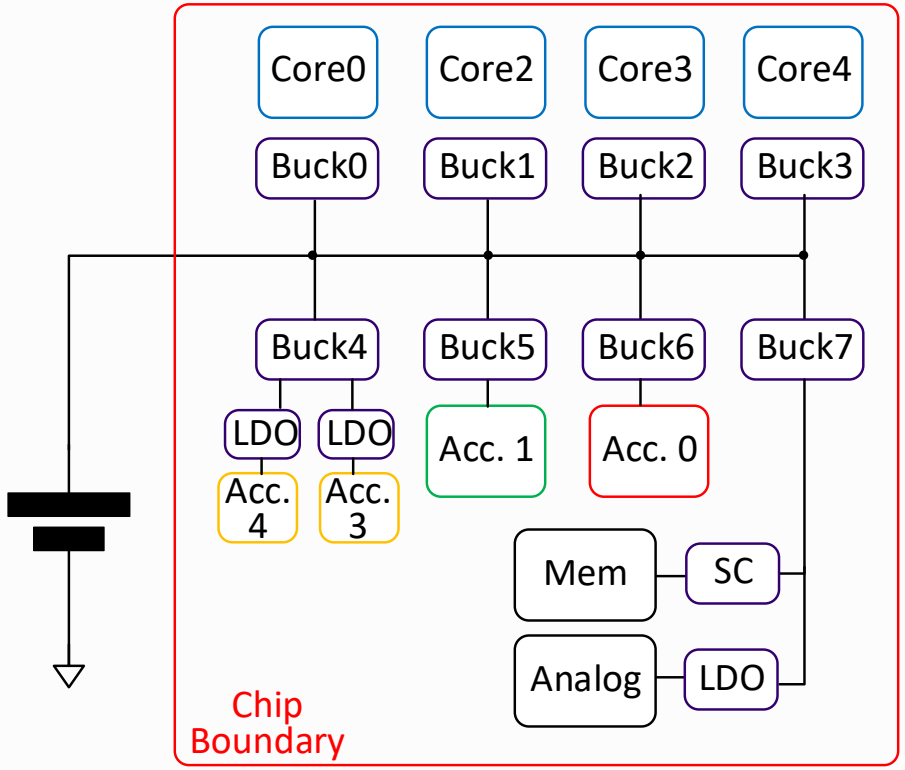

- Integrated Voltage Regulation is a key enabler
  - Buck
  - Low-Dropout Regulators (LDO)
  - Switched-Capacitor (SC)

→ Focus on advantages and trends. Elementary (cursory) introduction provided.

- Advantages in resolution, speed, pin-count, board-area

IVR – Improved Spatio-Temporal Resolution

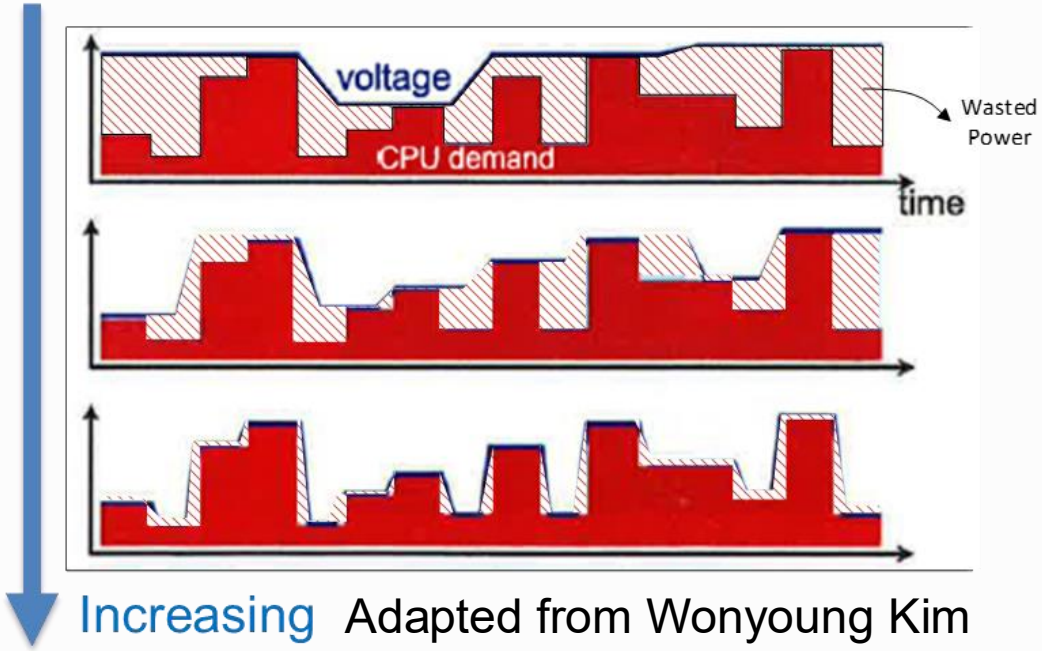

Adapted from Wonyoung Kim

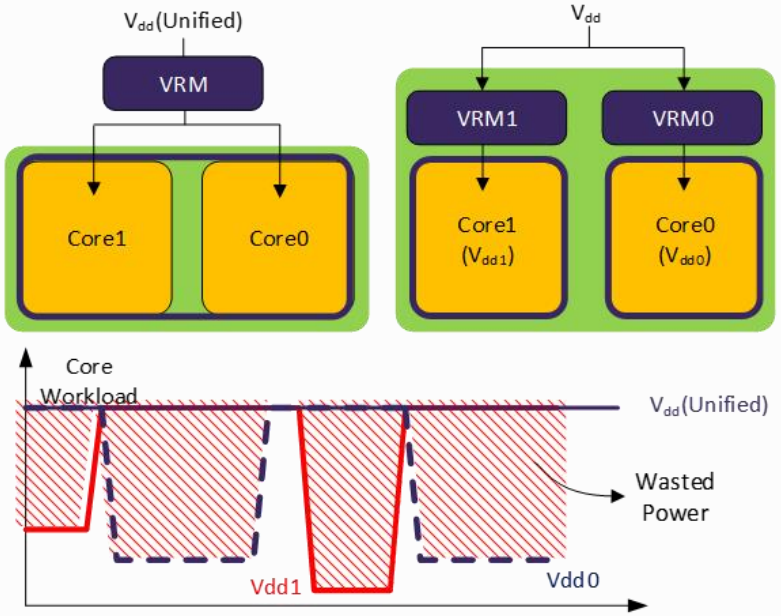

- Integrated Voltage Regulation is a key enabler
  - Buck
  - Low-Dropout Regulators (LDO)
  - Switched-Capacitor (SC)
- Advantages in speed, pin-count, board-area and resolution

Integrated Voltage Regulation (Buck)

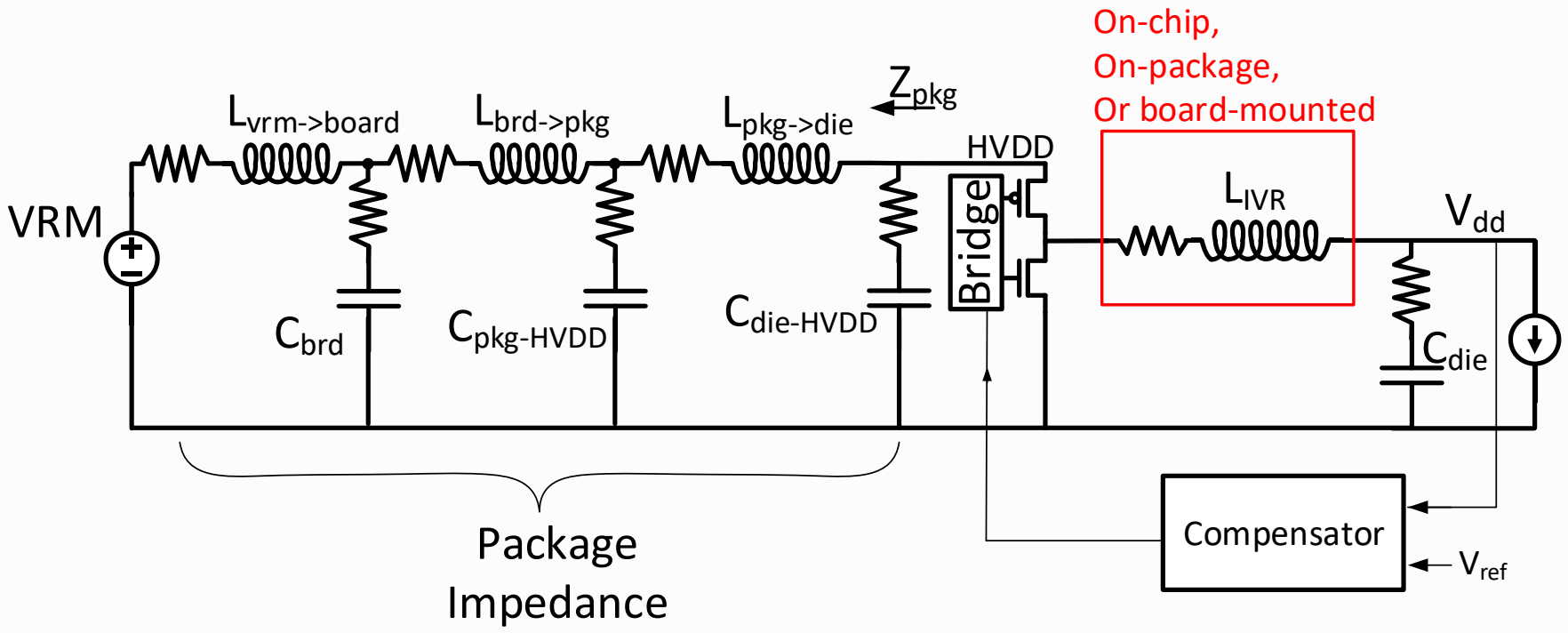

Advantages	Disadvantages/Challenges
Enhanced DVFS (spatio-temporal)	2-stage converter for Li-cell devices
Board size/cost reduction	Lower converter efficiency
Lower input current draw	Line-side supply-noise

FIVR(Intel Haswell)

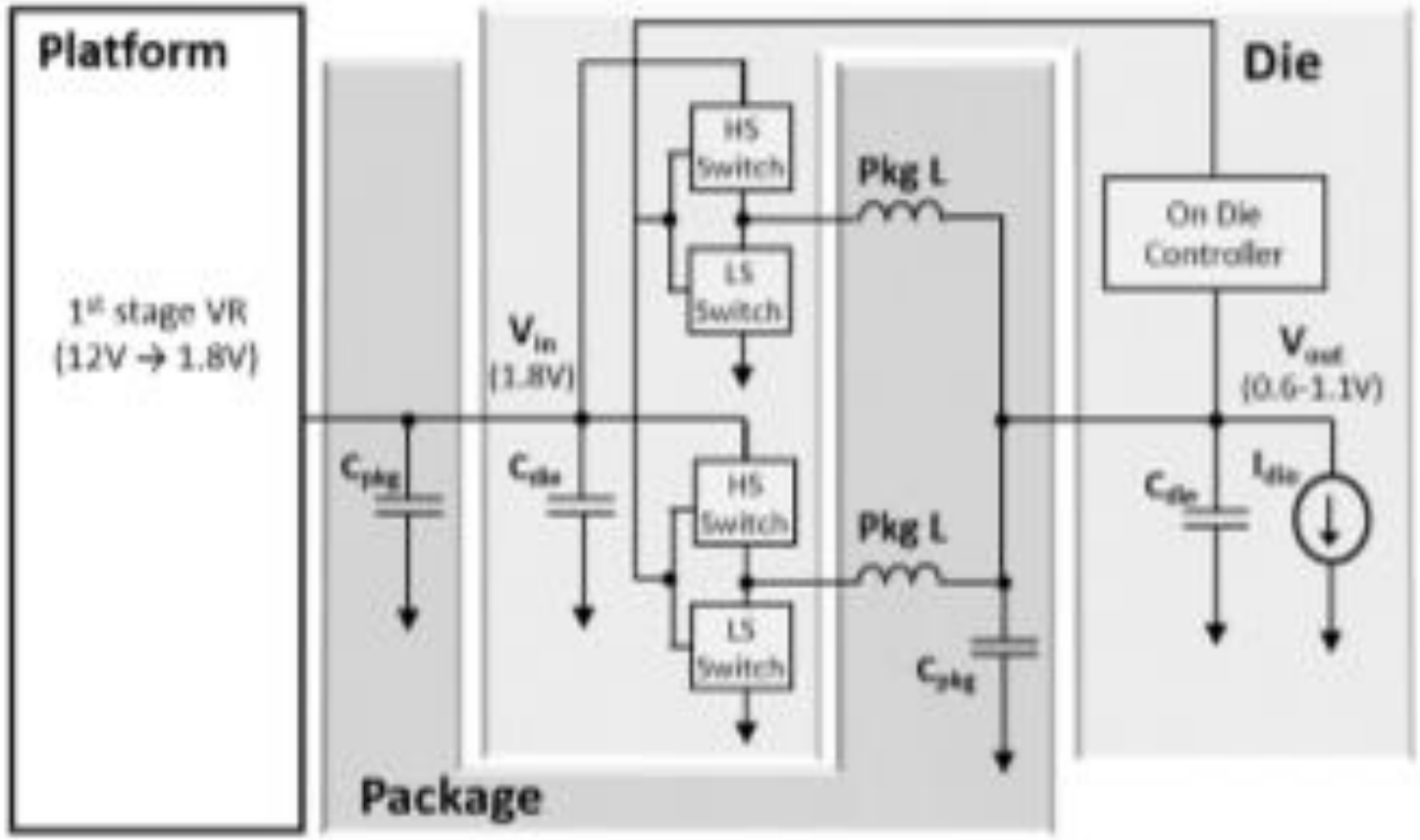

- 2-stage regulator
- Inductors built on package layer
- Decap offered by on-chip MIMCAP

[9] E. Burton, et al., APEC *2014*.

FIVR(Intel Haswell)

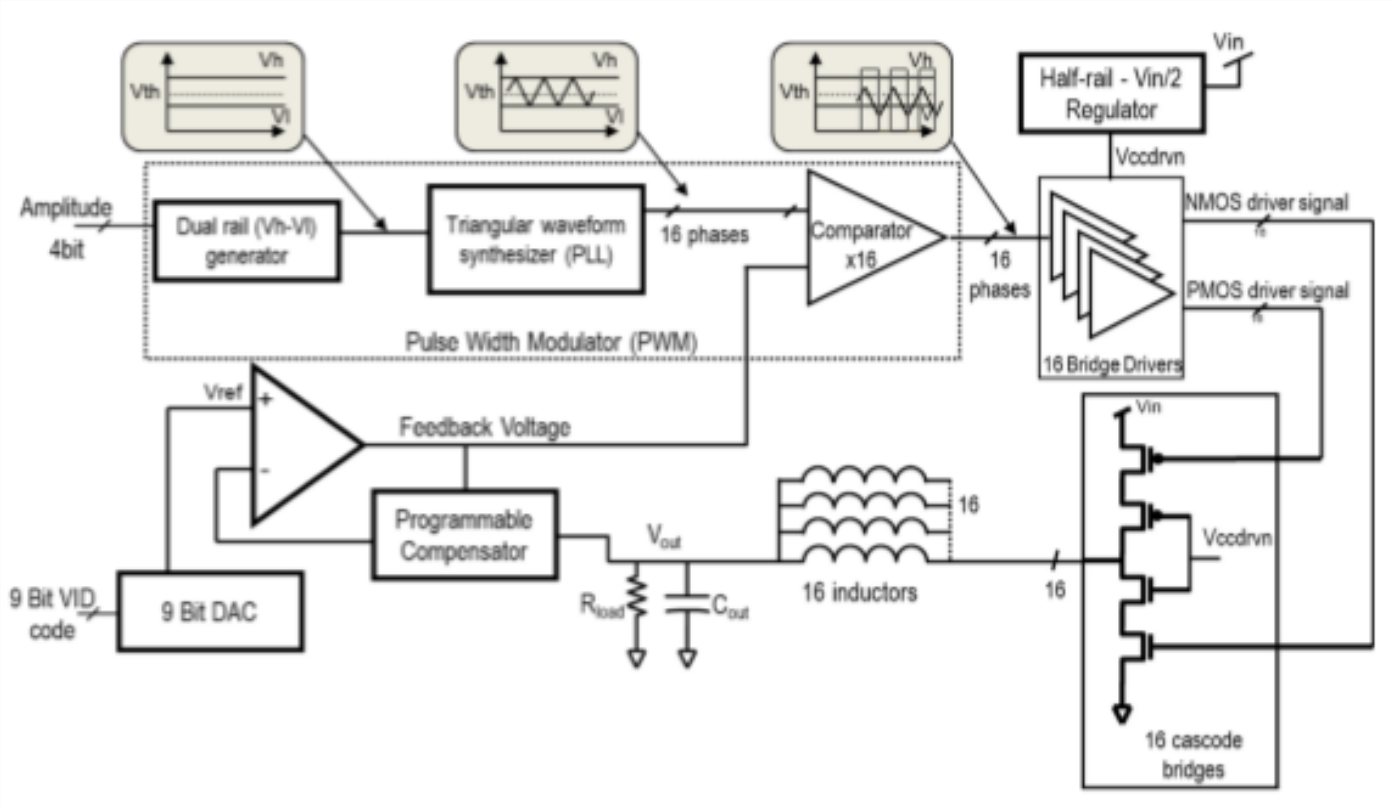

- 16-phase operation, 140MHz switching frequency
- Phase-shedding to optimize efficiency across load
- Decap offered by on-chip MIMCAP

[9] E. Burton, et al., APEC *2014*.

Inductor Integration

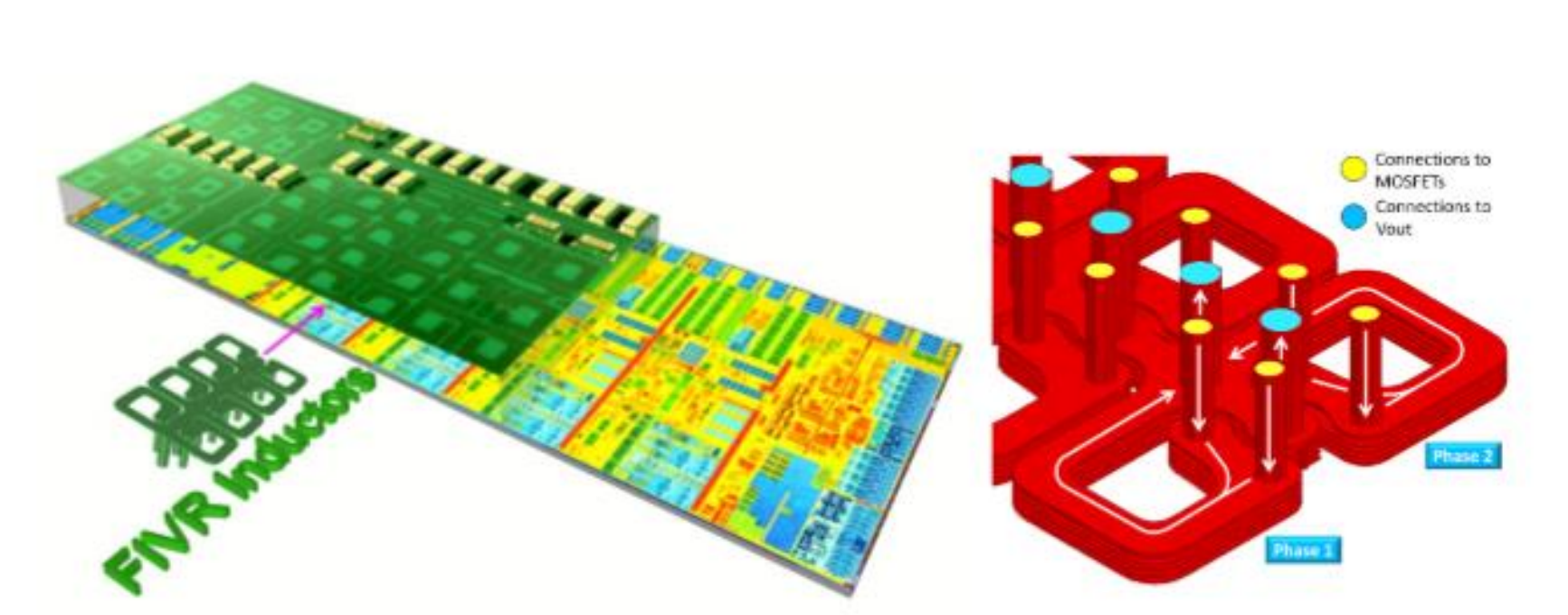

- Inductor windings distributed over individual voltage domains
  - Improved granularity
  - Relief in bump current density
  - Winding orientation to exploit mutual inductance

[9] E. Burton, et al., APEC *2014*.

Phase Shedding

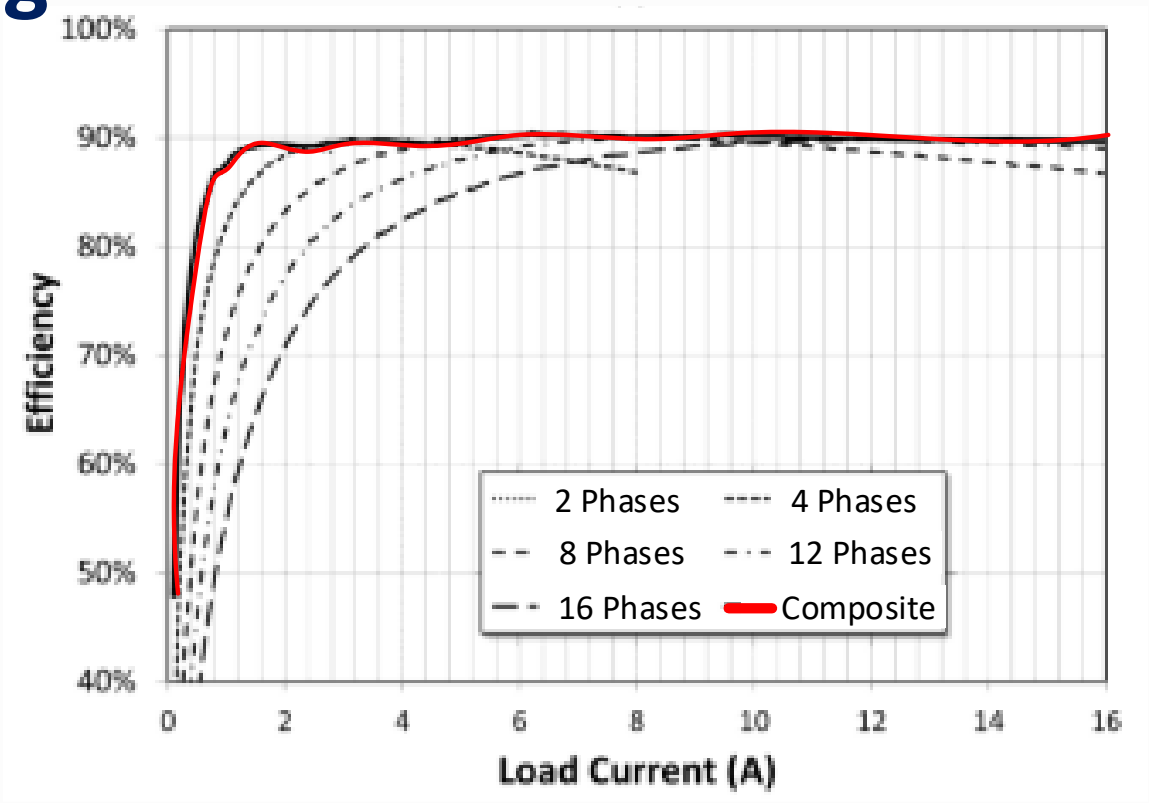

- Processors feature large dynamic current range
- Dynamic phase-shedding to achieve optimal efficiency across load-range
- Peak efficiency of ~90% @ 0.75A/phase

[9] E. Burton, et al., APEC *2014*.

Linear Regulators (Low Dropout)

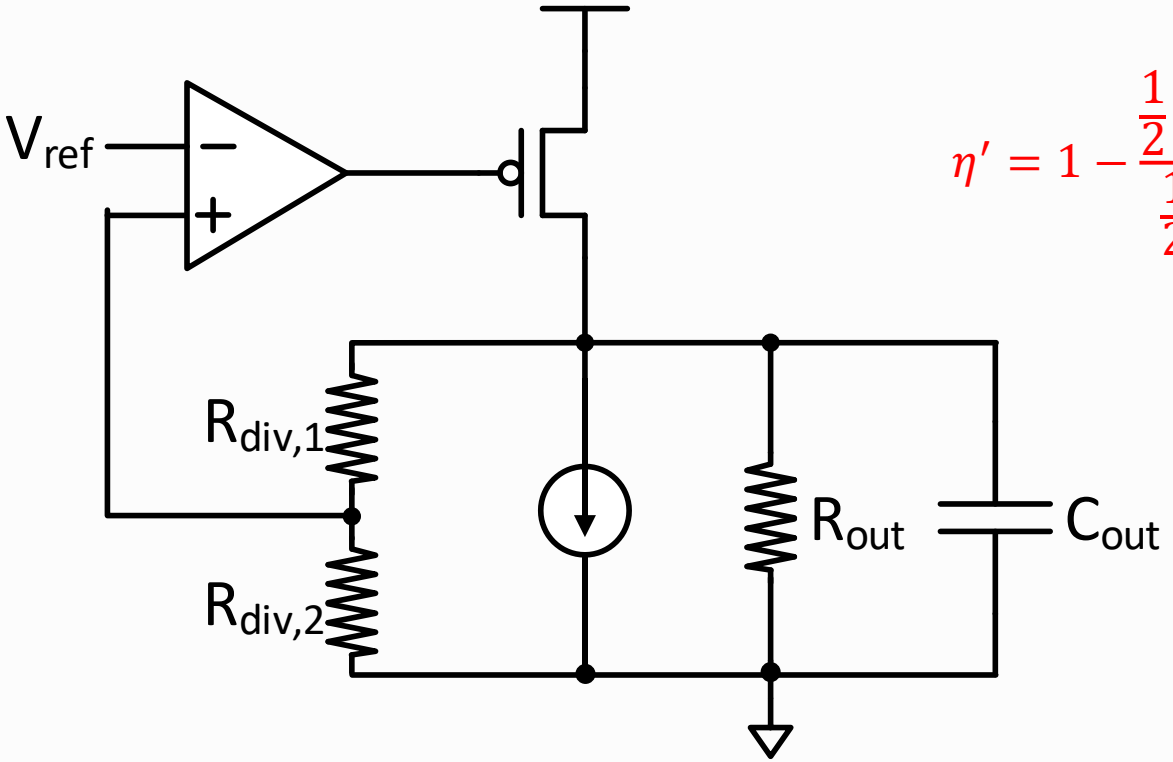

$$\eta' = 1 - \frac{\frac{1}{2}sCV_oV_{in}}{\frac{1}{2}sCV_{in}^2} = \frac{V_{in} - V_o}{V_{in}}$$

$$\eta = \frac{\frac{1}{2}sCV_o^2}{\frac{1}{2}sCV_oV_{in}} = \frac{V_o}{V_{in}}$$

- Efficiency drops linearly with output voltage*
- Typical use: Voltage control for smaller modules
  - Fast regulation
  - Low area overhead
- Low-dropout (Low voltage drop across PMOS device)

LDO Stability

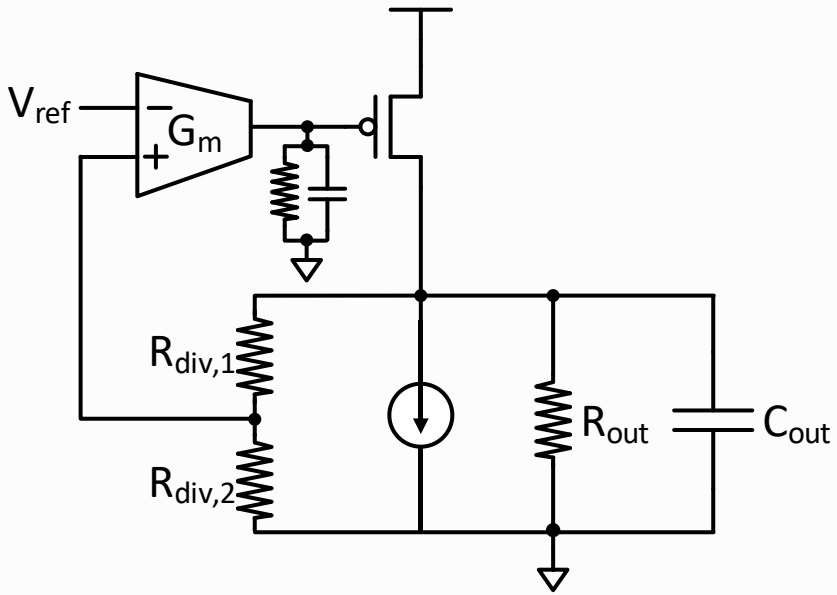

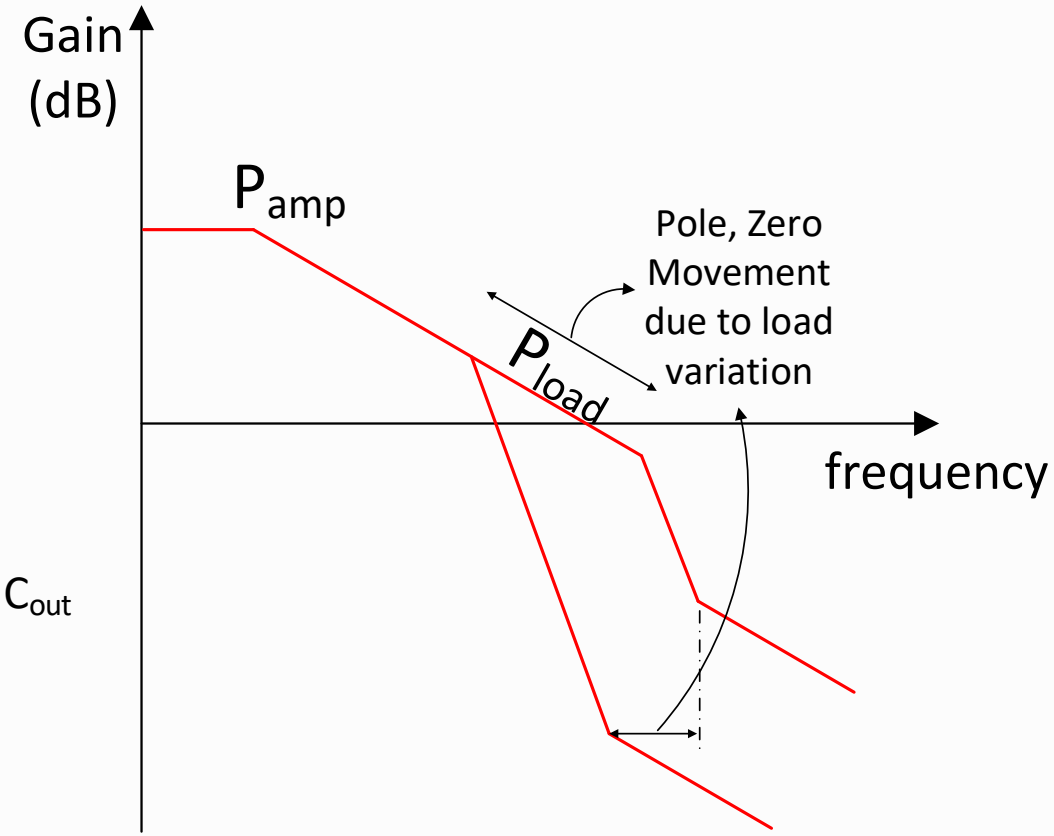

- On-chip implementations typically feature dominant error-amplifier output pole
  - Stability challenges at low current (high R_{out}) configurations
  - Require careful compensation techniques to maintain stability

Digital LDOs

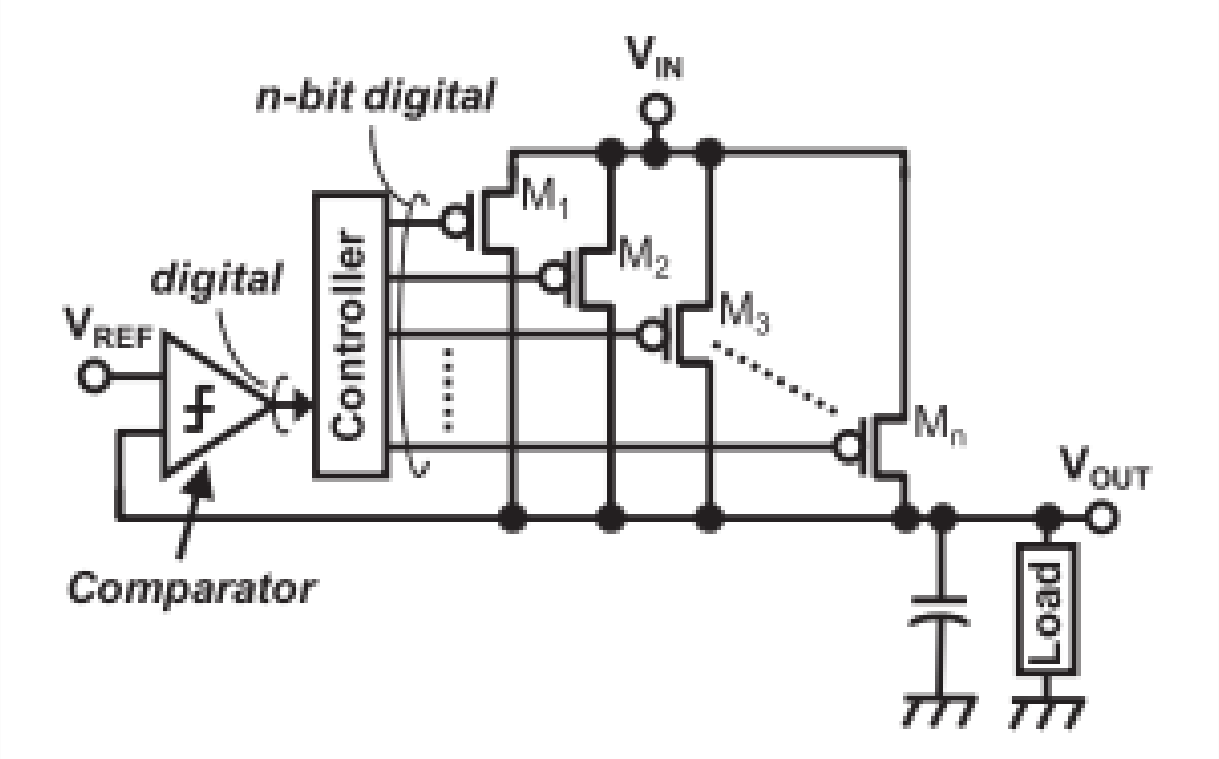

- Recently receiving a lot of attention for SoC applications
  - Consistent with largely digital workflow
  - Potentially easy to port across designs and process tech.
- Key challenge: Transient droop response and efficiency

[10] O. Yasuyuki, et al.,CICC 2010.