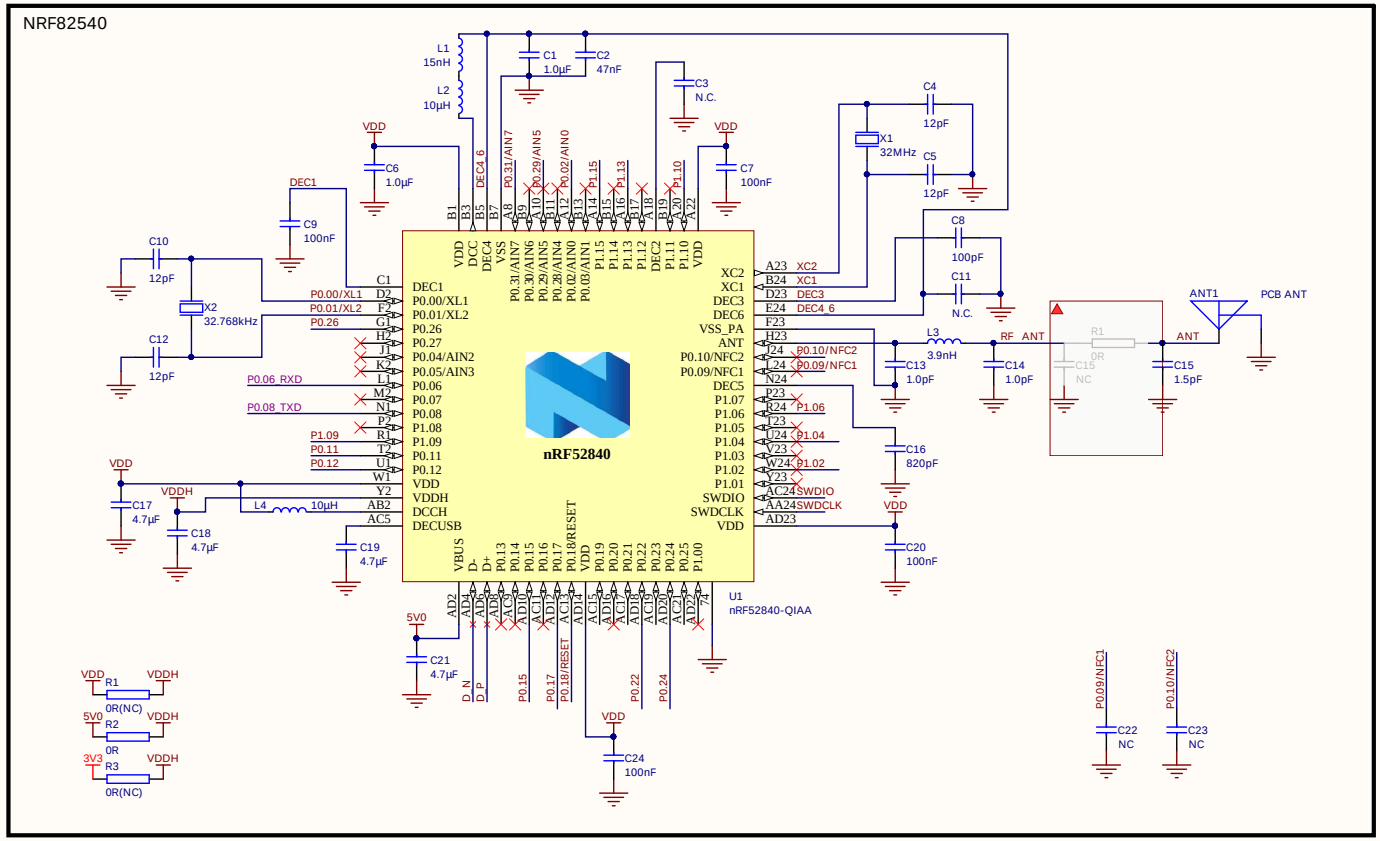
NRF82540
nRF52840
U1
nRF52840-QIAA
L1
15nH
L2
10µH
C1
1.0µF
C2
47nF
C3
N.C.
C4
12pF
C5
12pF
X1
32MHz
C6
1.0µF
C7
100nF
C8
100pF
C11
N.C.
C9
100nF
C10
12pF
C12
12pF
X2
32.768kHz
C13
1.0pF
C14
1.0pF
C15
1.5pF
C16
820pF
C17
4.7µF
C18
4.7µF
C19
4.7µF
C20
100nF
C21
4.7µF
C24
100nF
L3
3.9nH
L4
10µH
ANT1
PCB ANT
RF ANT
ANT
R1
0R
C15
NC
VDD
VDDH
DEC1
5V0
3V3
R1
0R(NC)
R2
0R
R3
0R(NC)
C22
NC
C23
NC
P0.09/NFC1
P0.10/NFC2

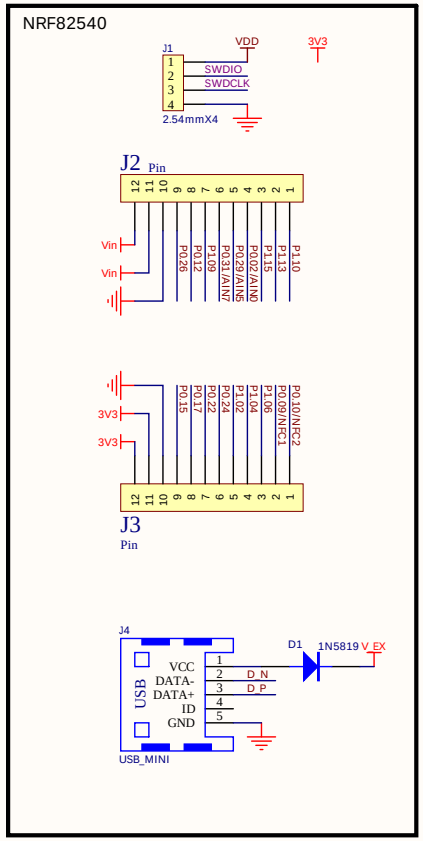
NRF82540
J1
VDD
3V3
SWDIO
SWDCLK
2.54mmX4
J2
Pin
Vin
J3
Pin
3V3
J4
USB
VCC
DATA-
DATA+
ID
GND
D_N
D_P
USB_MINI
D1
1N5819
V_EX

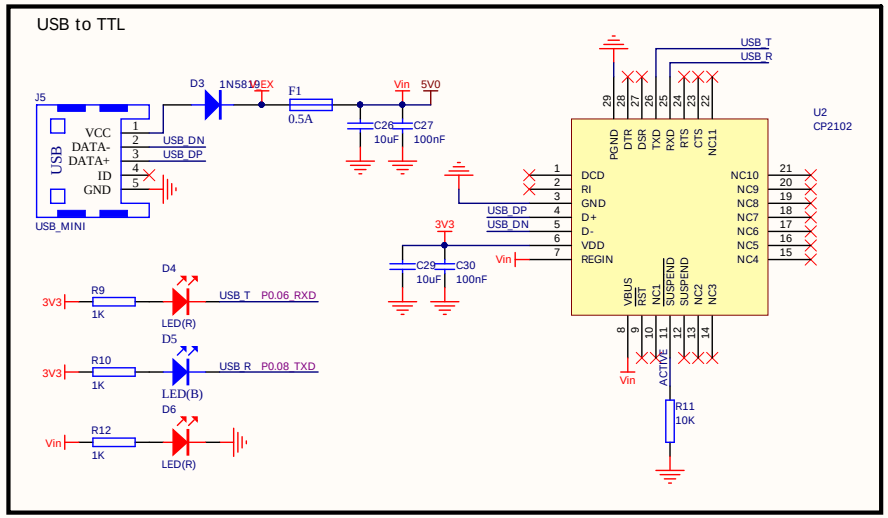
USB to TTL
J5
USB
VCC
DATA-
DATA+
ID
GND
USB_DN
USB_DP
USB_MINI
D3
1N5819
V_EX
F1
0.5A
Vin
5V0
C26
10uF
C27
100nF
U2
CP2102
DCD
RI
GND
D+
D-
VDD
REGIN
NC10
NC9
NC8
NC7
NC6
NC5
NC4
USB_T
USB_R
3V3
C29
10uF
C30
100nF
D4
R9
1K
LED(R)
USB_T
P0.06_RXD
D5
R10
1K
LED(B)
USB_R
P0.08_TXD
D6
R12
1K
LED(R)
R11
10K
ACTIVE

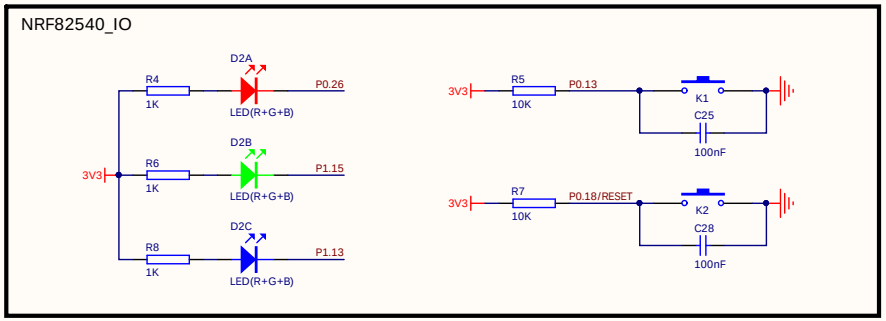
NRF82540_IO
D2A
R4
1K
LED(R+G+B)
P0.26
D2B
R6
1K
LED(R+G+B)
P1.15
D2C
R8
1K
LED(R+G+B)
P1.13
3V3
R5
10K
P0.13
K1
C25
100nF
R7
10K
P0.18/RESET
K2
C28
100nF

Logo1
4032