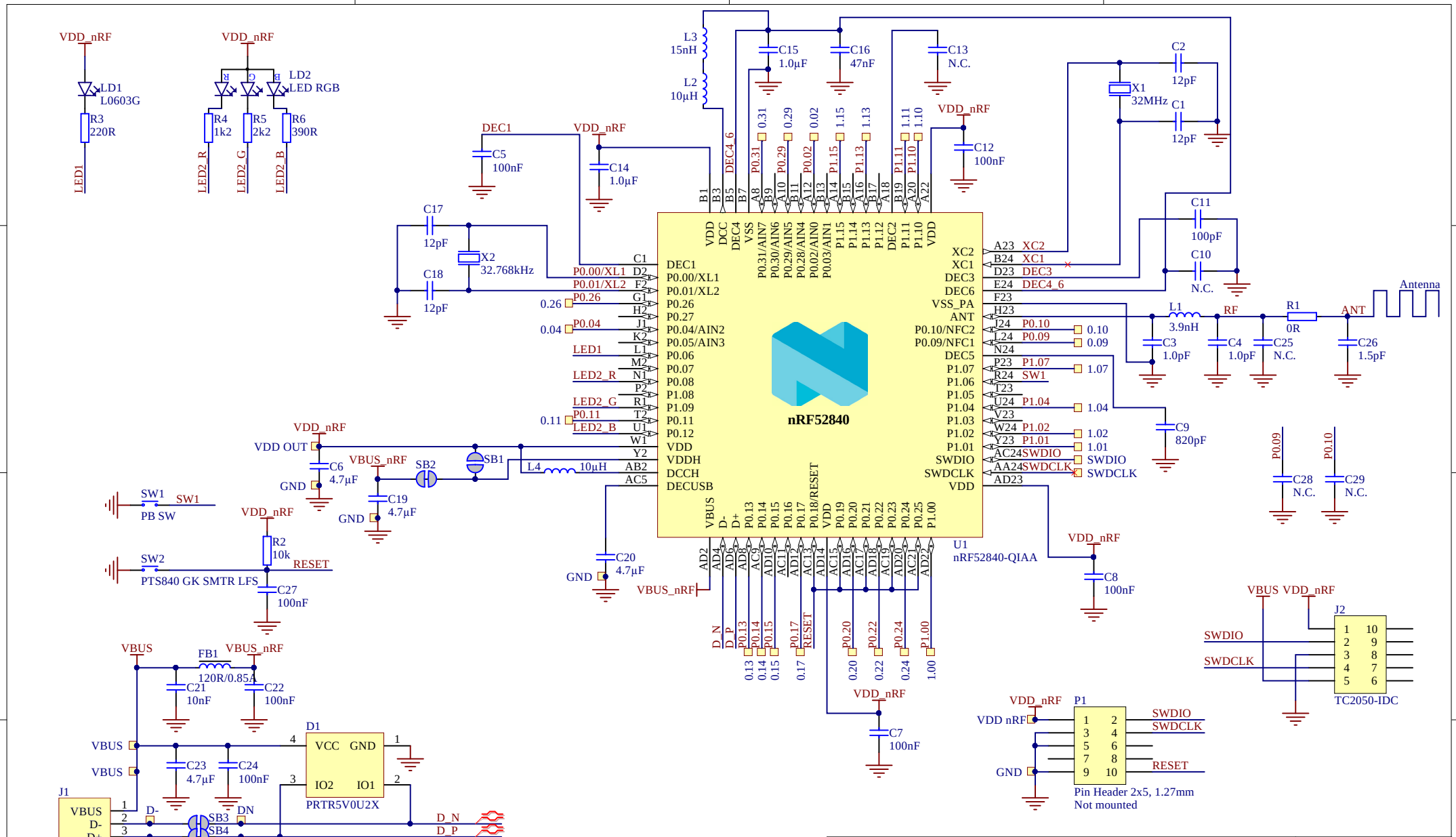
nRF52840
U1
nRF52840-QIAA
VDD_nRF
LD1
L0603G
R3
220R
LED1
LD2
LED RGB
R4
1k2
R5
2k2
R6
390R
LED2_R
LED2_G
LED2_B
L3
15nH
L2
10µH
C15
1.0µF
C16
47nF
C13
N.C.
C12
100nF
C5
100nF
C14
1.0µF
DEC1
C17
12pF
C18
12pF
X2
32.768kHz
X1
32MHz
C2
12pF
C1
12pF
C11
100pF
C10
N.C.
L1
3.9nH
R1
0R
Antenna
ANT
RF
C3
1.0pF
C4
1.0pF
C25
N.C.
C26
1.5pF
C9
820pF
C28
N.C.
C29
N.C.
P0.09
P0.10
VDD OUT
C6
4.7µF
GND
VBUS_nRF
SB2
SB1
L4
10µH
C19
4.7µF
SW1
PB SW
SW2
PTS840 GK SMTR LFS
R2
10k
RESET
C27
100nF
C20
4.7µF
C8
100nF
C7
100nF
VBUS
FB1
120R/0.85A
C21
10nF
C22
100nF
C23
4.7µF
C24
100nF
D1
VCC
GND
IO2
IO1
PRTR5V0U2X
J1
VBUS
D-
D+
GND
USB-A
SB3
SB4
DN
DP
D_N
D_P
FB2
120R/0.85A
UGND
J2
TC2050-IDC
SWDIO
SWDCLK
P1
Pin Header 2x5, 1.27mm
Not mounted
Title
nRF52840 USB Dongle
Size
A4
Project Number
4440
Revision
1.0.0
Date: 2018/6/18
File: pca10059.SchDoc
Sheet 1 of 1
Drawn By: RUBR
NORDIC
SEMICONDUCTOR