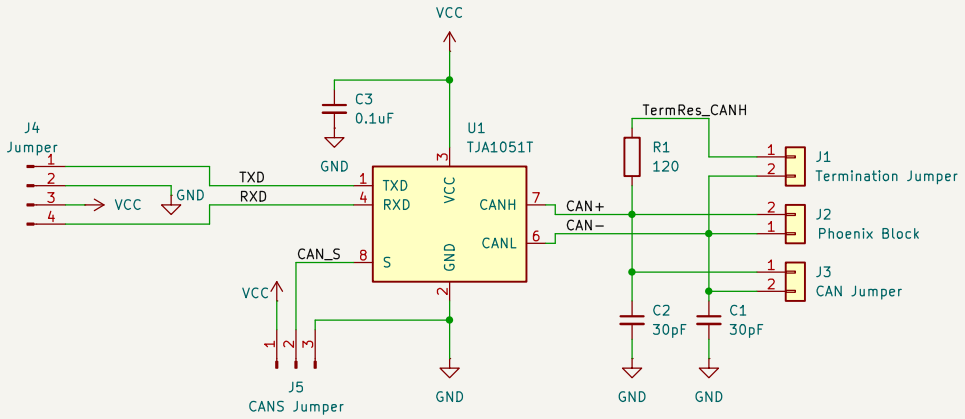

Sheet: /
File: tja1050_breakout.kicad_sch

Title: TJA1051 Breakout Board

Size: A5	Date: 2025-09-28	Rev:
KiCad E.D.A. 9.0.1		Id: 1/1