ENGN3227
ANALOGUE ELECTRONICS

Heart Rate Monitor

Ken Li CHONG u2554259
David HOLDEN u2544548
Tim OLIN u2560340

1 Abstract

The aim of this project is to implement an ECG and Digital Heart Rate counter. The main challenges include amplifying the desired weak signal in the presence of noise from other muscles and electrical sources. A display of the heart rate will be obtained by measuring the time between signal peaks and then calculating the frequency of the peaks in units of beats per minute.

The device is most useful if it is portable. This requires a battery to be able to power all of the necessary components as well as the power output of the battery to be regulated.

Our implementation of the heart monitor involves low cost amplifier and filter components coupled with a sophisticated microcontroller and LCD screen.

Results were successful for the amplifier filter stage of the implementation with an ECG successfully detected and recorded but variability of the voltage points complicated the calculation and display of the actual rate.

2 Introduction/Background

The heart is one of the most vital organs within the human body. It acts as a pump that circulates oxygen and nutrient carrying blood around the body in order to keep it functioning. The circulated blood also removes waste products generated from the body to the kidneys. When the body is exerted the rate at which the heart beats will vary proportional to the amount of effort being exerted. By detecting the voltage created by the beating of the heart, its rate can be easily observed and used for a number of health purposes

An electrocardiogram (ECG) is a graphical trace of the voltage produced by the heart. A sample trace of a typical ECG output for a single beat is shown below. There are 5 identifiable features in an ECG trace which corresponds to different polarisation stages that makes up a heart beat. These deflections are denoted by the letters P, Q, R, S and T.

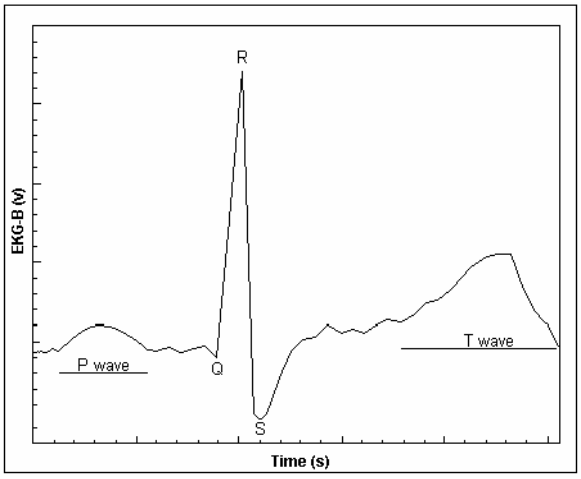

Figure 1 - ECG Plot

By detecting the R peaks and measuring the time between them the heart rate can be calculated and then displayed. A persons heart rate before, during and after exercise is the main indicator of their fitness. Measuring this manually requires a person to stop the activity they are doing in order to count the number of heart beats over a period of time. Measuring the heart rate using an electrical circuit can be done much quicker and more accurately.

3 Theory/Design

We will be implementing an ECG and Digital Heart Rate counter. The main challenge of the project would be to amplify the desired weak signal in the presence of noise from other muscles and electrical sources. A display of the heart rate will be obtained by measuring the time between signal peaks and then calculating the frequency of the peaks in units of beats per minute.

The device is most useful if it is portable. This requires a battery to be able to power all of the necessary components as well as the power output of the battery to be regulated.

3.1 Desired signal

The heart pulse received on the skin by electrodes is a result of traveling electrical activity from the heart. At the skin, this signal has a relative potential in the range of about ~2mV. This pulse as depicted in Figure 1 has a pulse length of about 20ms and therefore has a very low bandwidth of 50Hz.

3.2 Noise

Noise from the environment will easily swamp the tiny pulse signal from the heart. The leads connecting the electrode to the amplifier will act like an antenna which will inadvertently receive unwanted radiated signals. Such signals are for example the 50Hz from power lines and emf's from fluorescent lights will add a tiny sinusoidal wave which is generally quite difficult to filter away.
Muscles other than the heart also produce voltage potentials and these can also be detected although the large relative size and regularity of the heart muscles help to differentiate it from the rest.

3.3 Enhancements

To address the issues above, the following measure will be taken:

- A high gain amplifier with a high Common Mode Rejection Ratio (CMRR) will be used to receive the desired signal. Also having a frequency response of at least 50Hz to detect the heart pulse.
- A low pass filter will be implemented to remove the noise. Because most of the noise types discussed are of high frequency while the desired signal is relatively low a single pole filter will suffice.
- The final circuit will be implemented in a Printed Circuit Board (PCB) to reduce the number of "radiating and transmitting" sources on the device (loose wires and exposed long component legs).
- Necessarily long wires for the contacts will be shielded.

An initial design was constructed using a modular based approach for ease of testing and construction.

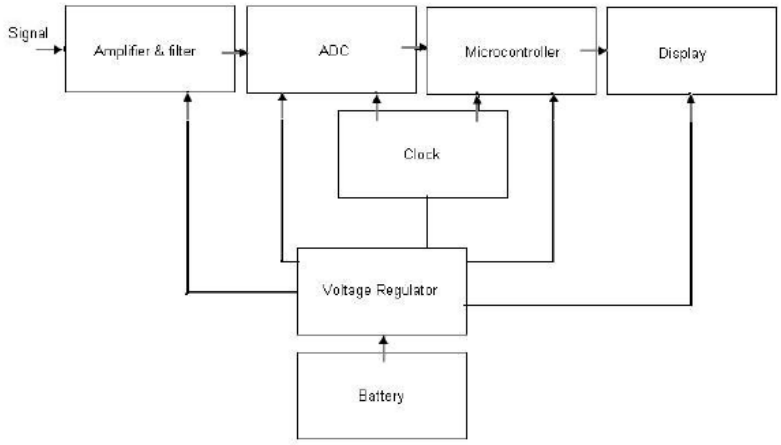

Figure 2 - Heart Rate Monitor System Diagram

3.4 Amplification Stage

An instrumentation amplifier is usually the very first stage in an instrumentation system. This is because of the very small voltages usually received from the probes need to be amplified significantly to be proceeding stages. An instrumentation amplifier (IA) is a difference amplifier where the difference between the two input terminals is amplified and the common signals between the inputs are rejected (Common Mode Rejection (CMR)). The latter function is the device characteristic, termed the Common Rejection Ratio (CMRR). As depicted in Figure 3, it typically consists of three op-amps.

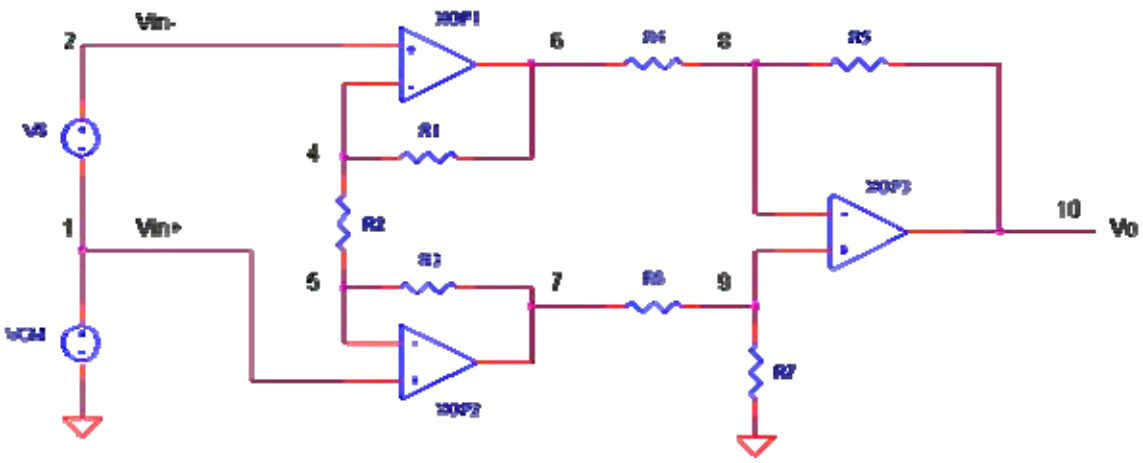

Figure 3- Typical IA Three Op-Amp design

The IA circuit can be decomposed into two parts. Referring to Figure 3, XOP1 and XOP 2 are in a buffered amplifier configurations and XOP 3 is a basic differential amplifier. The buffered amplifiers while providing first stage amplification to the inputs also isolates the resistor resistance from being affected by the biasing (high potential or at noise floor) at the input terminals. The differential amplifier XOP 3 compensates for the bias by only considering the difference between the input terminals and generally has a differential gain of 1. For a bio-signals amplifier once of the important characteristics of the Op-amps to be used are its CMRR and Gain.

CMRR is generally affected by the matching of the resistance values throughout the circuit. Therefore the use of resistors with accuracies of 0.1% is highly desirable.

The overall gain of the IA circuit is given by Equation 1 below.

$$\frac{V_0}{V_S} = \left(1 + 2\frac{R_1}{R_2}\right)\frac{R_5}{R_4} \qquad \textbf{Equation 1}$$

3.5 Processing & Display

An 8-bit microcontroller was chosen to process the output signal produced by the amplification stage. The Microchip PIC16F877A was selected due to its additional output and processing power, and also its onboard 10-bit analogue to digital converter and in-circuit debugging features. Using this highly integrated microcontroller allowed for a simpler design and trouble shooting debugging process.

Due to the use of a microcontroller to calculate the beats per minute (BPM), it was decided that a liquid crystal display (LCD) module would be the most flexible way of displaying this numerical output. It was originally planned that several seven segment displays could be used, but again it was deemed worthwhile to integrate the display unit together and limit the number of components required. In addition, the information which the LCD could convey was greater.

Below is a block diagram of the microcontroller and LCD process:

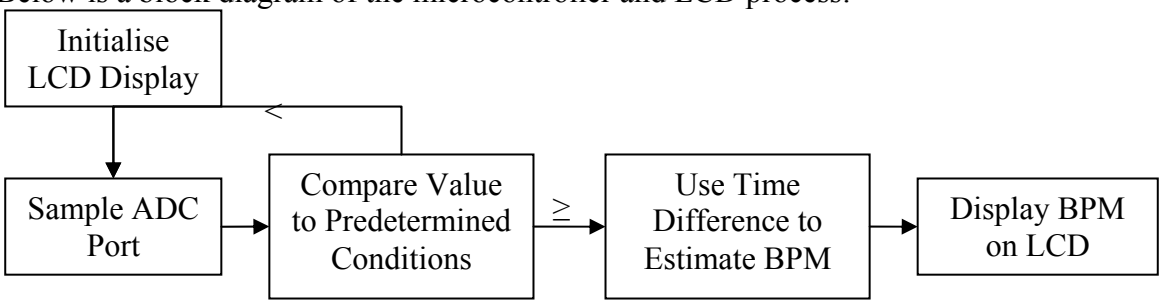

Regarding the actual BPM calculation (assuming that it was possible to translate each R part (the blip/spike peak) into singular events occurring in a timely fashion of course) it was originally going to be done by measuring the total number of spikes within a certain amount of time and then multiplying this count by a factor (as it is done when using a clock and your hand). With the use of the microcontroller however more precise measurements were able to be made resulting in an output of greater accuracy and speed.

3.6 Power

To power the circuit, the system will be divided into two sections. The system will be powered via a 9V battery with the required the 5V in section two obtained via a LM7805 5V voltage regulator. The sections are designed such that both sections can be powered via a single 9V battery or through two 9V dedicated battery for each section.

For the amplifier stage, the op-amps require dual polarity rails to operate. To generate a negative voltage from a single 9V battery a virtual ground has to be created.

Referring to Figure 4, the resistors in the op-amp forms a voltage divider so that half the applied voltage V_{CC} forms at the output However, it is important to note that a virtual ground has only limited output current therefore the op-amp should be used in the inverting configuration. This is because in this it requires no ground current.

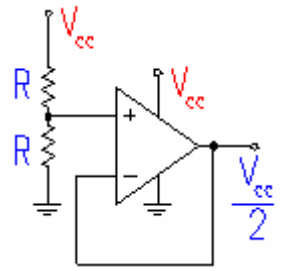

Figure 4 - Generating a virtual ground

4 Implementation

4.1 Amplification Stage

To test the gain of the amplification circuit, a sinusoidal signal was attenuated to around the expected value to be amplified. The attenuation was achieved via the function generator and even further through a voltage divider circuit.

4.2 Display and Processing

The following two images are port names taken from the datasheets of the microcontroller and LCD used. The table details the corresponding pin connections between these two elements. The order in which these were connected was chosen to preserve the bit order of the microprocessor.

Pin #	Description	Connection
1	Vss	Ground
2	Vcc	5v
3	Vee	Center of 10k pot
4	RS	RE0 PIC
5	R/W	RE2 PIC
6	E	RE1 PIC
7	DB0	RD0 PIC
8	DB1	RD1 PIC
9	DB2	RD2 PIC
10	DB3	RD3 PIC
11	DB4	RD4 PIC
12	DB5	RD5 PIC
13	DB6	RD6 PIC
14	DB7	RD7 PIC

Table 8: Pin Connections for LCD

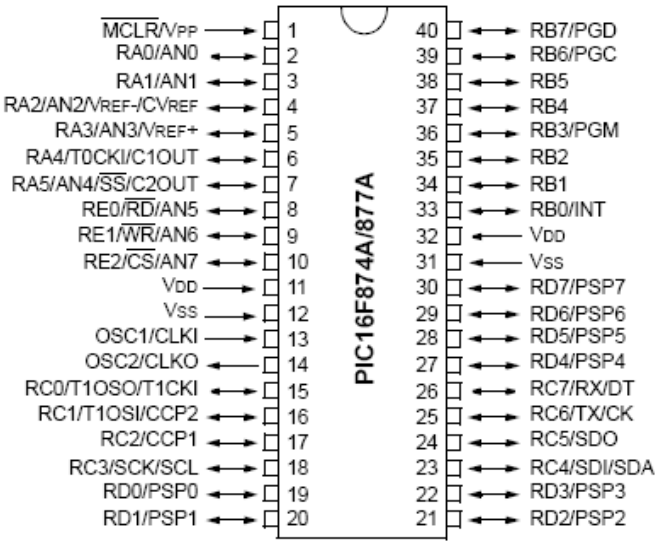

LCD PIN #	Microcontroller pin
1	
2	
3	
4	8
5	10
6	9
7	19
8	20
9	21
10	22
11	27
12	28
13	29
14	30

Pin 3 on the LCD is a contrast adjustment and will require a potentiometer attachment Note that a 5V is required to power both the LCD and microcontroller, so a voltage regulator was added before the node where the tracks split off to power, the LCD pin 2 and the microcontroller pin 11 (V_{dd}) and pin 32 (V_{dd}).

It was realized part way through the implementation stage that the output signal waveform from the amplification stage had a voltage bias that was highly dependant on the skin resistance and signal strength. As a direct result of this, complete implementation of the display unit became a real challenge as this relied on finding a variable voltage point.

The expected output of the LCD is "`HEART RATE: XXX`" with XXX being a number between 0 and 999, which will be the users BPM. This will update frequently as new calculations are made. A complete photographic view of the system can be seen in the appendix section.

4.3 Data Acquisition

In order to acquire the ECG signal care was required not to overwhelm it with noise during the initial stages. This was achieved by both maximizing the signal strength before the amplifier stages as well as minimizing the added noise. As previously mentioned the long lengths of cable required to reach the person having their heart rate measured are quite long and are easily susceptible to added noise. This is minimized by using shielded core audio cable to carry this signal.

The amount of the signal detected is maximized by using electrodes with a larger surface area. This is further increased by lowering the resistance of the junction between the skin and the electrode by using a conductive lubricant such as hand lotion or shampoo.

4.4 PCB Implementation

Using the Eagle PCB software provided the schematic of the amplifier and filter stages was replicated from the original PSpice implementation. This was then

converted into a PCB layout. A separate schematic and layout was also created to simplify connections to the microcontroller.

As a precaution all integrated circuits (IC) were not directly soldered to the PCB. Taking their spot was IC socket holders. This was to allow for the possibility to change between Op-amp types (Precision or General) and to allow for allowance for ease of replacement of damaged ICs as well as to prevent damage from poor soldering. The PCB implementation can be found in Appendix A

5 Results

Figure 5 below illustrates the gain, CMR and filter ability of the amplifier. A gain of about 200 was achieved in this instance. In addition to this, the CMR and filter resulted in a clean sinusoid with amplitude of 6.19V. By varying the input frequency the frequency response of this stage was obtained as shown in Figure 6. The cut off frequency was located at 10 kHz with a drop of -20 dB/decade. This was ample for the purpose of detecting the heart pulse.

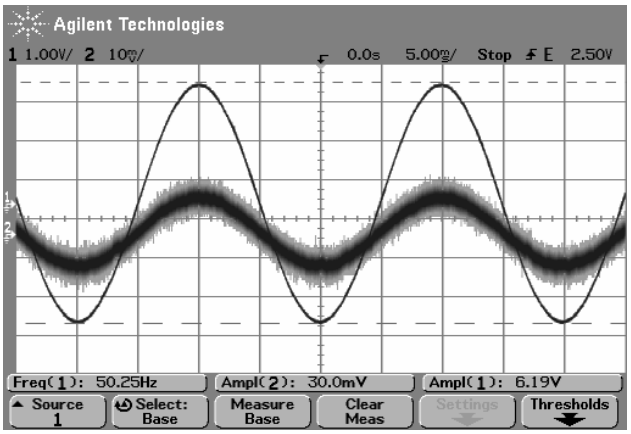

Figure 5 - Test waveform (thick) and Amplified waveform (thin)

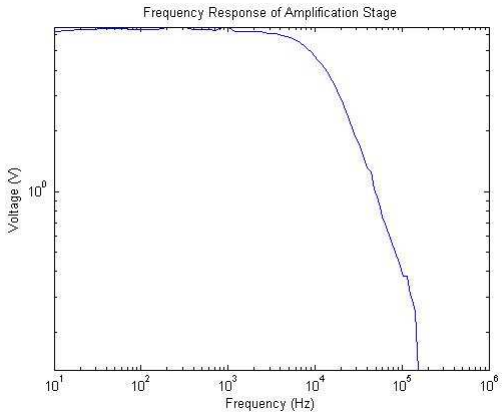

Figure 6 - Frequency Response of Amplification Stage

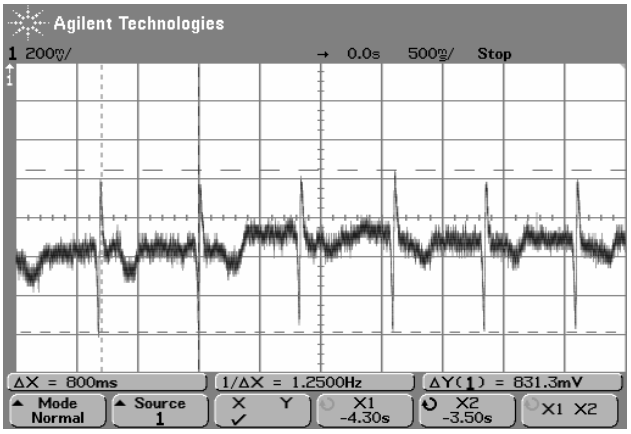

Figure 7 - Actual Trace of Amplified ECG Received

The above waveform is the ECG waveform collected from a 'patient'. The capture from the CRO shows the frequency and amplitude of the ECG signal. It had a frequency of 1.25 Hz, which corresponds to 80 BPM. The gain was adjusted via the two potentiometers to obtain a suitable trace.

6 Discussion

It was observed that the PCB implementation produced a cleaner output signal than that of the breadboard implementation. Comparing Figure 10 and Figure 12, the connections of the former are achieved through wires. In any circuit output which is sensitive to noise, the length of wires will contribute to noise receiving signals like an antenna.

In using the electrodes to receive signals from the body, it was observed that the quality of the ECG signal was strongly related to that of the amount of conductive lubricant. This is expected as the resistance of the skin isolates the detection potential. Hence the quality of the signal will degrade over time at which point more lubricant will need to be added.

As mentioned in the design and theoretical section, CMR and gain is a highly desirable feature. The downfalls of the current design are the number of individual components which are sources of errors. Alternatively a single 8-pinDIP chip can replace the 3 op-amp IA configuration. This chip AD620 by Analogue Electronics is specifically designed for medical instrumentation. Figure 8 illustrates the superior accuracy and current efficiency of a dedicated IA over a 3 precision op-amps in an IA configuration.

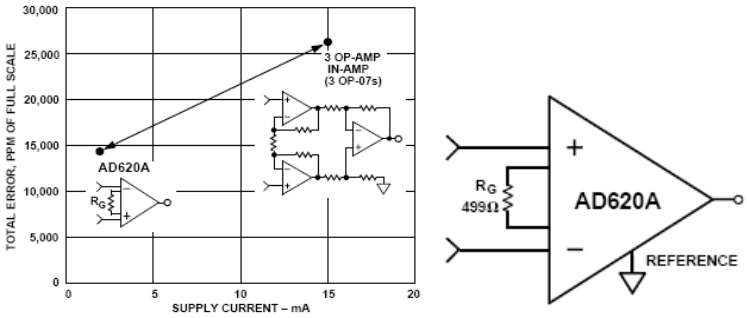

Figure 8 - Three Op-amp IA configurations Vs. AD620 (left) and AD620 (right)

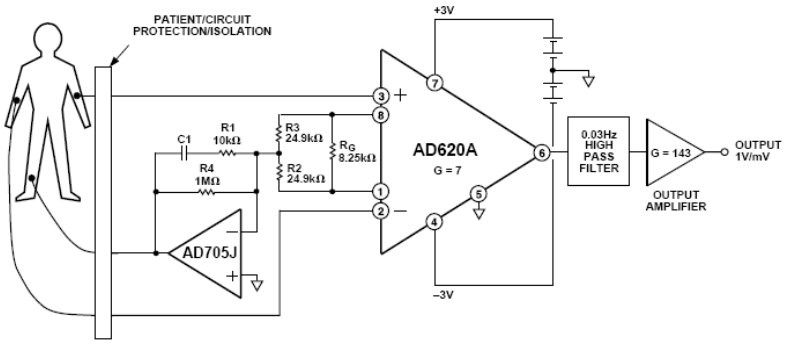

Figure 9 - Example of AD620 Implementation

For additional safety to the user, an isolation amplifier or circuit protection can be implemented between the input terminals of the amplification stage and the probes instead of the current limiters in the circuit as shown in Figure 9. Isolation of currents is usually achieved optically or inductively to prevent coupling. Examples of such are the AD202 by Analogue Devices.

Inclusion of a specific IA and isolation amplifier represents another step up in cost. Due to the educational nature of this project, specialized components was not used but can be applied to replace existing components.

7 Conclusion

This implementation of a heart monitor involves low cost amplifier and filter components coupled with a sophisticated microcontroller and LCD screen. Because the device is most useful if it is portable it was designed with use of one or two 9V batteries.

The amplifier and filter stage of the implementation were successful with an ECG successfully detected and recorded. In doing this the output voltage was found to be strongly related to the quality of contact between the electrodes and the skin and was observed to be highly variable. This complicated the calculation and display of the actual rat since the proposed microcontroller code relied on a fixed reference which the peak of the ECG would cross and trigger the timer. The variability of the voltage output made this approach unfeasible. Using a fixed signal made demonstration of this part of the circuit possible

This project successfully implemented an ECG while the Digital Heart Rate counter was only partially successful. The weak signal heart rate signal was amplified in the presence of noise from other muscles and electrical sources but we were unable to create an integrated device which could take this signal and calculate the heart rate.

8 Appendix A: Labelled photographs of assembled breadboard and PCB circuit

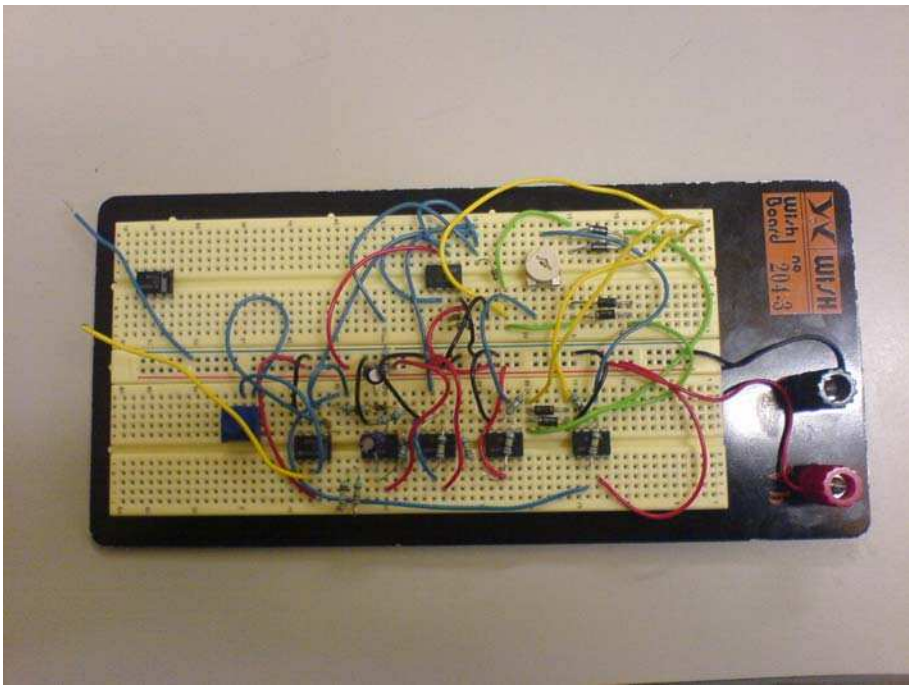

Figure 10 - Breadboard Implementation of Bio-Signals Amplifier

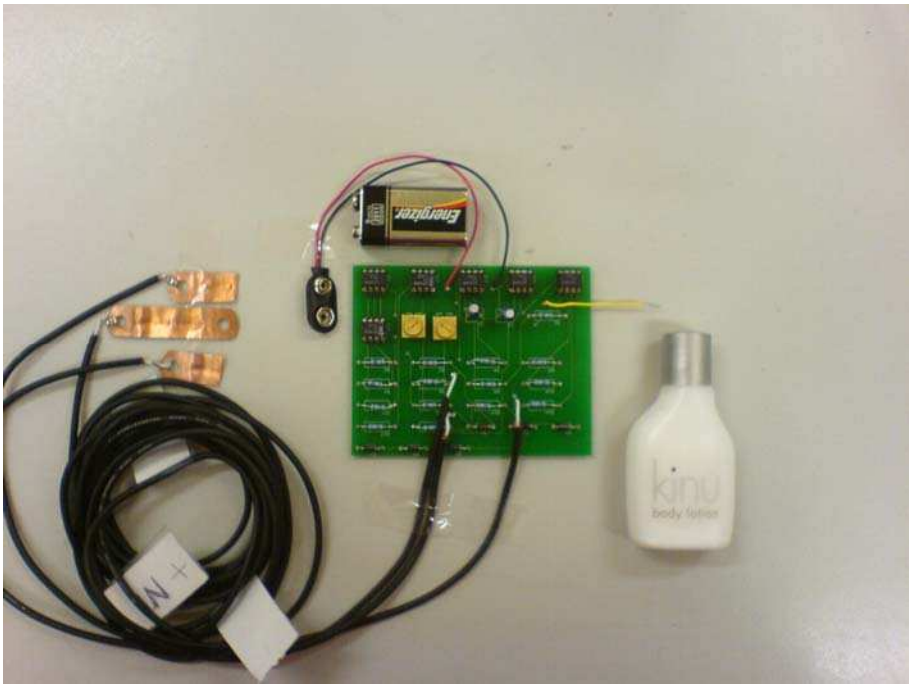

Figure 11 - Amplifier Stage and Components

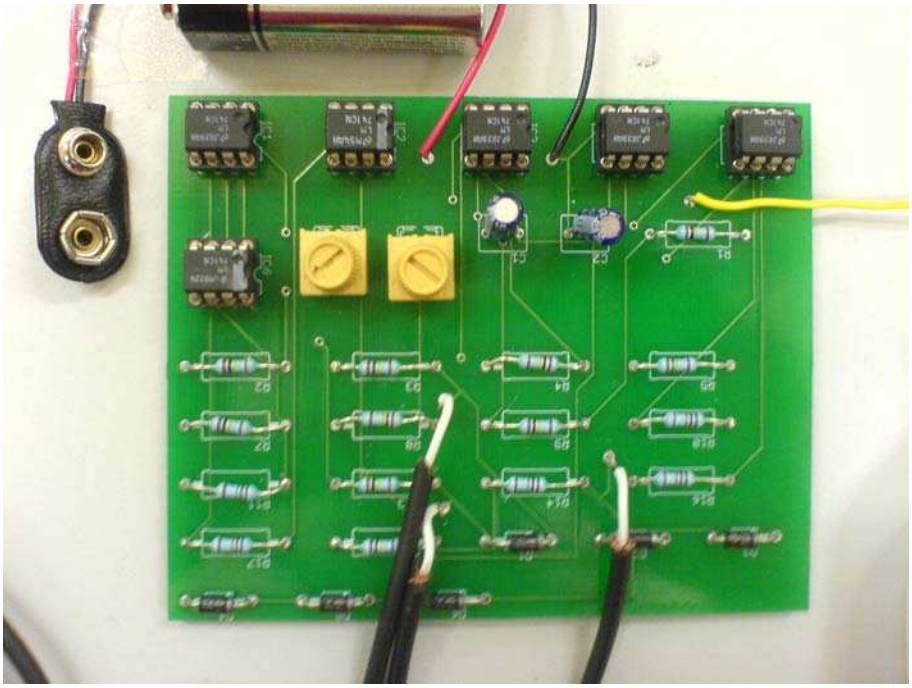

Figure 12 - Bio-signals Amplification PCB up close

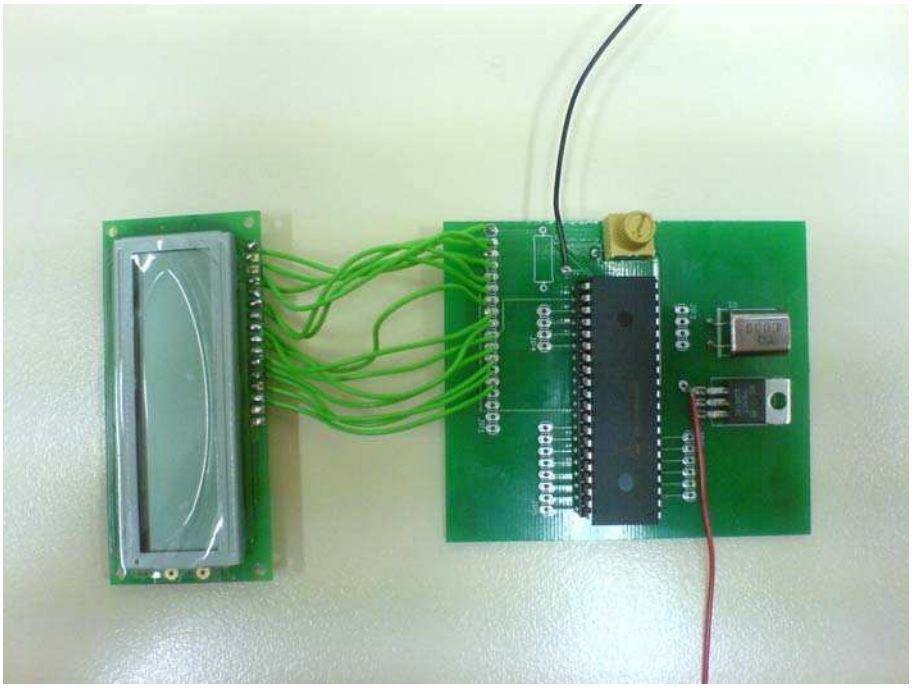

Figure 13 - Processing and Display Stage

9 Appendix B: PSPICE/MATLAB Implementation

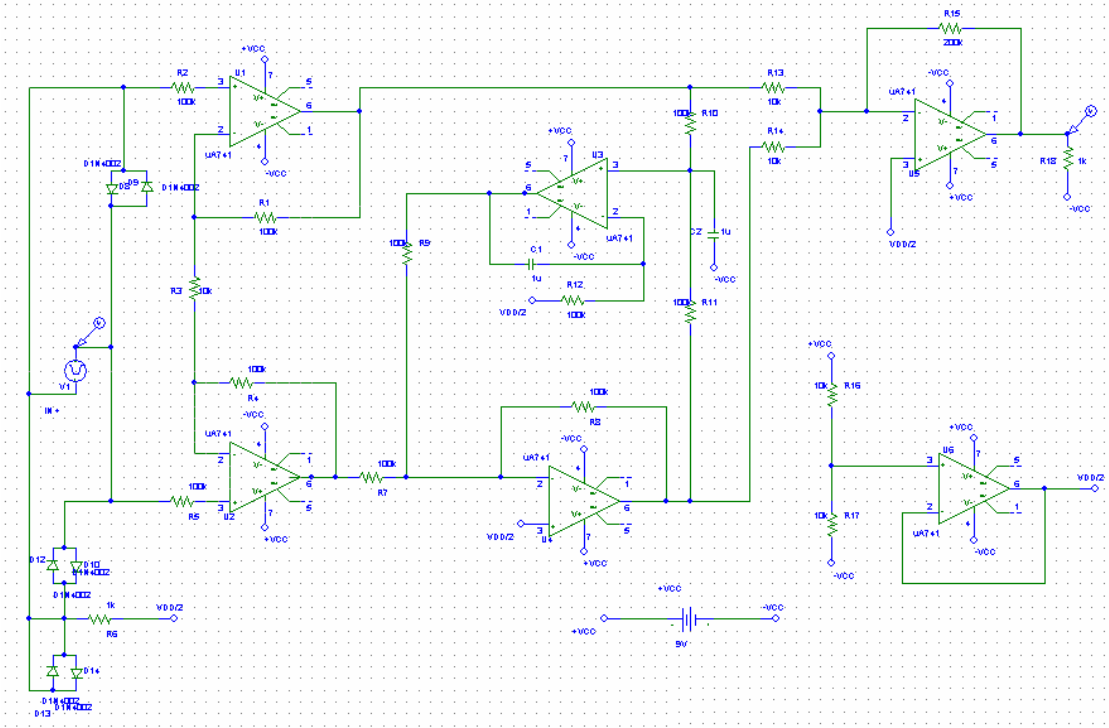

V_{SOURCE} on the left replicates a heart ECG signal. This schematic contained too many nodes for our student edition of the program to simulate.

10 Appendix C: EAGLE PCB Layout design

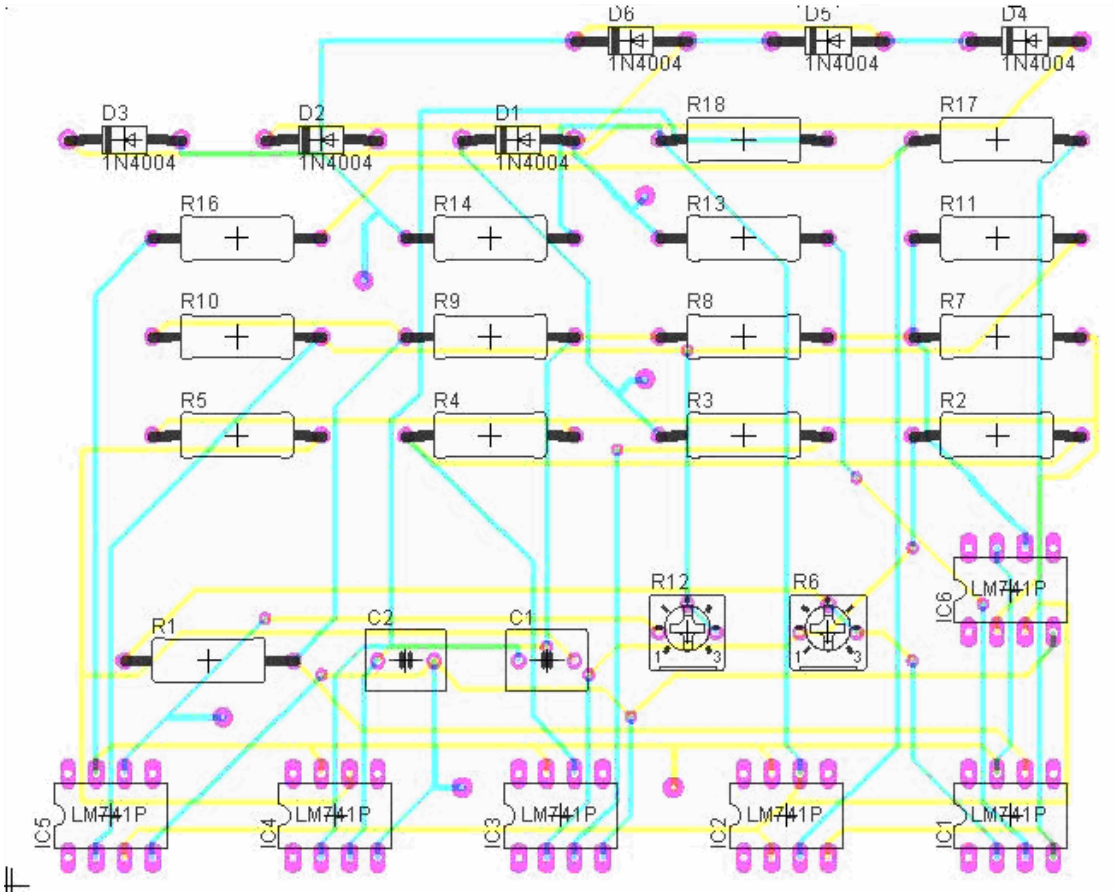

Figure 14 - PCB Design for Amplification Stage

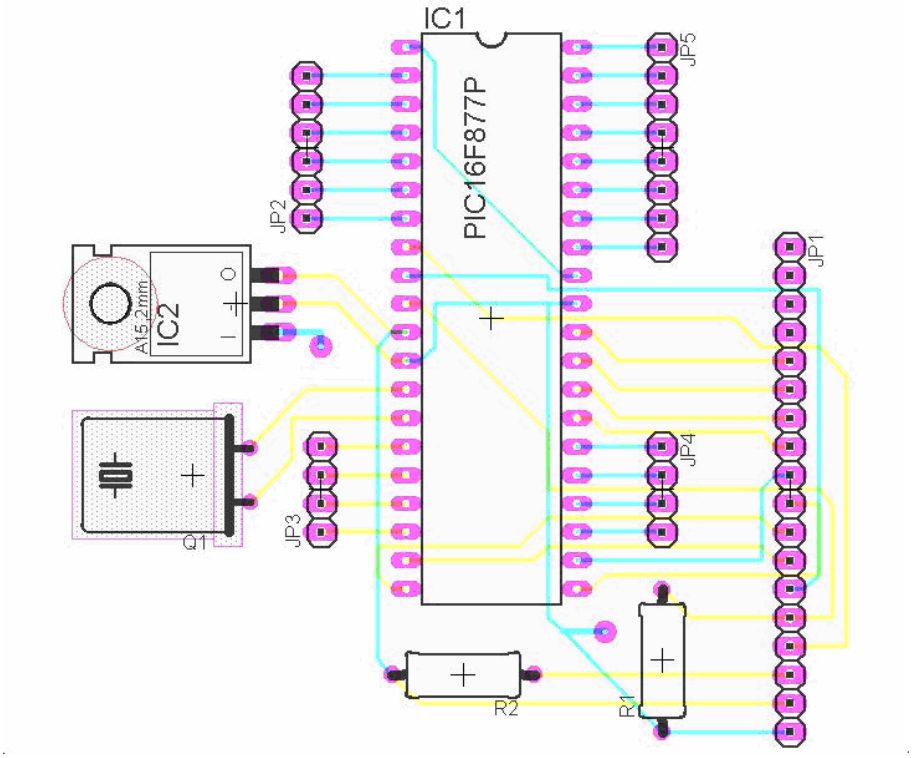

Figure 15 - PCB Design for Processing Stage

11 Appendix F: Cost Breakdown

Components	Price Ea.	Quantity	Cost
Amplification stage			
LM741 General Purpose Operational Amplifier	$1.95	6	$11.70
8-pin IC Socket Machine Pin	$1.82	6	$10.92
Resistors	N/A		
Capacitors	N/A		
9V Battery Holder Tab	$0.45	1	$0.45
Shielded cable	$0.82 per meter	3	$2.46
9V Battery Holder Tab	$3.96	1	$3.96
Processing and Display			
PIC16F877A microcontroller	$15	1	$15.00
20-pin IC Socket Machine Pin	$3.95	1	$3.95
Liquid Crystal Display (LDC) Module	$19.96	1	$19.96
4-Mhz Crystal	$3.97	1	$3.97
LM7805 5V Voltage Regulator	$1.20	1	$1.20
9V Battery Holder Tab	$0.45	1	$0.45
Miscellaneous			
Printed Circuit Board	N/A		
Lubricant	N/A		
Conduction Tabs	N/A		
Total			$74.02

12 Appendix G: References

A. C. Metting van Rijn, A. Peper, C. A. Grimbergen "HIGH QUALITY RECORDING OF BIOELECTRIC EVENTS. II : A LOW-NOISE, LOW-POWER MULTICHANNEL AMPLIFIER DESIGN" Laboratory of Medical Physics, University of Amsterdam, Academic Medical Center, Meibergdreef 15, 1105 AZ Amsterdam, The Netherlands

"3 Opamp Instrumentation Amplifier" eCircuit Centre 2002 http://www.ecircuitcenter.com/Circuits/instamp1/instamp1.htm

LM741 Operational Amplifier SD009341 August 2000, National Semiconductor Corporation

PIC16F87XA Datasheet DS39582B 2003 Microchip Technology Inc.

AD620 "Low Cost, Low Power Instrumentation Amplifier" Rev E. 1999 Analog Devices

AN 682 DS00682C "Using Single Supplly Operational Amplifiers in Embedded Systesms" 2000 Microchip Technology Inc.