Security at the Edge with Machine Learning

Creating a Correlated Network and Power Dataset for IoT IDS

Ian Kenny | Supervisor: Prof. Emanuel Popovici | Co-Supervisor: Dr. Colin Murphy

BE Electronic Engineering · University College Cork

Motivation

- IoT devices face large, growing attack surfaces
- Resource-constrained with limited built-in security
- ML-based IDS require high-quality training data
- Power side-channels reflect internal device state
- Attacks affect both network traffic and power draw

Research Gap

- Network-only datasets: ToN-IoT, Edge-IIoTset, IoT-23
- Power-only side-channel datasets: Dragon Pi
- No synchronised multimodal dataset exists
- Joint network + power IDS research is limited
- This framework directly addresses that gap

SYSTEM ARCHITECTURE

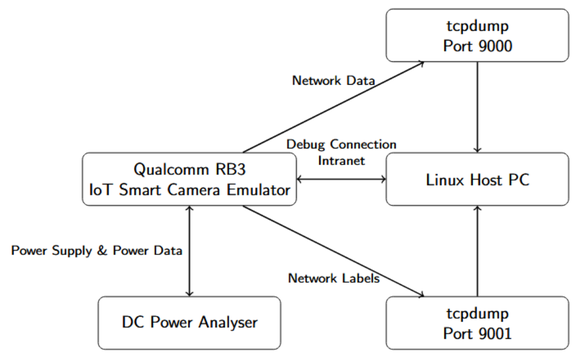

IoT Device Emulation

- Smart camera emulated in C
- Idle + active capture phases
- TCP uploads, randomised timing
- UDP JSON event labels per phase

Data Collection

- Network traffic → PCAP (tcpdump)
- Power sampled at 4,900 Hz
- Labels on separate port 9001
- Python merges both streams

Synchronization

- Both streams → shared master time
- JSON start event as network anchor
- Power CSV start time as offset
- Linear interpolation at merge step

CURRENT vs TIME

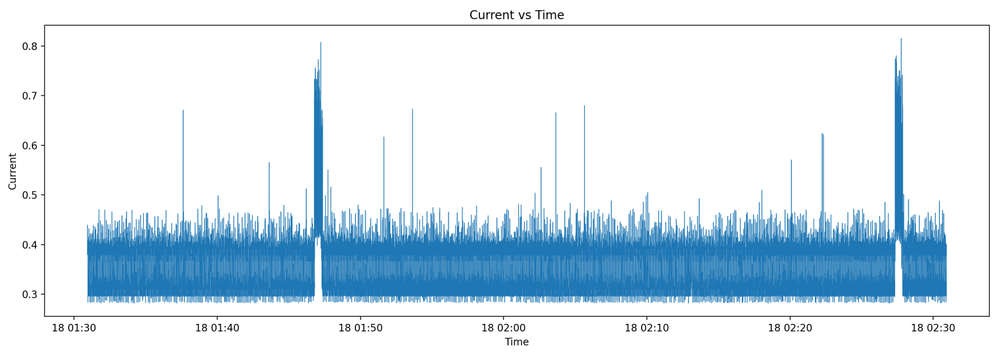

PACKET RATE vs TIME

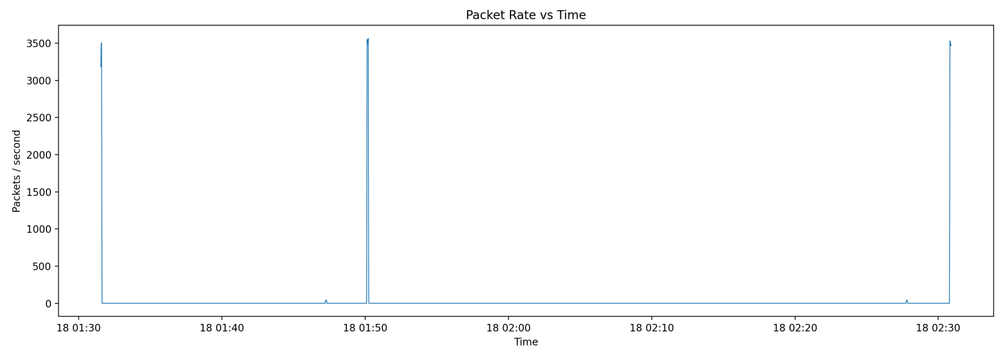

CURRENT DISTRIBUTION BY LABEL

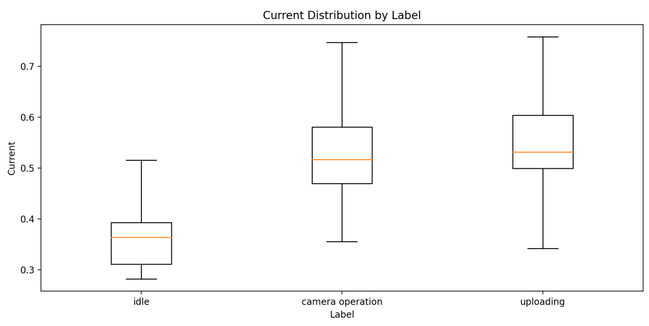

Dataset Structure

- date, time — master timestamp
- current — 4,900 Hz power signal
- source, dest, protocol, length
- Labels: idle / camera op / upload

Future Work

- Controlled attack scenarios
- DoS, brute-force, port scanning
- Multimodal ML model training
- Network-only vs combined IDS