Security at the Edge with Machine Learning

Creating a Correlated Network and Power Dataset for IoT IDS

Ian Kenny | Supervisor: Prof. Emanuel Popovici | Co-Supervisor: Dr. Colin Murphy

BE Electronic Engineering · University College Cork

Motivation

- IoT devices face large, growing attack surfaces
- Resource-constrained with limited built-in security
- Traditional IDS struggle to detect novel attacks
- ML-based IDS can model normal behaviour and flag deviations
- Power side-channels reflect internal device state
- Attacks affect both network traffic and power consumption
- Multimodal data enables richer anomaly detection

Research Gap

- Network-only datasets: ToN-IoT, Edge-IIoTset, IoT-23
- Power-only side-channel datasets: Dragon Pi
- No publicly available synchronised multimodal dataset
- Joint network + power IDS research is constrained
- Existing frameworks are domain-specific or single-modality
- Reproducible controlled testbeds are scarce
- This framework directly addresses that gap

SYSTEM ARCHITECTURE

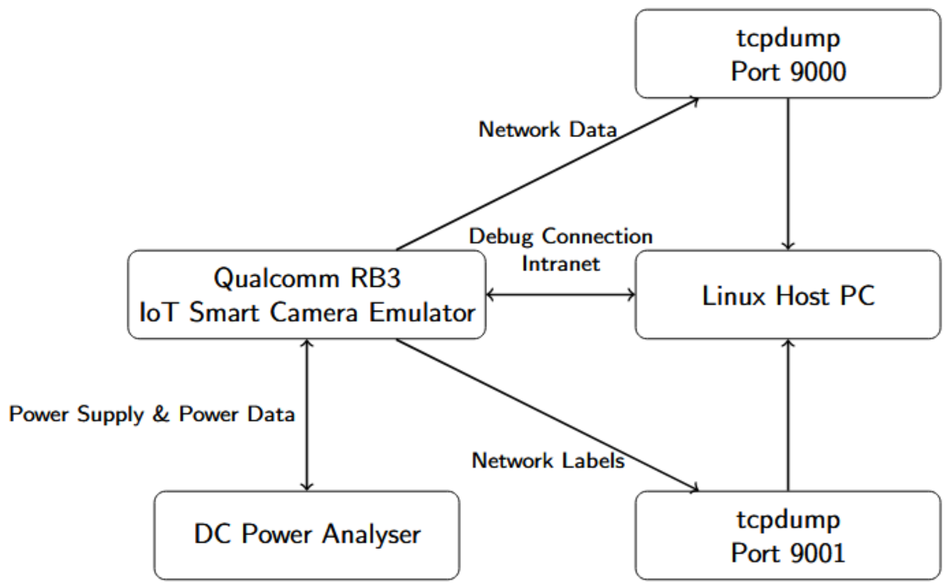

IoT Device Emulation

- Smart camera behaviour written in C
- Idle periods and active capture phases
- TCP file uploads to host machine
- Randomised inter-phase timing for realism
- UDP JSON event labels transmitted at each phase
- Cross-compiled for ARM and deployed via SCP

Data Collection Pipeline

- Network traffic captured as PCAP via tcpdump
- Host-side capture avoids overhead on device
- Power sampled externally at 4,900 Hz (Agilent N6705A)
- Labels transmitted on dedicated port 9001
- Label packets excluded from training dataset
- Python pipeline merges and exports final CSV

Synchronization Method

- Both streams independently timestamped
- Converted to a shared master time reference
- JSON program-start event anchors network stream
- Power CSV capture start time as power anchor
- Linear interpolation fills gaps at merge step
- No artificial disturbances introduced to power signal

CURRENT vs TIME

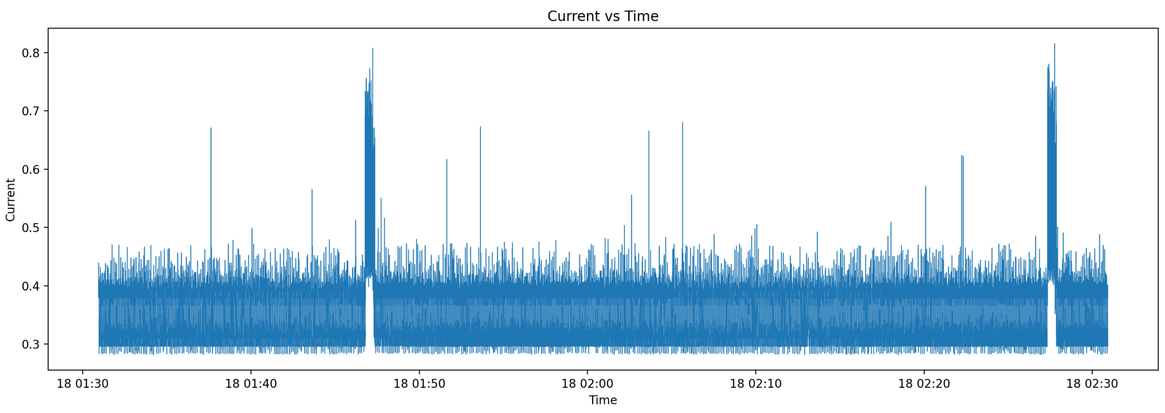

PACKET RATE vs TIME

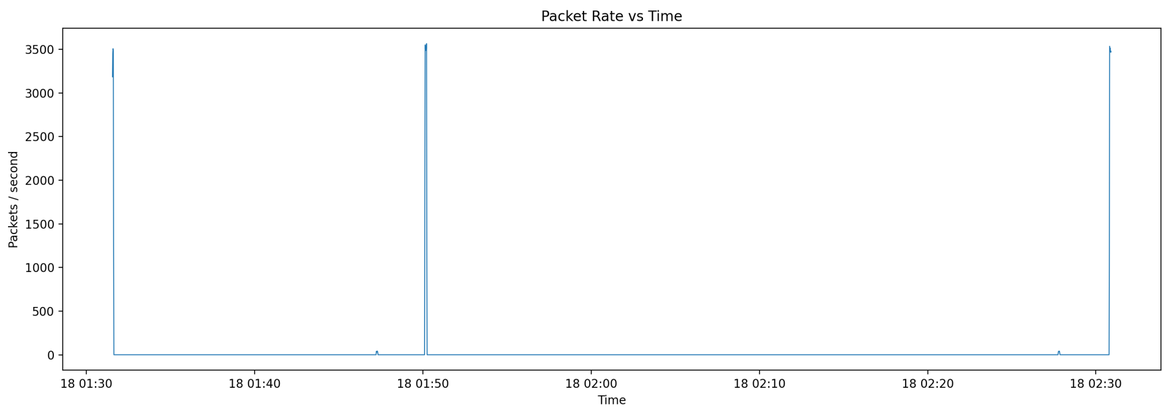

CURRENT DISTRIBUTION BY LABEL

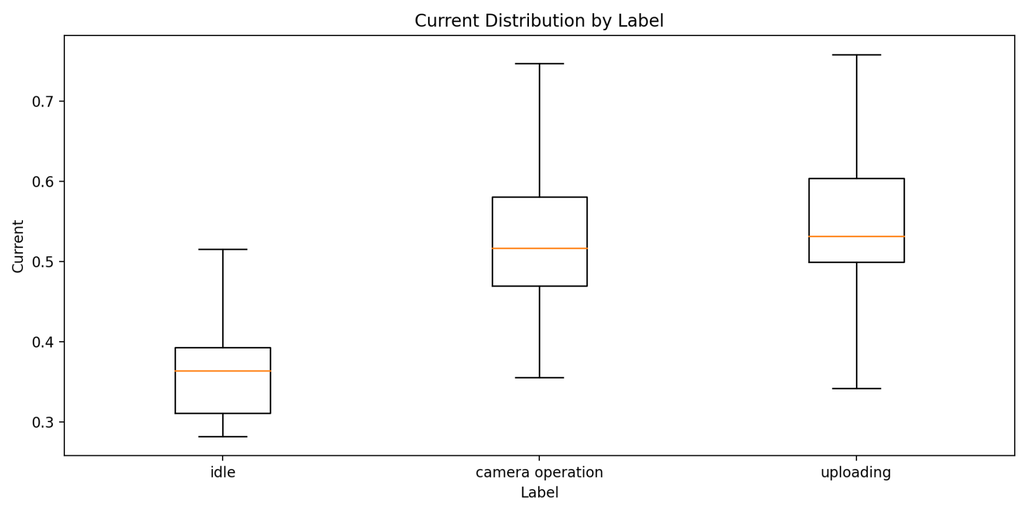

Dataset Structure

- date / time — unified master timestamp
- current — 4,900 Hz continuous power signal
- source, dest, protocol, length, info
- Labels: idle / camera operation / uploading

Future Work

- Execute DoS, brute-force, port-scan attacks
- Feature extraction from both modalities
- Train & compare uni- vs multimodal IDS models