Applicant:	GIGACLOUD TECHNOLOGY (USA) INC.		
Address:	4388 SHIRLEY AVE, EL MONTE, CA 91731		
Contact:	LUNJIA LI		
TEL:	(626)912-8886	**FAX:**	-
E-mail:	minhhanh.wood@yahoo.com.vn, nhaphuong@gigacloudtech.com mh-purchase1@minhhanhvn.com ls@gigacloudtech.com		
Copy To:	-		

OVERALL RATING

PASS	**X**
FAIL	**-**
DATA	**-**

Sample Information			
Sample Description	FULL OVER FULL WITH BOOKSHELF		
Style Number	-		
SKU	N708P255401/ N708P255402/ N708P255403		
Vendor Name	GIGACLOUD TECHNOLOGY(USA) INC.		
Vendor style number	YMX		
Quantity	-	**PO Number**	-
Buyer's Name	GIGACLOUD	**Manufacturer**	GIGACLOUD TECHNOLOGY(USA) INC.
Country of Origin	Viet Nam	**Country of Destination**	USA
Code Number	-	**Date of production**	-
Reference item/ style number	-	**Color**	WHITE/GRAY/ ESPRESSO
Date of Submission	Aug. 26, 2025	**Test Performance Dates**	Aug. 26, 2025
Testing Status			
Pre-Shipment Lead Test	☐	**Test for Protocol**	-
Retest	☐	**Previous Report No.: -**	

Sample Photo

EFFN25081979-CG-01

For and on behalf of
Eurofins MTS Consumer Product Testing Vietnam Ltd.

HARRY VU
HARDLINES LAB. ASSISTANT MANAGER

EXECUTIVE SUMMARY:

TESTING RESULT SUMMARY				
Test Property	**PASS**	**FAIL**	**DATA**	**COMMENTS**
Total Lead Content in Paint or Similar Surface Coating	X	-	-	-
Total Lead Content - 15 U.S. Code §1278a	X	-	-	-
ASTM F1427 – 21e1 Standard Consumer Safety Specification for Bunk Beds	X	-	-	-
16 CFR Part 1213 Safety Standard for Entrapment Hazards in Bunk Beds	X	-	-	-
16 CFR Part 1513 Requirements for Bunk Beds	X	-	-	-
Sharp Point, Sharp Edges	X	-	-	-

COMPONENT BREAKDOWN LIST:

Test Item	Component Description
01	Silvery metal (Allen head bolt)
02	Silvery metal (Allen head bolt) (Same item 1)
03	Silvery metal (Allen head bolt)
04	Silvery metal (Allen head bolt) (Same item 3)
05	Silvery metal (Allen head screw)
06	Silvery metal (Allen head screw) (Same item 5)
07	Silvery metal (Cross dowel)
08	Espresso coating on wood (Color panel)
09	Natural wood (Bunk bed)
10	Grey coating on wood (Color panel)
11	Silvery metal with golden plating (Hardware)
12	Silvery metal (Shelf pin)
13	Plywood (Bunk bed)
14	MDF wood (Bunk bed)
15	White coating on wood (Color panel)

Remark:

(1) Test result was transferred from report# EFFN25020464-CG-01.
(2) Test result was transferred from report# EFFN25020466-CG-01.
(3) Test result was transferred from report# 76124-090626 Revised 1.
(4) Test result was transferred from report# EFFN25030041-CG-01.
(5) Test result was transferred from report# 76124-091099 Revised 1.
(6) Test result was transferred from report# 76124-080921.
(7) Test result was transferred from report# EFFN25040068-CG-01.

EXHIBIT BREAKDOWN:

TEST RESULT(S):

1. Total Lead Content in Paint or Similar Surface Coating – U.S 16 CFR 1303, 15 U.S. Code §1278a and U.S. Consumer Product Safety Improvement Act of 2008 (CPSIA), Title I, Section 101

Test Method: CPSC-CH-E1003-09.1. Analysis was performed by ICP-OES/ ICP-MS.

Test Item	Total Lead (Pb) (ppm)		Conclusion
	Result	Limit	
08(4)	ND	90	PASS
10(2)	48	90	PASS
15(1)	ND	90	PASS

Note: ND = Not Detected (Lab reporting limit: 10 ppm)
ppm = part per million = mg/kg = milligram per kilogram

2. Total Lead Content in Accessible Substrate – 15 U.S. Code §1278a and U.S. Consumer Product Safety Improvement Act of 2008 (CPSIA), Title I, Section 101

Test Method:
1) Metal components: CPSC-CH-E1001-08.3. Analysis was performed by ICP-OES/ ICP-MS.
2) Non-metal materials including plastics, glass and leather material: CPSC-CH-E1002-08.3. Analysis was performed by ICP-OES/ ICP-MS.

Test Item	Total Lead (Pb) (ppm)		Conclusion
	Result	Limit	
01(3)	ND	100	PASS
03(3)	ND	100	PASS
05(3)	ND	100	PASS
07(3)	ND	100	PASS
08(4)	ND	100	PASS
09	NA	100	NA
10(2)	ND	100	PASS
11(6)	ND	100	PASS
12(7)	ND	100	PASS
13(5)	ND	100	PASS
14(5)	ND	100	PASS
15(1)	ND	100	PASS

Note: ND = Not Detected (Lab reporting limit: 10 ppm)
NA = Not Applicable
ppm = part per million = mg/kg = milligram per kilogram

3. ASTM F1427 – 2021e1 Standard Consumer Safety Specification For Bunk Beds

Clause	Requirement	Rating	Notes
4 Performance Requirements:			
4.1 Vertical Protrusions:			
4.1.1	All vertical protrusions along the top inside surfaces of any individual component (including but not limited to bed end structures and guard rails) of the upper bunk shall not extend more than 3⁄16 in. (4.8 mm) above the upper edge of the adjacent surface. Ladder stiles (uprights) shall not extend more than 3⁄16 in. (4.8 mm) above the upper edge of the adjacent surface.	P	☑ Vertical protrusion: ____0.15___in. Position: corner post ☑ Ladder stiles: ___0____ in.
4.1.2	Any cap used along the top surface of the upper bunk shall not have a vertical protrusion greater than 3⁄16 in. (4.8 mm) at the edge of the protrusion above the upper edge of the adjacent surface. If the cap is flush with or overhangs the edge of the corner post or other vertical protrusion, the maximum vertical protrusion shall not exceed 3⁄16 in. (4.8 mm). The cap shall have a maximum height of no more than 20% of the width or diameter of the cap. At no point shall the cap overhang the post more than 1⁄16 in. (2 mm). The cap shall fit flush with the top of the corner post.	NA	☐ H: _____in. W: _____in. (H_{max} = 20%W) ☑ No cap
4.2	Fit of Top Bed to Bottom Bed: The bed post shall be designed so that the minimum height of lift to allow horizontal disengagement of the top bed from the bottom bed shall be 1.25in., or a fastening mechanism may be used that will prevent the disengagement of the top bed from the bottom bed.	P	Record: __2-1/2___in. ☐ A fastening mechanism provided ☐ Bed post no separate
4.3	Mattress and Foundation Size and Fit (Top Bed): There shall be no gaps between the interior bed structure and the edges of the mattress and foundation that will permit complete passage of the wedge block when tested in accordance with 5.2.	P	
4.4	Mattress Size and Fit (Lower Foundation): There shall be no space, between the edge of the manufacturer's recommended mattress and the interior boundary of any component(s) attached to lower bunk (for example, ladders, book shelves, desk), greater than 1.88 in. (48 mm) and smaller than 9 in. (229 mm), when tested in accordance with 5.3.	P	
4.5 Upper and Lower Foundation Support Systems:			
4.5.1	The foundation support systems shall confine the horizontal position of the mattress and the foundation and shall prohibit the mattress and foundation from falling when the mattress or foundation is manipulated.	P	
4.5.2	In the event cross-members are utilized, a minimum of two per bed are required. If more than two cross-members are utilized, they shall be spaced so that the distance between adjacent cross-members or between the cross-members and the bed end structures will not permit complete passage of the wedge block or will allow complete passage of both the wedge block and the 9 in. (229 mm) diameter rigid sphere when tested in accordance with 5.9.	P	Upper foundation: -Slat to slat: _3-1/4_in. -Slat to Bed end structure: __2-1/8_in. Lower foundation: -Slat to slat: _3-1/4 in. -Slat to Bed end structure: _2-1/4_in.
4.5.3	The foundation support system shall not be capable of being dislodged without the release of positive fastening devices or the use of hand tools.	P	
4.5.4	The foundation support system shall not fail when tested in accordance with 5.4.	P	
4.6 Side Rails:			

Clause	Requirement	Rating	Notes
4.6.1	Bolt-On Side Rails, that attach at their ends or on their side to the bed post, are secured at each end by **__2__ bolts** with a minimum size of **__M6___ diameter/ ISO/ANSI size M6** *(REQ: ≥0.25 in. diameter or M6)* If it is wood bed, these bolts are spaced a minimum of: **_1-7/8_in.** apart on their center. *(REQ: ≥1.5in.)* When the bolts are fully tightened in the assembled bed, no more than **0.25 in**. of thread is exposed? **Yes**	P	If it is Hook-On side rail, NA
4.6.2	Hook-On Side Rails, securely attached to the bed post. Hook-on attachments shall require an additional action other than an upwards force to disengage.	NA	If it is Bolt-On side rail, NA
4.6.3	Side Rail Attachments: There shall be no structural failure of bed side rail fastening systems when tested in accordance with 5.5.	P	
4.7 Guardrails:			
4.7.1	The underside of the foundation is: **__48__in.** from the floor. *(REQ: over 30 inches.)* How many guardrail(s) accompany the bed: **__2__** *(REQ: 2 guardrails.)*	P	
4.7.2	Any intentional release of fastening device is present for guardrails so that they cannot be removed unless forces are applied sequentially in different direction? **Yes**	P	
4.7.3	The upper edge of the guardrails is: **__6-3/4__ in.** above the sleeping surface when a mattress of the thickness that is the maximum specified by the manufacturer's instruction is used on the bed. *(REQ: ≥ 5in.)*	P	
4.7.4	With no mattress on the bed, there shall be no openings in the rigid bed structure below the lower edge of any opening of the guardrail that would permit complete passage of the wedge block when tested in accordance with 5.6.	P	
4.7.5	The guardrail terminate before reaching the bed end structure, the distance between either end of the guardrail and the bed end structures in the same plane when measured at a point 5 in. above the sleeping surface as established by the maximum mattress thickness specified by the manufacturer: **__0__in.** *(R: ≤ 15in.)* The second guardrail terminate before reaching the bed end structure, the distance between either end of the guardrail and the bed end structure when measured horizontally between the bed end structure and the nearest point on the guardrail: **_0_in.** *(R: ≤ 0.22in.)*	P	
4.8 Bed Structure:			
4.8.1	The total distance between the two posts at the head of the upper bunk: **__51-1/2__in.** The distance between the two posts at the head of the upper bunk at 5 in above the sleeping surface: **__51-1/2__in.** Percentage of that at the head: **__100__%** *(R: ≥ 50%)* The total distance between the two posts at the foot of the upper bunk: **__51-1/2_in.** The distance between the two posts at the foot of the upper bunk at 5in above the sleeping surface: **__35-3/4__in.** Percentage of that at the foot: **__69.4_%** *(R: ≥ 50%)*	P	
4.8.2	There shall be no openings in the rigid end structures of the upper bunk/bunks that will permit the free passage of the wedge block when tested in accordance with 5.7.1. This requirement shall apply only to those portions of the bed end structure that are above the foundation support system of the upper bunk/bunks.	P	

Clause	Requirement	Rating	Notes
4.8.3	When tested in accordance with 5.7.2, there shall be no openings within the entire boundary of the lower bunk that will permit free passage of the wedge block, unless they are large enough to permit the free passage of a 9 in. (229 mm) diameter rigid sphere. This requirement does not apply to openings that are below the level of the lower bunk foundation support system. This requirement shall apply to that portion of the bed structure that is between the level of the lower bunk foundation support system and the level of the upper bunk foundation support system. Such openings include, but are not limited to, bed end structures, foundation, ladders, desks, or bookshelf components, or a combination thereof, as offered with the bed for purchase and designed to be attached to the bed structure.	P	
4.8.4	When tested in accordance with 5.7.2.3 and 5.7.2.4, all portions of the boundary of any opening of the entire lower bunk boundary that permits free passage of a 9 in. (229 mm) diameter rigid sphere also must conform to the neck entrapment requirement.	P	
4.9 Ladders:			
4.9.1	Type of ladder: **incorporated as part of the bed structure** Is the ladder attached in a manner that prevents inadvertent disengagement, repositioning, or tilting while in use? **Yes**	P	☐ Not Provided ☐ No Ladder
4.9.2	Are there openings between ladder structures that allow complete passage of the wedge block? **Yes** If Yes, does the 9 in. diameter rigid sphere pass freely through the openings? **Yes** Width of the ladder measured from the inside of the stiles: **14-1/2 in.** *(R: ≥10in.)* (a) Vertical spacing of ladder steps measured between steps: **11-5/8 in.** *(R: ≤12in.; if bed structure are used as ladders, vertical spacing ≤16in.)* (b) Vertical spacing of ladder steps measured from the floor to the first step: **11-3/4 in.** *(R: ≤12in.; if bed structure are used as ladders, vertical spacing ≤16in.)*	p	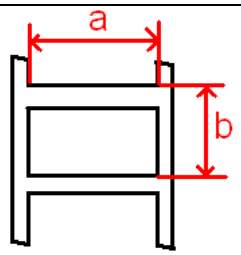
4.9.3	Are there openings between the ladder step and the upper bunk boundary that allow complete passage of the wedge block? **No** If Yes, does the 9 in. diameter rigid sphere pass freely through the openings? **Yes/No**	P	
4.9.4	For ladders attached to the side of the lower bed and for which mattress height is above the side rail, there shall be no gaps between the edge of the manufacturers recommended mattress and the interior vertical stile between 1.88 in. (48 mm) and 9 in. (229 mm) when tested in accordance with 5.3.	NA	Record: ____in.
4.10	Metal Beds: Frame and Fastenings: There shall be no separation of any of the attachments of the foundation support system to the end structures of the bed when tested in accordance with 5.8.1.1 and 5.8.2.	NA	
5 Test Methods:			
5.1	Is the bed assembled in accordance with the provided instructions? **Yes**	P	
5.2 Mattress and Foundation Size and Fit—Upper Foundation:			
5.2.1- 5.2.3	Is any gap produced in the horizontal plane between the interior bed structure and the edges of the mattress and foundation as per section 5.2.2? **Yes** If **Yes**, does the wedge block pass through the gap(s) as per section 4.3 ? **No**	P	If F, attach photo and locate the failure gap(s): _____

Clause	Requirement	Rating	Notes
5.3	Mattress Size and Fit—Lower Foundation Are there any space between the edge of the manufacturer's recommended mattress and the interior boundary of any attached component is between 1.88 in. (48 mm) and 9 in. (229 mm)? **No**	P	
5.4	Foundation Support System Does the foundation support system remain in place for a minimum of 5 min as per section 4.5.4? **Yes**	P	
5.5	Side Rails Apply force at Corner 1 of the bed? **Yes** Apply force at Corner 2 of the bed? **Yes** Apply force at Corner 3 of the bed? **Yes** Apply force at Corner 4 of the bed? **Yes** Is there no structural failure of bed side rail fastening systems as per section 4.6.3? **Yes**	p	
5.6	Guardrails Is there no opening in the rigid bed structure below the lower edge of any opening of the guardrail that would permit complete passage of wedge block as per section 4.7.4? **Yes**	P	
5.7 Bed End Structures:			
5.7.1	Is there no opening in the rigid end structures of the upper bunk that will permit the free passage of the wedge block as per section 4.8.2 **Yes** *(This requirement shall apply only to that portion of the bed end structure that is above the foundation support system of the upper bunk.)*	P	
5.7.2 Lower Bunk Boundaries:			
5.7.2.1	Without a mattress or foundation on the lower bunk foundation support, place the wedge block into any opening, tapered side first, in the most adverse orientation. Determine if the wedge block can pass freely through the opening. If the wedge block passes freely through the opening, determine if a 9 in. (229 mm) diameter rigid sphere can pass freely through the opening.	P	
5.7.2.2	With the manufacturer's recommended mattress and foundation size in place, on the lower bunk foundation support, repeat the test in 5.7.2.1.	P	
5.7.2.3- 5.7.2.4	Is any portion of the boundary of any opening of the lower bunk end structure that permits free passage of a 9 in. diameter rigid sphere? **Yes** If **Yes**, is there simultaneous contact between the boundary of the opening and both sides of the A section of the template? **Yes** If **Yes**, does the neck portion of the B section of the template completely enter the opening (passes 0.75in. or more beyond the points previously contacted by the A section of the template)? **No** If **Yes**, does its lower boundary slope downward less than 45º for the whole distance from the narrowest part of the opening the neck can reach to the part of the opening as per section 4.8.4? ***Yes/ No/ NA**	P	
5.8 Metal Beds- Frame and Fastenings:			
5.8.1- 5.8.1.1	Number of cycle _____/_____ Number of loads per minute: _____ *(R: ≤24 loads per minute)* Is there no separation of any attachments of the foundation support system to the end structure of the bed as per section 4.10? **Yes**	NA	
5.8.2	Apply _____ force at each point of attachment of the foundation support system to the end structure. Is there no separation of any attachments of the foundation support system to the end structure of the bed as per section 4.10? **Yes**	NA	

Clause	Requirement	Rating	Notes
5.9	Are cross-members utilized? **Yes** If **Yes**, Number of cross-members per bed: Upper bunk bed **14** & Lower bunk bed **14** *(R: ≥2)* If **More than 2**, does any gap(s) between adjacent cross-members or between the cross-members and the bed end structure permit complete passage of the wedge block? **No** If **Yes**, does the gap(s) also permit complete passage of the 9 in. diameter rigid sphere? **Yes/ No** *This requirement applies to both the upper and lower bunk foundation support systems.*	P	
5.10 Permanency of Labels and Warnings			
5.10.1-5.10.2	It is a **Paper Label** Label on the bed Is it a permanent label as tested per section 5.10.1 or 5.10.2? **Yes**	P	
5.10.3	Is the label attached by a seam? **Yes/ No** Does it detach when subjected to a 15-lbf. Pull force applied as per section 5.10.3? **Yes/ No**	NA	
5.10.4	Can the tape test defined in Test Method B, Cross –Cut Tape Test of Test Methods D 3359 apply on all the warnings label? **Yes/ No** Is the printing in the area tested legible or attached after being subjected to this test? **Yes/ No**	NA	
5.10.4.4	Shall the non-paper label during an attempt to remove it without the aid of tools or solvents, not be removed or not fit entirely within the small parts cylinder defined in 16 CFR 1501 if it can be removed? **Yes/ No**	NA	
6 Marking and Labeling:			
6.1	Each bunk bed set shall have label or marking to indicate the following: Name, City, State, & Zip code (1) of the manufacturer, distributor, or seller. Model number (2), the Month & Year (3) of manufacture	P	(1): GIGACLOUD TECHNOLOGY (USA) INC. 4388 Shirley Avenue El Monte, CA 91731 (2): N708P255401 / N708P255402 / N708P255403 (3): 08/2025
6.2	Warnings	--	--

Clause	Requirement	Rating	Notes
6.2.1.1	If the foundation is not an integral part of the bed structure, the warning label shown in either Fig. 10(a) or Fig. 10(b) shall be attached permanently to the inside of a bed end structure of the upper bunk in a location that cannot be covered by the bedding but that may be covered by the placement of a pillow. ⚠ **WARNING** **To help prevent** serious or fatal injuries from entrapment or falls: • Never allow a child under 6 years on upper bunk. • Use only mattress which is 74″–75″ long and 37 1/2″–38 1/2″ wide on upper bunk. • Ensure thickness of mattress and foundation combined does not exceed _____″ and mattress is at least 5″ below upper edge of guardrails. • Use guardrails on both sides of upper bunk. • Prohibit horseplay on or under bed(s). • Prohibit more than one person on upper bunk. • Use ladder for entering and leaving upper bunk. **STRANGULATION HAZARD** — Never attach or hang items to any part of the bunk bed that are not designed for use with the bed; for example, but not limited to, hooks, belts, and jumpropes. **DO NOT REMOVE THIS LABEL** *(a)* ⚠ **WARNING** **To help prevent** serious or fatal injuries from entrapment or falls: • Never allow a child under 6 years on upper bunk. • Use only mattress meeting the following specifications on upper bunk: Bed Type / Length / Width Standard Length / 74″–75″ / 37 1/2″–38 1/2″ Extra Long / 79″–80″ / 37 1/2″–38 1/2″ • Ensure thickness of mattress and foundation combined does not exceed _____ ″ and mattress is at least 5″ below upper edge of guardrails. • Use guardrails on both sides of upper bunk. • Prohibit horseplay on or under bed(s). • Prohibit more than one person on upper bunk. • Use ladder for entering and leaving upper bunk. **STRANGULATION HAZARD** — Never attach or hang items to any part of the bunk bed that are not designed for use with the bed; for example, but not limited to, hooks, belts, and jumpropes. **DO NOT REMOVE THIS LABEL** *(b)*	NA	

Clause	Requirement	Rating	Notes
6.2.1.2	If the foundation is an integral part of the bed structure, the warning label shown in either Fig. 10(c) or Fig. 10(d) shall be attached permanently to the inside of a bed end structure of the upper bunk in a location that cannot be covered by the bedding but that may be covered by the placement of a pillow. ⚠ **WARNING** **To help prevent** serious or fatal injuries from entrapment or falls: • Never allow a child under 6 years on upper bunk. • Use only mattress which is 74″–75″ long and 37 1/2″–38 1/2″ wide on upper bunk. • Ensure thickness of mattress does not exceed _____ ″ and mattress is at least 5″ below upper edge of guardrails. • Use guardrails on both sides of upper bunk. • Prohibit horseplay on or under bed(s). • Prohibit more than one person on upper bunk. • Use ladder for entering and leaving upper bunk. **STRANGULATION HAZARD** — Never attach or hang items to any part of the bunk bed that are not designed for use with the bed; for example, but not limited to, hooks, belts, and jumpropes. **DO NOT REMOVE THIS LABEL** *(c)* ⚠ **WARNING** **To help prevent** serious or fatal injuries from entrapment or falls: • Never allow a child under 6 years on upper bunk. • Use only mattress meeting the following specifications on upper bunk: Bed Type / Length / Width Standard Length / 74″–75″ / 37 1/2″–38 1/2″ Extra Long / 79″–80″ / 37 1/2″–38 1/2″ • Ensure thickness of mattress does not exceed _____ ″ and mattress is at least 5″ below upper edge of guardrails. • Use guardrails on both sides of upper bunk. • Prohibit horseplay on or under bed(s). • Prohibit more than one person on upper bunk. • Use ladder for entering and leaving upper bunk. **STRANGULATION HAZARD** — Never attach or hang items to any part of the bunk bed that are not designed for use with the bed; for example, but not limited to, hooks, belts, and jumpropes. **DO NOT REMOVE THIS LABEL** *(d)*	P	

Clause	Requirement	Rating	Notes
6.2.2	The height of the letters of the word "WARNING": **0.24 in**. (R: >0.1875 in. (4.8 mm) and uppercase boldface type.) The height of the letters of the word "DO NOT REMOVE THIS LABEL": **0.13 in**. (R: >0.125 in. (3.175mm) and uppercase boldface type.) The height of the words "To help prevent": **0.13 in**. (R: >0.125 in. (3.175mm) and boldface type.) The height of the remainder of the text in warning statement: **0.13 in**. (R: >0.125 in.(3.175mm)) The label contains sizes appropriate to that mattress as defined in the ISPA Voluntary Dimensional Guideline for Bedding Products and Components. **Yes** The label is attached to the inside of a bed end structure of the upper bunk. **Yes** The label is not covered by the bedding. **Yes** (Exception: it may be covered by the placement of a pillow.)	P	
6.2.3	Do warnings, including applicable mattress dimensional specifications, appear on the carton containing bed ends on at least one face and one end? **Yes** The height of the letters: **0.2 in**. (R: >0.1875 in.(4.8mm))	P	
6.3	Do the permanent labels (section 6.1) meet the requirement of section 5.10? **Yes** Do warning labels (section 6.2.1) applied to the bed meet the requirement of section 5.10? **Yes**	p	
7 Instructional Literature			
7.1	Is the instruction provided with the bed? **Yes**	P	
7.2	Are all parts necessary to assemble the bunk bed set listed? **Yes** Are the tools necessary for the bunk bed assembly listed as well? **Yes**	P	
7.3	Does the assembly instruction containing **detail diagram** showing exactly how the bed should be assembled? **Yes** It contains the specific instructions pertaining to the following: 7.3.1 Bed end structures **Yes** 7.3.2 Attachment of side rails **Yes** 7.3.3 Installation of the mattress/ foundation support system **Yes** 7.3.4 Fit of upper bunk to lower bunk **Yes** 7.3.5 Attachment of guardrail **Yes** 7.3.6 Attachment of ladder **Yes**	P	

Clause	Requirement	Rating	Notes
7.4	Is the size of the intended mattress clearly stated? **Yes** *Conventional Bedding term: **Full / Full** *Dimensions for finished mattress: Upper bed: **74" – 75"** (length) **x** **53-1/2"** (width) Lower bed: **74" – 75"** (length) **x** **53-1/2"** (width) Is the maximum thickness of the mattress that will ensure conformance to the guardrail provision of section 4.7.3 stated? **Yes**	P	
7.5	Is replacement parts information present? **Yes**	P	
7.6	Does the instruction contain the **Safety Warnings** as per section 7.6.1-7.6.13? **Yes**	P	
7.6.1	Follow the information on the warnings appearing on the upper bunk end structure and on the carton. Do not remove warning label from bed.	P	☑ Provided ☐ Not Provided
7.6.2	Always use the recommended size mattresses or mattress supports, or both, to help prevent the likelihood of entrapment or falls.	P	☑ Provided ☐ Not Provided
7.6.3	Surface of mattress must be at least 5 in. (127 mm) below the upper edge of guardrails.	P	☑ Provided ☐ Not Provided
7.6.4	Do not allow children under 6 years of age to use the upper bunk.	P	☑ Provided ☐ Not Provided
7.6.5	Periodically check and ensure that the guardrail, ladder, and other components are in their proper position, free from damage, and that all connectors are tight.	P	☑ Provided ☐ Not Provided
7.6.6	Do not allow horseplay on or under the bed and prohibit jumping on the bed.	P	☑ Provided ☐ Not Provided
7.6.7	Always use the ladder for entering and leaving the upper bunk.	P	☑ Provided ☐ Not Provided
7.6.8	Do not use substitute parts. Contact the manufacturer or dealer for replacement parts.	P	☑ Provided ☐ Not Provided
7.6.9	Use of a night light may provide added safety precaution for a child using the upper bunk.	P	☑ Provided ☐ Not Provided
7.6.10	Always use guardrails on both long sides of the upper bunk. If the bunk bed will be placed next to the wall, the guardrail that runs the full length of the bed should be placed against the wall to prevent entrapment between the bed and wall.	P	☑ Provided ☐ Not Provided
7.6.11	The use of water or sleep flotation mattresses is prohibited.	P	☑ Provided ☐ Not Provided
7.6.12	**STRANGULATION HAZARD**–Never attach or hang items to any part of the bunk bed that are not designed for use with the bed; for example, but not limited to, hooks, belts and jump ropes.	P	☑ Provided ☐ Not Provided
7.6.13	Keep these instructions for future reference.	P	☑ Provided ☐ Not Provided

NOTE: P = Pass F = Fail NA = Not Applicable NR = Not Requested
NT = Not Tested

4. 16 CFR Part 1213 Safety Standard For Entrapment Hazards In Bunk Beds

Clause	Requirements	Rating	Notes
1213.3	**Requirements**	--	--
1213.3(a)	Guardrails	--	--
	Any bunk bed shall provide at least two guardrails, at least one on each side of the bed, for each bed having the underside of its foundation more than 30 inches (760 mm) from the floor.	P	
	One guardrail shall be continuous between each of the bed's end structures. "Continuous" means that any gap between the guardrail and end structure shall not exceed 0.22 inches (5.6mm) (so as to not cause a finger entrapment hazard for a child).	P	
	The other guardrail may terminate before reaching the bed's end structures, providing there is no more than 15 inches (380mm) between either end of the guardrail and the nearest bed end structures.	P	
	For bunk beds designed to have a ladder attached to one side of the bed, the continuous guardrail shall be on the other side of the bed.	P	
	Guardrails shall be attached so that they cannot be removed without either intentionally releasing a fastening device or applying forces sequentially in different directions.	P	
	The upper edge of the guardrails shall be no less than 5 inches (130 mm) above the top surface of the mattress when a mattress of the maximum thickness specified by the bed manufacturer's instructions is on the bed. *This requirement does not prohibit a wall-side guardrail that terminates in a quarter-circle bend and attaches to the side rail of the upper bunk foundation.*	P	
	With no mattress on the bed, there shall be no openings in the structure between the lower edge of the uppermost member of the guardrail and the underside of the upper bunk's foundation that would permit passage of the wedge block of this part when tested in accordance with the procedure at §1213.4(a).	P	
1213.3(b)	*Bed end structures.*	--	--
	The upper edge of the upper bunk end structures shall be at least 5 inches (130 mm) above the top surface of the mattress for at least 50 percent of the distance between the two posts at the head and foot of the upper bunk when a mattress and foundation of the maximum thickness specified by the manufacturer's instructions is on the bed.	P	
	With no mattress on the bed, there shall be no openings in the end structures above the foundation of the upper bunk that will permit the free passage of the wedge block when tested in accordance with the procedure at § 1213.4(b).	P	
	When tested in accordance with § 1213.4(c), there shall be no openings in the end structures between the underside of the foundation of the upper bunk and upper side of the foundation of the lower bunk that will permit the free passage of the wedge block, unless the openings are also large enough to permit the free passage of a 9 inch (230 mm) diameter rigid sphere.	P	
	All portions of the boundary of any opening required by §§ 1213.4(c)(1) and (2) to be probed by the wedge block, and that permits free passage of a 9-inch diameter sphere, must conform to the neck entrapment requirements of § 1213.4(c)(3).	P	
1213.5	**Marking and labeling.**	--	--
1213.5(a)	There shall be a permanent label or marking on each bed stating the name and address (city, state, and zip code) of the manufacturer, distributor, or retailer; the model number; and the month and year of manufacture.	P	

Clause	Requirements	Rating	Notes
1213.5(b)	The following warning label shall be permanently attached to the inside of an upper bunk bed end structure in a location that cannot be covered by the bedding but that may be covered by the placement of a pillow. ⚠ **WARNING** To help prevent serious or fatal injuries from entrapment or falls: • Never allow a child under 6 years on upper bunk • Use only a mattress that is __ inches long and __ inches wide on upper bunk • Ensure thickness of mattress and foundation combined does not exceed __ inches and that mattress surface is at least 5 inches below upper edge of guardrails DO NOT REMOVE THIS LABEL	P	
1213.6	**Instructions.** Instructions shall accompany each bunk bed set, and shall include the following information.	--	--
1213.6(a)	*Size of mattress and foundation.* The length and width of the intended mattress and foundation shall be clearly stated, either numerically or in conventional terms such as twin size, twin extra-long, etc. In addition, the maximum thickness of the mattress and foundation required for compliance with § 1213.3(a)(5) and (b)(1) shall be stated.	P	
1213.6(b)	*Safety warnings* The instructions shall provide the following safety warnings:	P	
	Do not allow children under 6 years of age to use the upper bunk.	P	
	Use guardrails on both sides of the upper bunk.	P	
	Prohibit horseplay on or under beds.	P	
	Prohibit more than one person on upper bunk.	P	
	Use ladder for entering or leaving upper bunk.	P	
	If the bunk bed will be placed next to a wall, the guardrail that runs the full length of the bed should be placed against the wall to prevent entrapment between the bed and the wall. *This applies only to bunk beds without two full-length guardrails.*	P	

NOTE: P = Pass F = Fail NA = Not Applicable NR = Not Requested
NT = Not Tested

5. 16 CFR Part 1513 Requirements For Bunk Beds

Clause	Requirement	Rating	Notes
1513.3 Requirements.			
(a) ***Guardrails.***			
(1)	Any bunk bed shall provide at least two guardrails, at least one on each side of the bed, for each bed having the underside of its foundation more than 30 inches (760 mm) from the floor.	P	
(2)	One guardrail shall be continuous between each of the bed's end structures. "Continuous" means that any gap between the guardrail and end structure shall not exceed 0.22 inches (5.6 mm) (so as to not cause a finger entrapment hazard for a child).	P	
(3)	The other guardrail may terminate before reaching the bed's end structures, providing there is no more than 15 inches (380 mm) between either end of the guardrail and the nearest bed end structure.	P	
(4)	For bunk beds designed to have a ladder attached to one side of the bed, the continuous guardrail shall be on the other side of the bed.	P	
(5)	Guardrails shall be attached so that they cannot be removed without either intentionally releasing a fastening device or applying forces sequentially in different directions.	P	
(6)	The upper edge of the guardrails shall be no less than 5 inches (130 mm) above the top surface of the mattress when a mattress of the maximum thickness specified by the manufacturer's instructions is on the bed. This requirement does not prohibit a wall-side guardrail that terminates in a quartercircle bend and attaches to the side rail of the upper bunk foundation.	P	
(7)	With no mattress on the bed, there shall be no openings in the structure between the lower edge of the uppermost member of the guardrail and the underside of the upper bunk's foundation that would permit passage of the wedge block shown in Figure 1 of this part when tested in accordance with the procedure at § 1513.4(a).	P	
(b) ***Bed end structures.***			
(1)	The upper edge of the upper bunk end structures shall be at least 5 inches (130 mm) above the top surface of the mattress for at least 50 percent of the distance between the two posts at the head and foot of the upper bunk when a mattress and foundation of the maximum thickness specified by the manufacturer's instructions is on the bed.	P	
(2)	With no mattress on the bed, there shall be no openings in the rigid end structures above the foundation of the upper bunk that will permit the free passage of the wedge block shown in Figure 1 when tested in accordance with the procedure at § 1513.4(b).	P	
(3)	When tested in accordance with § 1513.4(c), there shall be no openings in the end structures between the underside of the foundation of the upper bunk and upper side of the foundation of the lower bunk that will permit the free passage of the wedge block shown in Figure 1, unless the openings arealso large enough to permit the free passage of a 9-inch (230-mm) diameter rigid sphere.	P	
(4)	All portions of the boundary of any opening required by §§ 1513.4(c)(1) and (2) to be probed by the wedge block of Figure 1, and that permits free passage of a 9-inch diameter sphere, must conform to the neck entrapment requirements of § 1513.4(c)(3).	P	
1513.5 Marking and labeling			
(a)	There shall be a permanent label or marking on each bed stating the name and address (city, state, and zip code) of the manufacturer, distributor, or retailer; the model number; and the month and year of manufacture.	P	

Clause	Requirement	Rating	Notes
(b)	The following warning label shall be permanently attached to the inside of an upper bunk bed end structure in a location that cannot be covered by the bedding but that may be covered by the placement of a pillow. ⚠ **WARNING** To help prevent serious or fatal injuries from entrapment or falls: • Never allow a child under 6 years on upper bunk • Use only a mattress that is __ inches long and __ inches wide on upper bunk • Ensure thickness of mattress and foundation combined does not exceed __ inches and that mattress surface is at least 5 inches below upper edge of guardrails DO NOT REMOVE THIS LABEL	P	
1513.6 Instructions	Instructions shall accompany each bunk bed set, and shall include the following information.		
(a)	*Size of mattress and foundation.* The length and width of the intended mattress and foundation shall be clearly stated, either numerically or in conventional terms such as twin size, twin extra-long, etc. In addition, the maximum thickness of the mattress and foundation required for compliance with § 1513.3 (a)(5) and (b)(1) of this part shall be stated.	P	
(b)	*Safety warnings.* The instructions shall provide the following safety warnings:	--	--
(1)	Do not allow children under 6 years of age to use the upper bunk.	P	
(2)	Use guardrails on both sides of the upper bunk.	P	
(3)	Prohibit horseplay on or under beds.	P	
(4)	Prohibit more than one person on upper bunk.	P	
(5)	Use ladder for entering or leaving upper bunk.	P	
(6)	If the bunk bed will be placed next to a wall, the guardrail that runs the full length of the bed should be placed against the wall to prevent entrapment between the bed and the wall. (This applies only to bunk beds without two full-length guardrails.)	P	

NOTE: P = Pass F = Fail NA = Not Applicable NR = Not Requested
NT = Not Tested

6. Sharp Point, Sharp Edges

Test method	Test requirement	Result
Hazardous sharp edges (16 CFR 1500.49)	There shall be no hazardous sharp edges as defined by 16 CFR 1500.49 before or after testing to this specification	PASS
Hazardous sharp point (16 CFR 1500.48)	There shall be no hazardous sharp points as defined by 16 CFR 1500.48 before or after testing to this specification	PASS

EXHIBIT(S):

Exhibit. 1

Exhibit. 2

Exhibit. 3

Exhibit. 4

Exhibit. 5

Exhibit. 6

Exhibit. 7

Exhibit. 8

Exhibit. 9

Exhibit. 10

Exhibit. 11

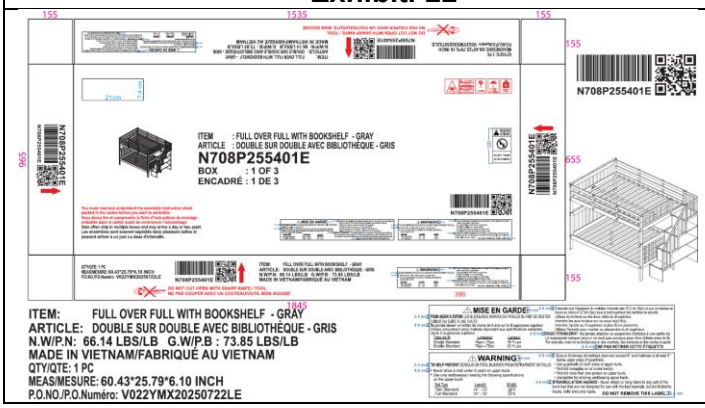

Exhibit. 12

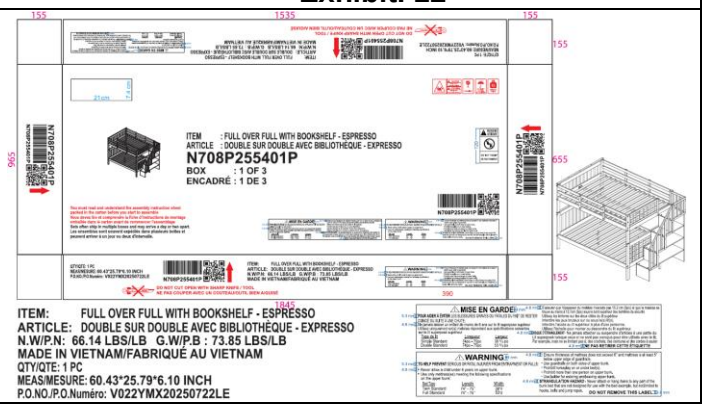

Exhibit. 13

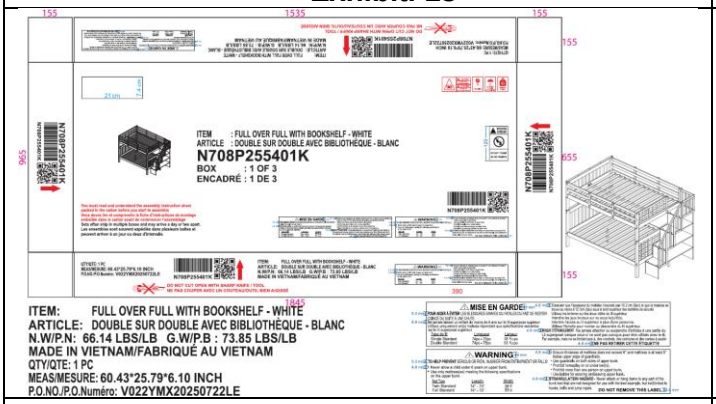

Exhibit. 14

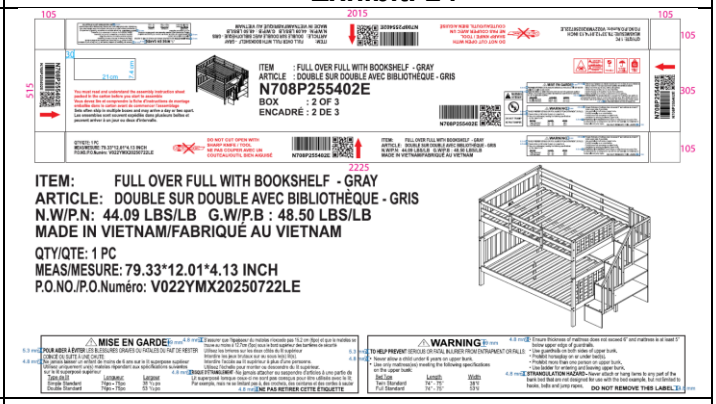

Exhibit. 15

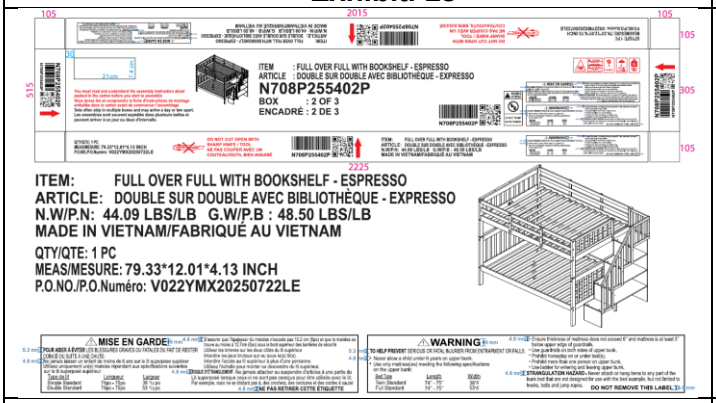

Exhibit. 16

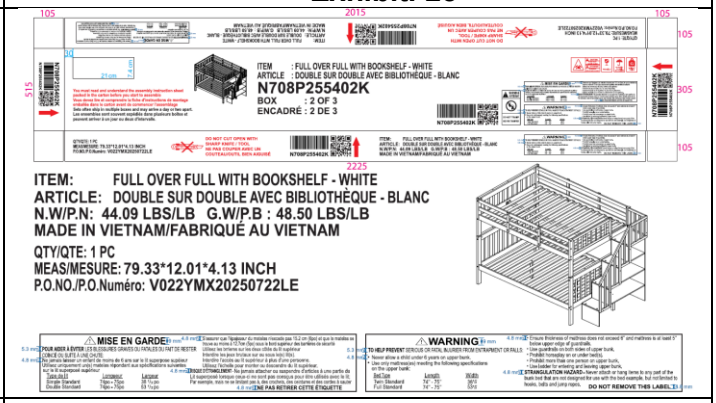

Exhibit. 17

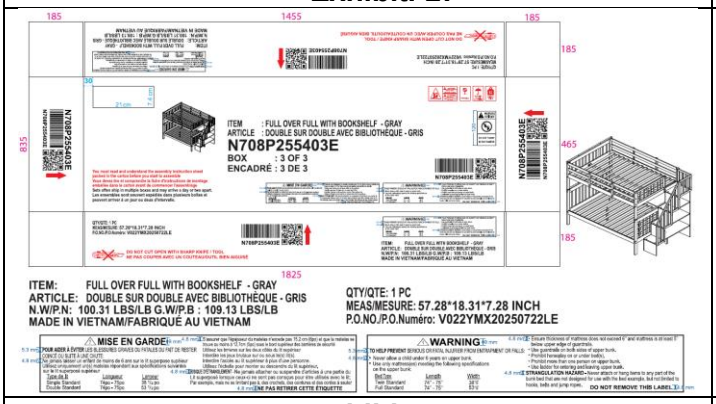

Exhibit. 18

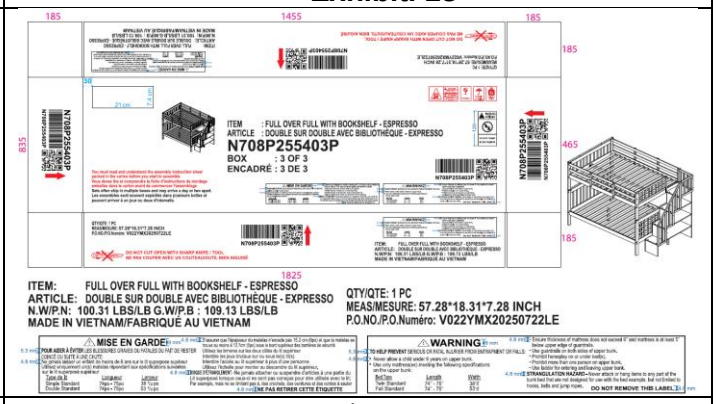

Exhibit. 19

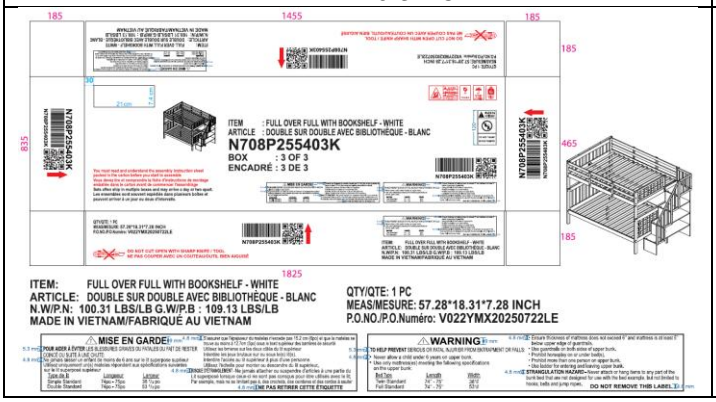

/

/

NOTE:

The test results are considered as conform to specification based on the general consideration simple acceptance as stated in ISO/IEC GUIDE 98-4:2012.

If there is question or concern regarding the above results, please contact the appropriate lab person below:

Technical questions:

Primary Contact: Allen Hsu	Tel: +84-28-6289-6363 Ext: 127	Email: Allen.Hsu@cpt.eurofinsasia.com
Back-up Contact: Harry Vu	Tel: +84-28-6289-6363 Ext: 175	Email: Harry.Vu@cpt.eurofinsasia.com

Concerns About Billing and General Inquiries:

Primary Contact: Vincent Pham	Tel: +84-28-6289-6363 Ext: 114	Email: Vincent.Pham@cpt.eurofinsasia.com
Back-up Contact: Wendy Do	Tel: +84-28-6289-6363 Ext: 123	Email: Wendy.Do@cpt.eurofinsasia.com

This test report is governed by the Terms and Conditions, available on request or attached to the end of this test report. Attention is especially drawn to the limitations of liability, indemnification and jurisdictional provisions defined therein. This report is issued strictly based on the testing of the samples submitted by you. The test results in this report refer only to the sample(s) actually tested and do not refer or be deemed to refer to any bulk production from which such sample(s) may be said to have been obtained. In the event that Eurofins MTS Consumer Product Testing (Vietnam) Co. Ltd ("ERF") was requested to survey and test any bulk production quantity of samples, ERF, in the absence of any contrary written instructions, performed random sampling of bulk production for testing purposes. Variations in the conditions under which samples are stored, transported, etc., may lead to variations in the test results. ERF cannot anticipate and shall not be held responsible for variations in test results that may be due to factors beyond ERF' control, such as, sample cross-contamination, evaporation of volatile substances due to storage temperature, humidity, etc. This report does not constitute a recommendation, actual or implied, for any specific course of action. Other than the expressed warranties made in the Terms and Conditions of the ERF Test Request Form, ERF makes no warranties or representations either express or implied with respect to this report. In no circumstances whatsoever shall ERF be liable for any consequential, special or incidental damages arising out of, or in connection with, this report.