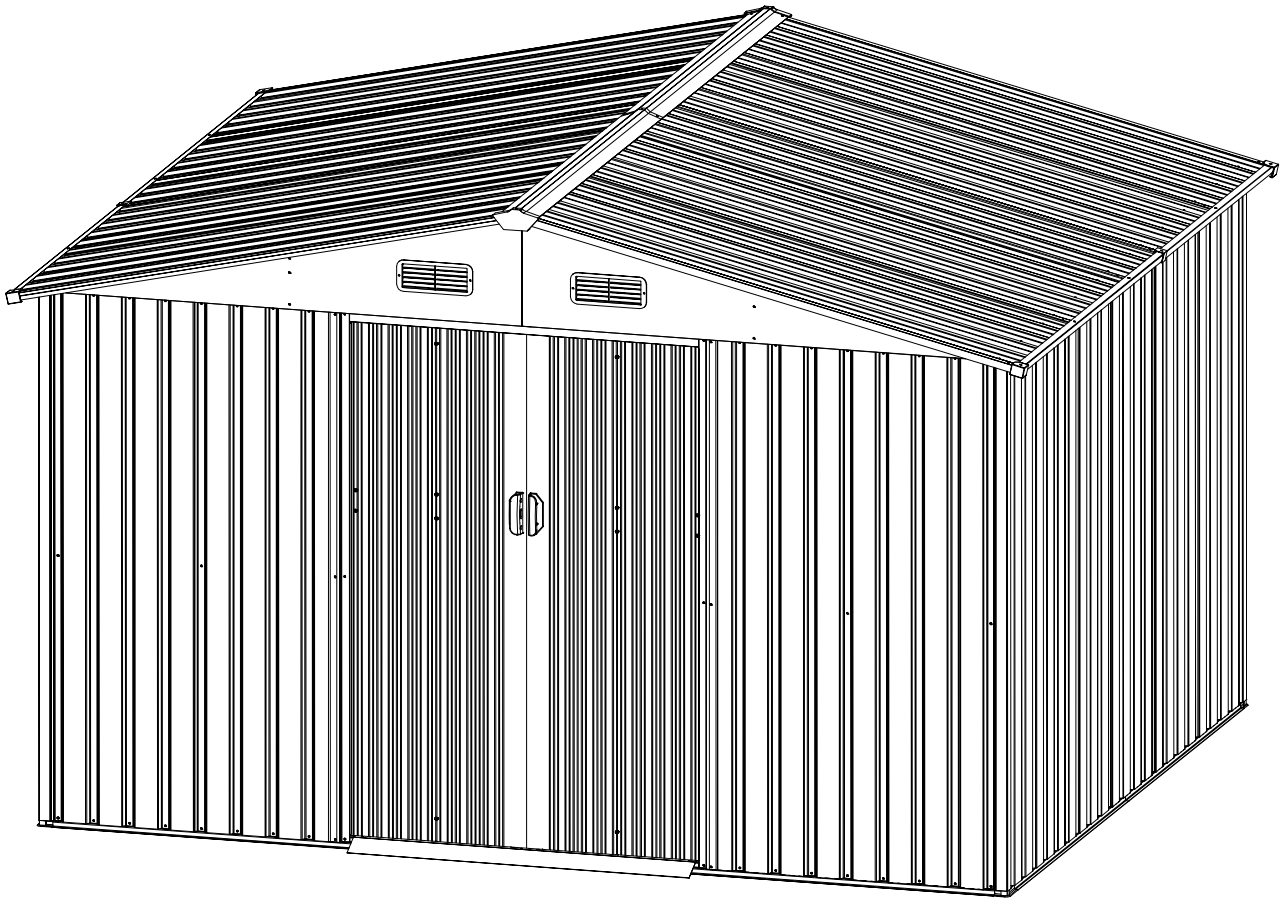

| NO. | PART. | Qty. |
|---|---|---|
| 1L | 1403.6mm | 1 |
| 1R | 1403.6mm | 1 |
| 2LF | 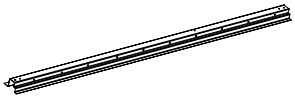 1093.3mm | 1 |
| 2LB | 1136.1mm | 1 |
| 2RF | 1093.3mm | 1 |
| 2RB | 1136.1mm | 1 |
| 3L | 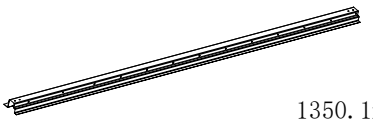 1350.1mm | 1 |
| 3R | 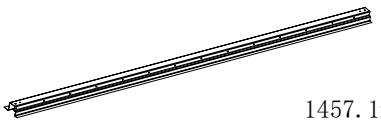 1457.1mm | 1 |
| 4F | 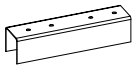 120mm | 2 |
| 4B | 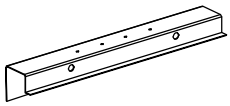 200mm | 3 |
| 5 | 1510mm | 4 |
| 6L | 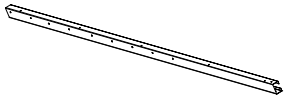 1410.2mm | 1 |
| 6R | 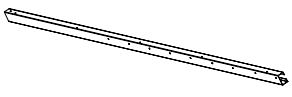 1410.2mm | 1 |
| 7F | 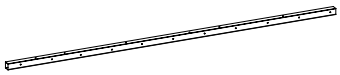 1139.2mm | 2 |

| NO. | PART. | Qty. |
|---|---|---|
| 7B | 1139.2mm | 2 |
| 8L | 1406.7mm | 1 |
| 8R | 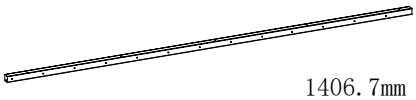 1406.7mm | 1 |
| 9 | 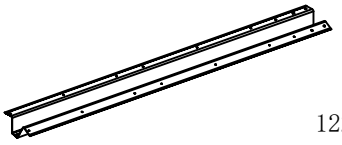 1226mm | 2 |
| 10 | 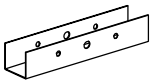 100mm | 3 |
| 10F | 405mm | 1 |
| 10B | 405mm | 1 |
| 11L | 320mm | 2 |
| 11R | 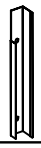 320mm | 2 |
| 12 | 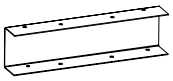 120mm | 1 |
| 15 | 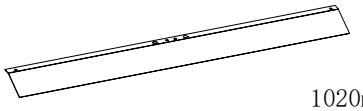 1020mm | 1 |
| 17L | 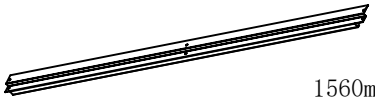 1560mm | 1 |
| 17R | 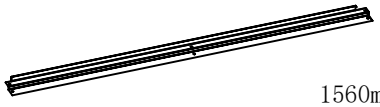 1560mm | 1 |
| 18 | 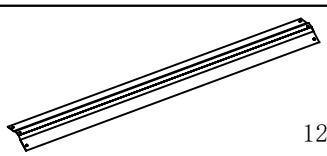 1250.5mm | 2 |

| NO. | PART. | Qty. |
|---|---|---|
| 19L | 1072mm | 2 |
| 19R | 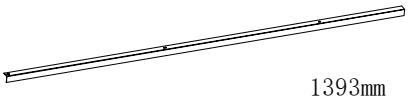 1393mm | 2 |
| 20 | 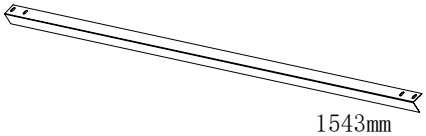 1543mm | 4 |
| 21L | 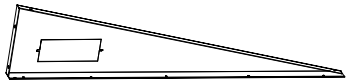 | 2 |
| 21R | 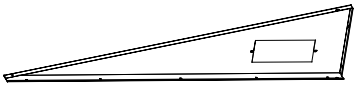 | 2 |
| 22 | 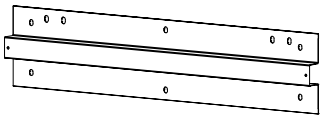 532mm | 6 |
| 23 | 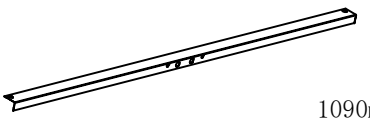 1090mm | 1 |
| 25 | 1236mm | 2 |
| 26 | 1236mm | 2 |
| 27 | 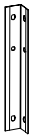 165mm | 4 |
| W3 | 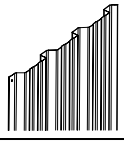  1560mm | 4 |
| W5 | 1560mm | 13 |
| W6 | 1560mm | 2 |
| W7 | 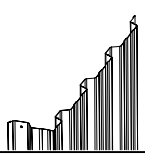 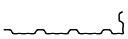 1560mm | 4 |

| NO. | PART. | Qty. |
|---|---|---|
| W12 | 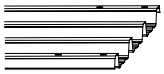  1535mm | 2 |
| W15 | 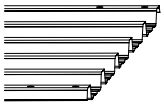  1535mm | 8 |
| M1 | 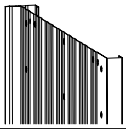  1560mm | 1 |
| M2 | 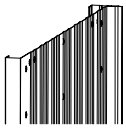  1560mm | 1 |
| A | 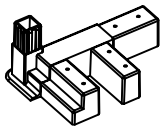 | 1 |
| B | 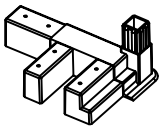 | 1 |
| C | 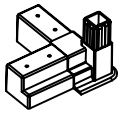 | 2 |
| D | | 1 |
| E | | 1 |
| F | | 2 |
| I | 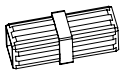 | 3 |
| F1 | 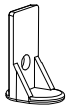 | 4 |
| F2 | 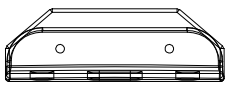 | 2 |
| F3 | 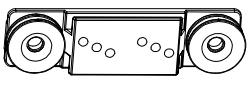 | 4 |

| NO. | PART. | Qty. |
|---|---|---|
| F4 | | 4 |
| F5 | 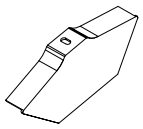 | 2 |
| F6 | | 4 |
| F7 | | 364 |
| F8 | 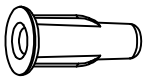 | 52 |
| F9 | | 2 |
| F10 | 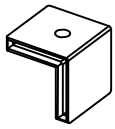 | 2 |
| S4 | 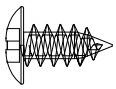 | 380 |
| S6 | 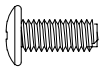 | 106 |
| S7 | | 106 |
| S8 | 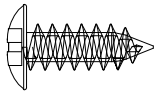 | 12 |
| S9 | | 4 |
| S12 | 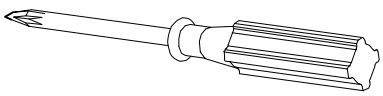 | 1 |
| S15 | 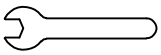 | 1 |

| NO. | PART. | Qty. |
|---|---|---|
| | | |
| | | |
| | | |
| | | |
| | | |
| | | |
| | | |
| | | |
| | | |
| | | |
| | | |
| | | |
| | | |
| | | |

PART LIST

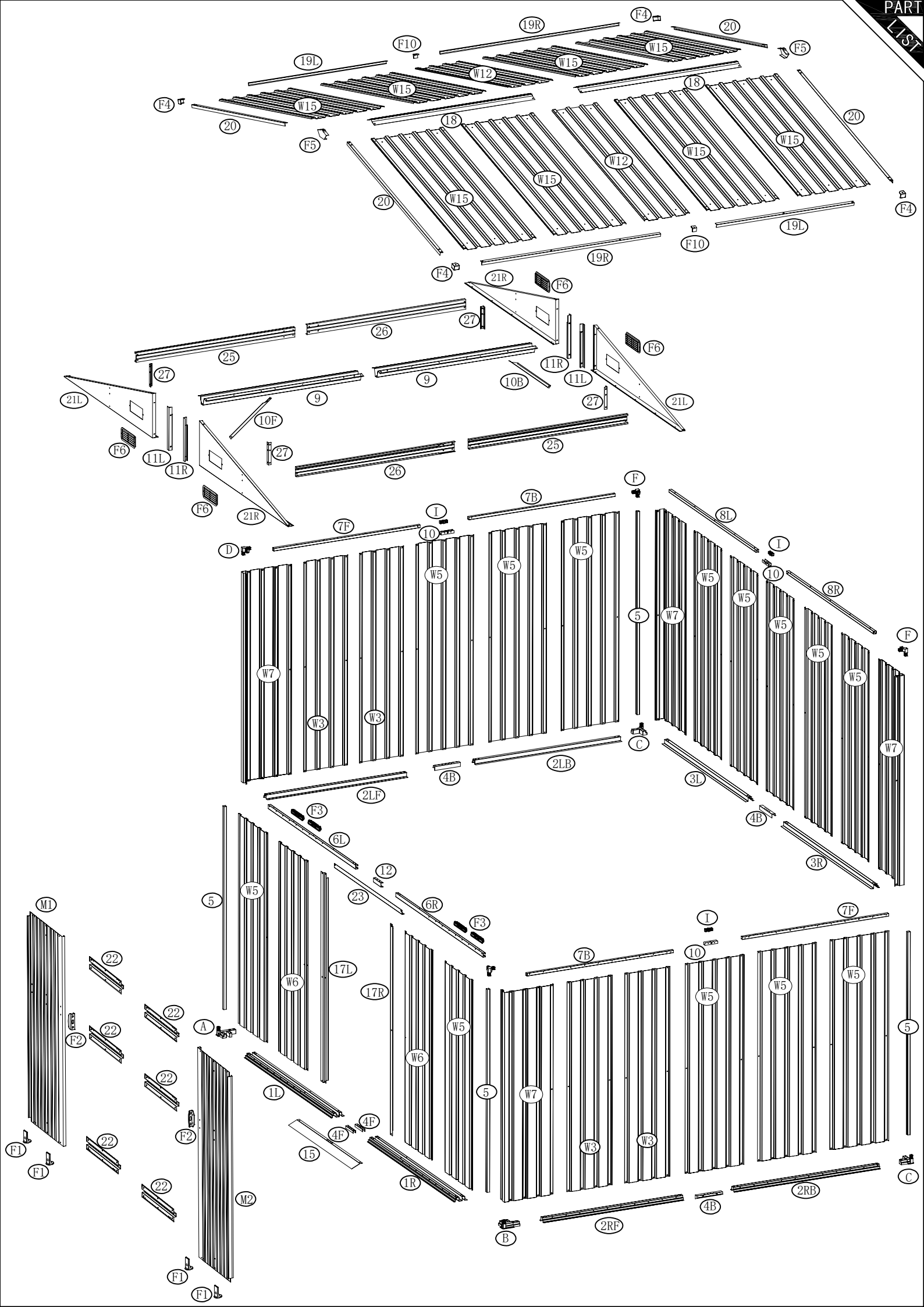

F4
19R
20
F10
W15
F5
19L
W12
W15
18
F4
W15
20
18
20
F5
W15
W12
W15
W15
20
W15
F4
19L
F10
19R
F4
21R
F6
27
26
25
F6
27
11R
11L
9
10B
21L
9
27
21L
10F
F6
11L
11R
27
25
26
F6
21R
F
7B
I
8L
7F
10
D
I
W5
W5
W5
10
8R
W5
W5
5
W7
W5
F
W5
W5
W7
W3
W3
C
W7
2LB
4B
3L
2LF
4B
F3
6L
3R
12
5
W5
23
6R
M1
F3
I
7F
22
7B
10
W6
17L
17R
W5
W5
W5
22
A
W5
5
F2
22
W6
22
1L
5
W7
4F
4F
F2
22
15
W3
W3
F1
F1
1R
C
22
M2
2RB
4B
2RF
B
F1
F1

| NO. | PART. | Qty. |
|---|---|---|
| 1L | 1403.6mm | 1 |
| 1R | 1403.6mm | 1 |
| 4F | 120mm | 2 |
| S4 | | 6 |

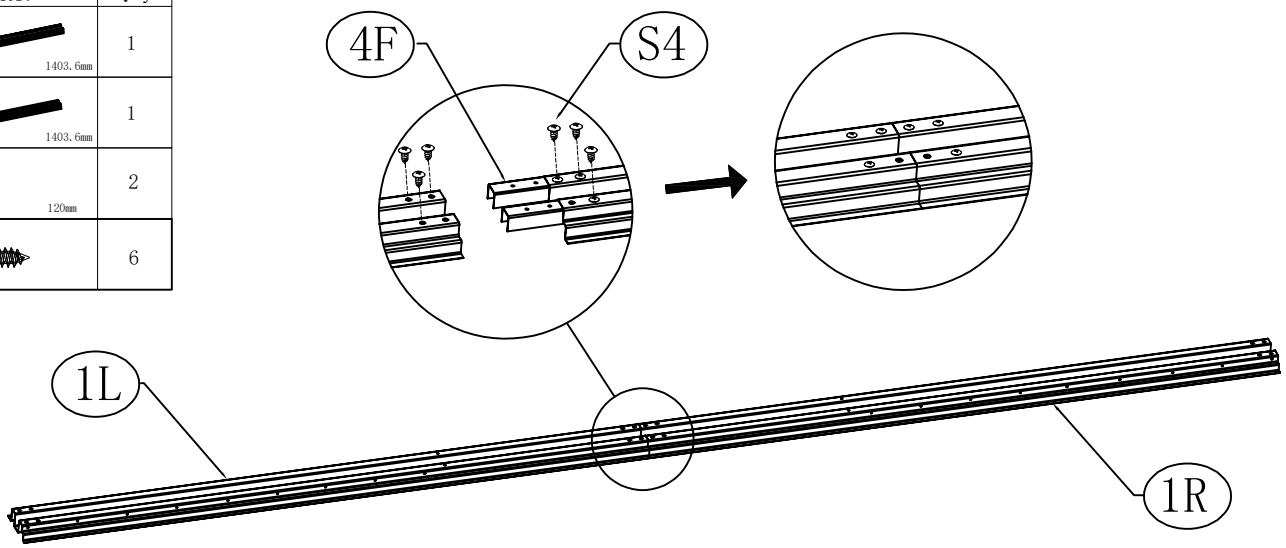


| NO. | PART. | Qty. |
|---|---|---|
| 15 |  1020mm | 1 |
| S4 |  | 4 |

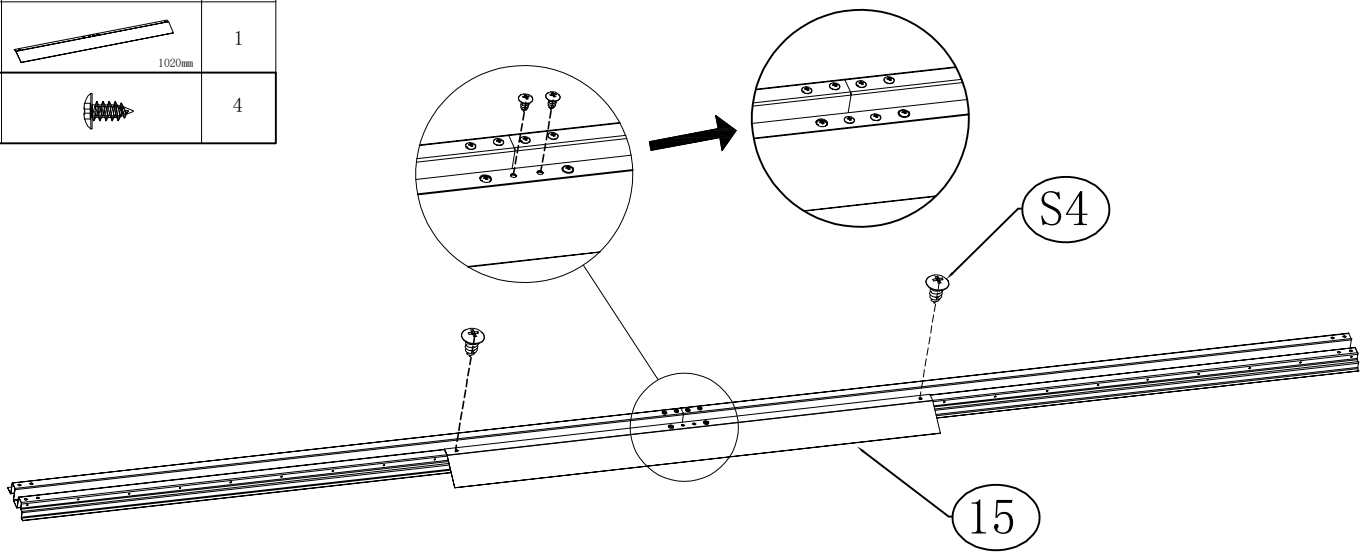


| NO. | PART. | Qty. |
|---|---|---|
| 2LF | 1093.3mm | 1 |
| 2LB | 1136.1mm | 1 |
| 4B | 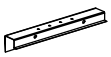 200mm | 1 |
| S4 |  | 4 |

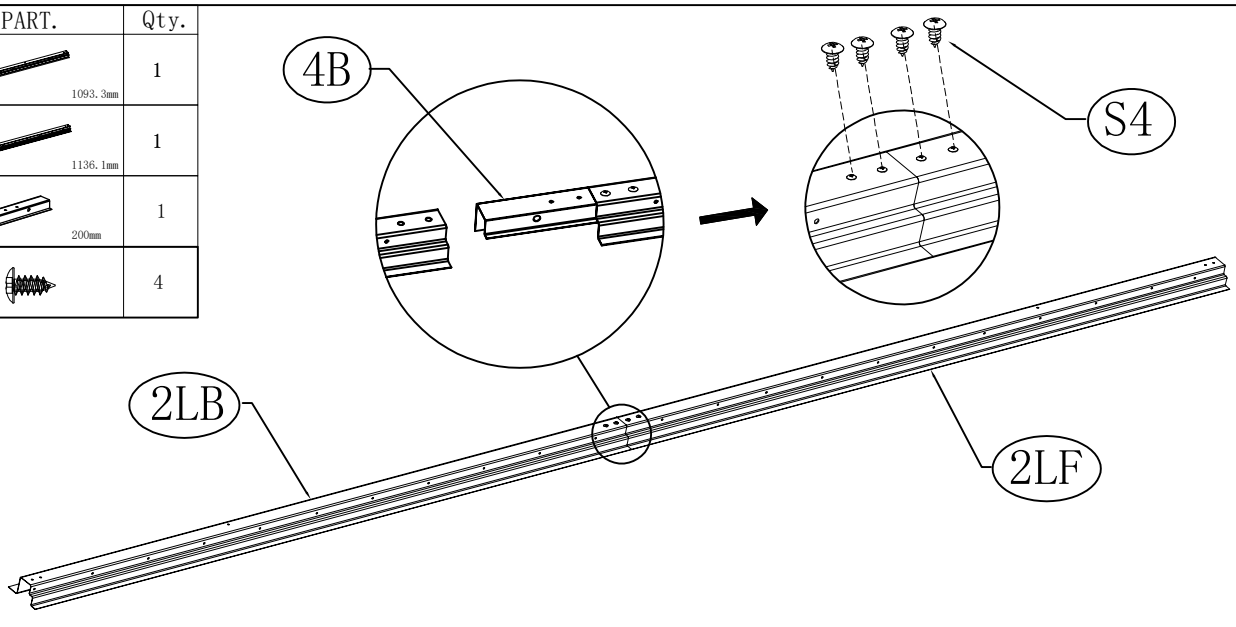

| NO. | PART. | Qty. |
|---|---|---|
| 2RF | 1093.3mm | 1 |
| 2RB | 1136.1mm | 1 |
| 4B |  200mm | 1 |
| S4 |  | 4 |

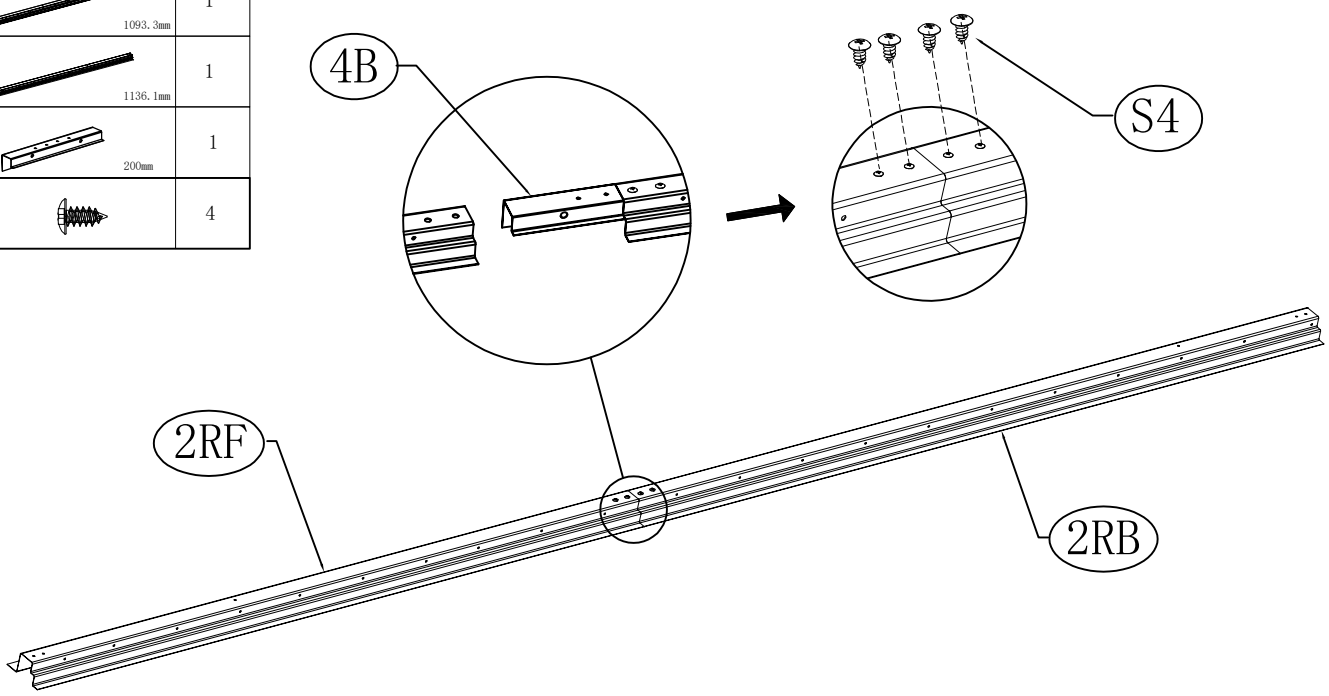


| NO. | PART. | Qty. |
|---|---|---|
| 3L | 1350.1mm | 1 |
| 3R | 1457.1mm | 1 |
| 4B |  120mm | 1 |
| S4 |  | 4 |

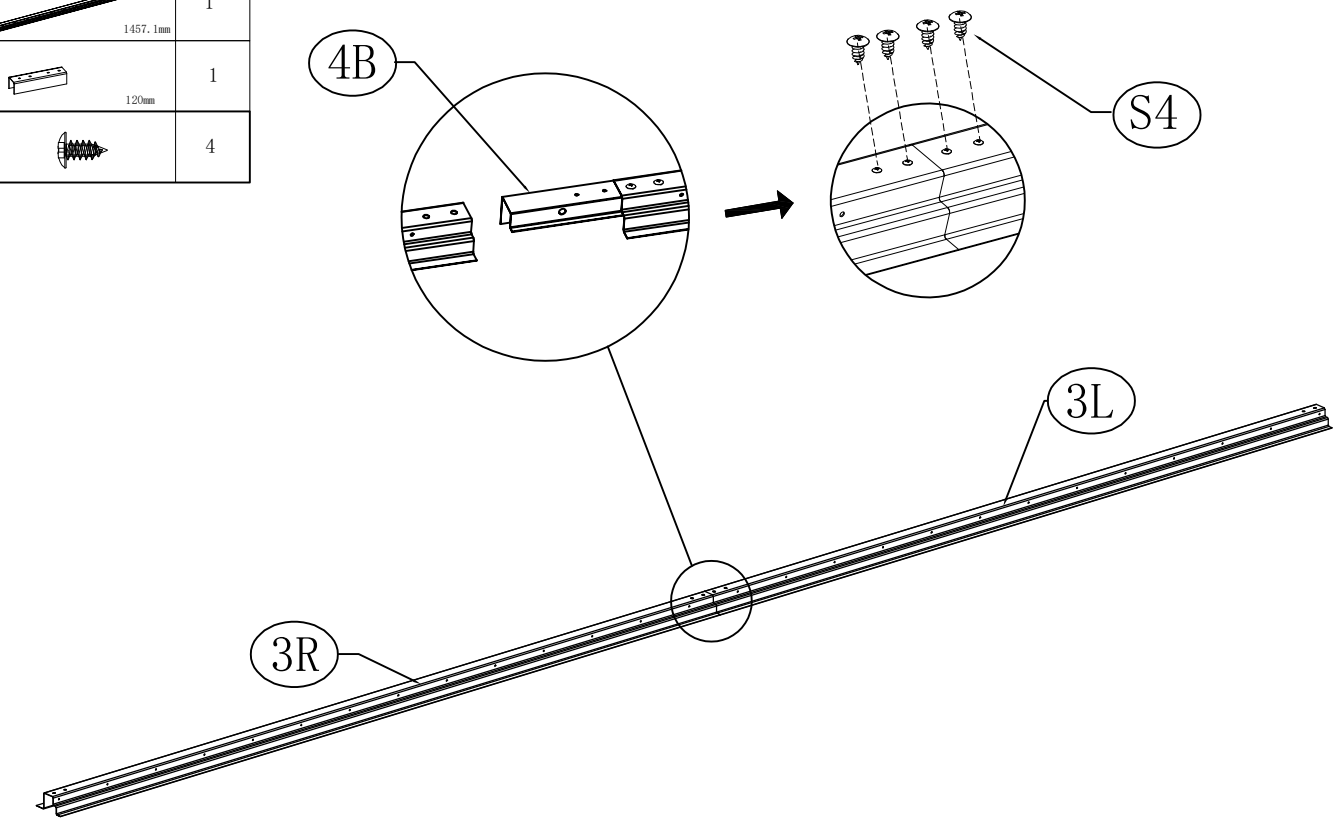

| NO. | PART. | Qty. |
|---|---|---|
| A |  | 1 |
| B |  | 1 |
| C |  | 2 |
| S4 |  | 20 |

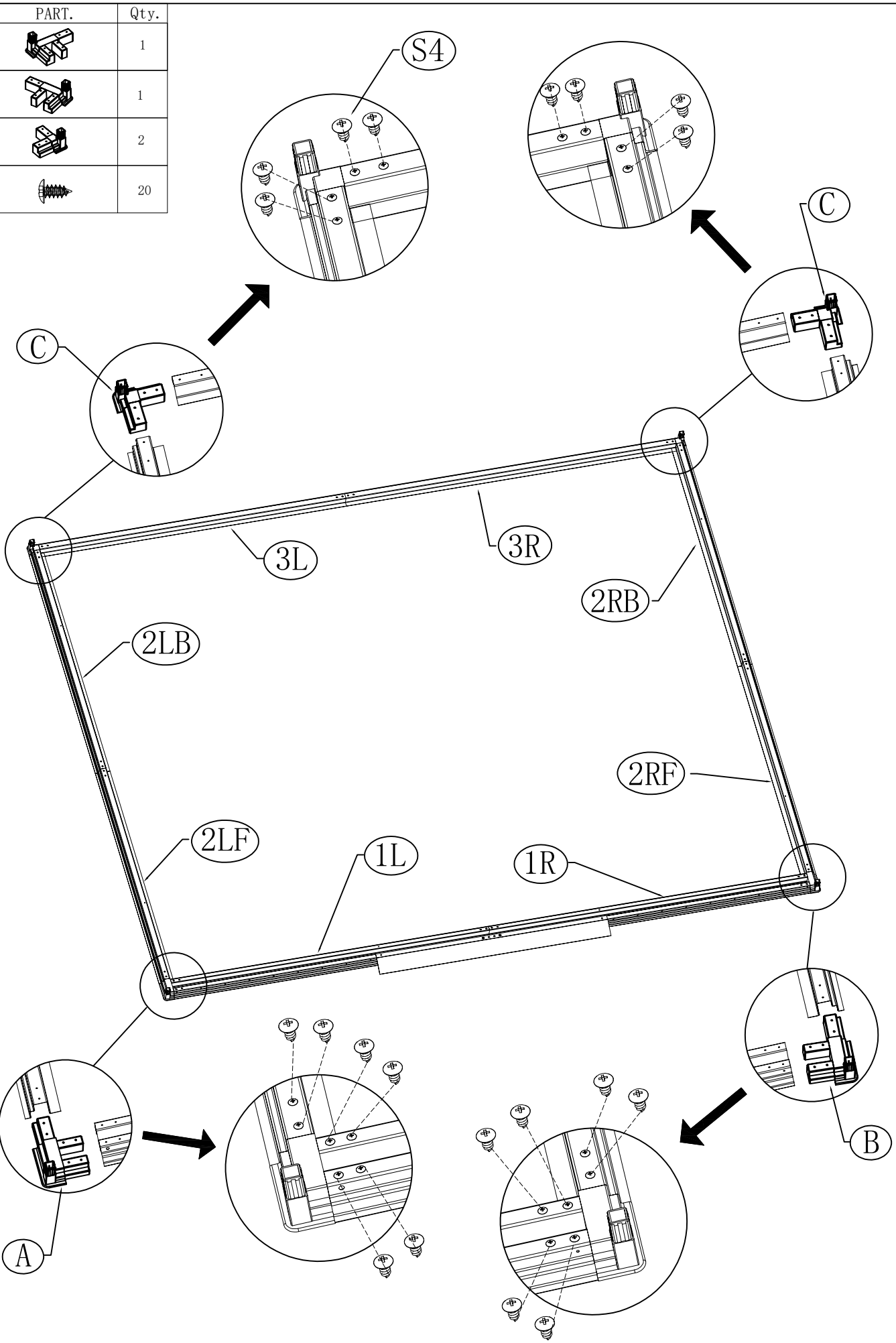

| NO. | PART. | Qty. |
|---|---|---|
| 5 | 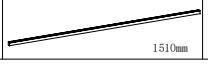 1510mm | 4 |

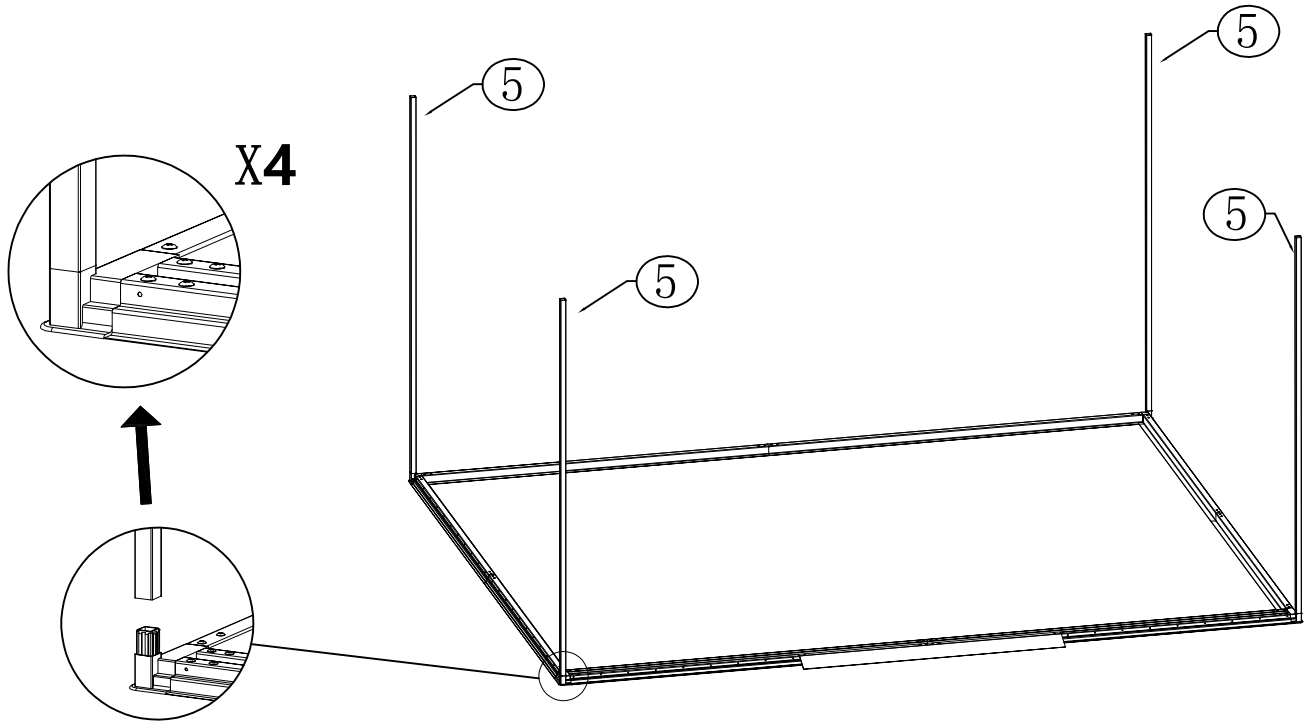


| NO. | PART. | Qty. |
|---|---|---|
| 6L | 1410.2mm | 1 |
| 6R | 1410.2mm | 1 |
| 12 | 120mm | 1 |
| F3 | 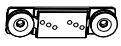 | 4 |
| S4 | | 2 |

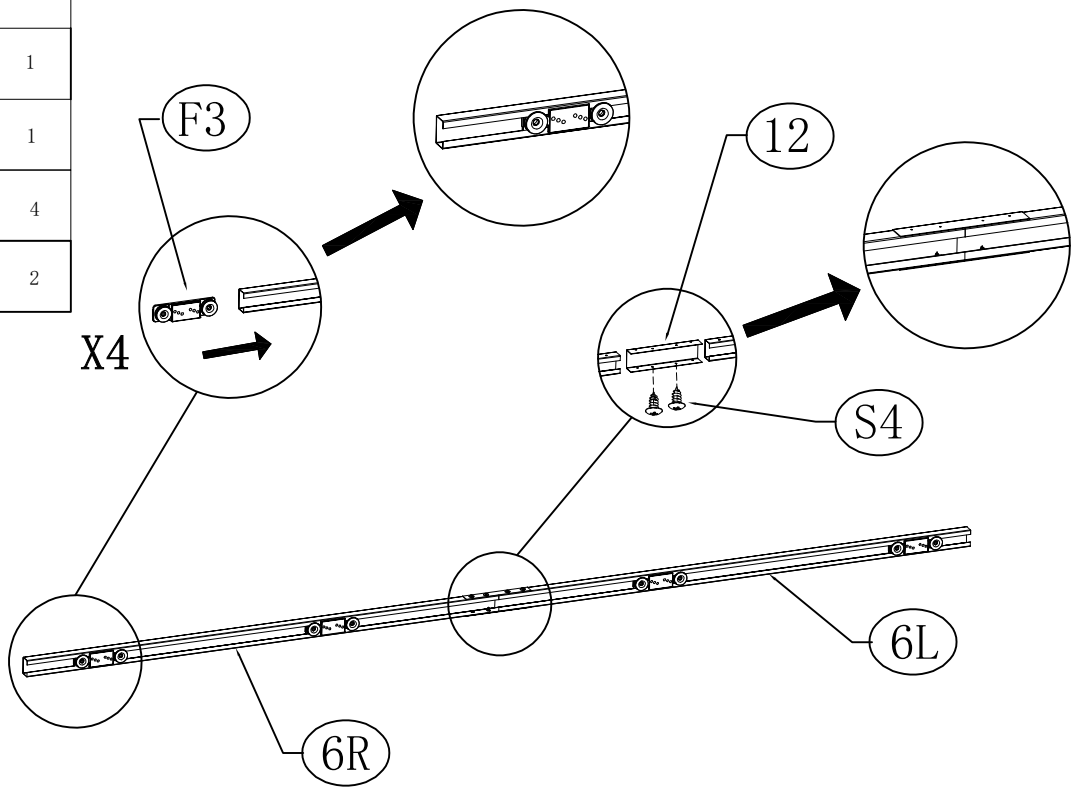

| NO. | PART. | Qty. |
|---|---|---|
| 7F | 1139.2mm | 2 |
| 7B | 1139.2mm | 2 |
| 10 | 100mm | 2 |
| I | | 2 |
| S4 | | 8 |

X2

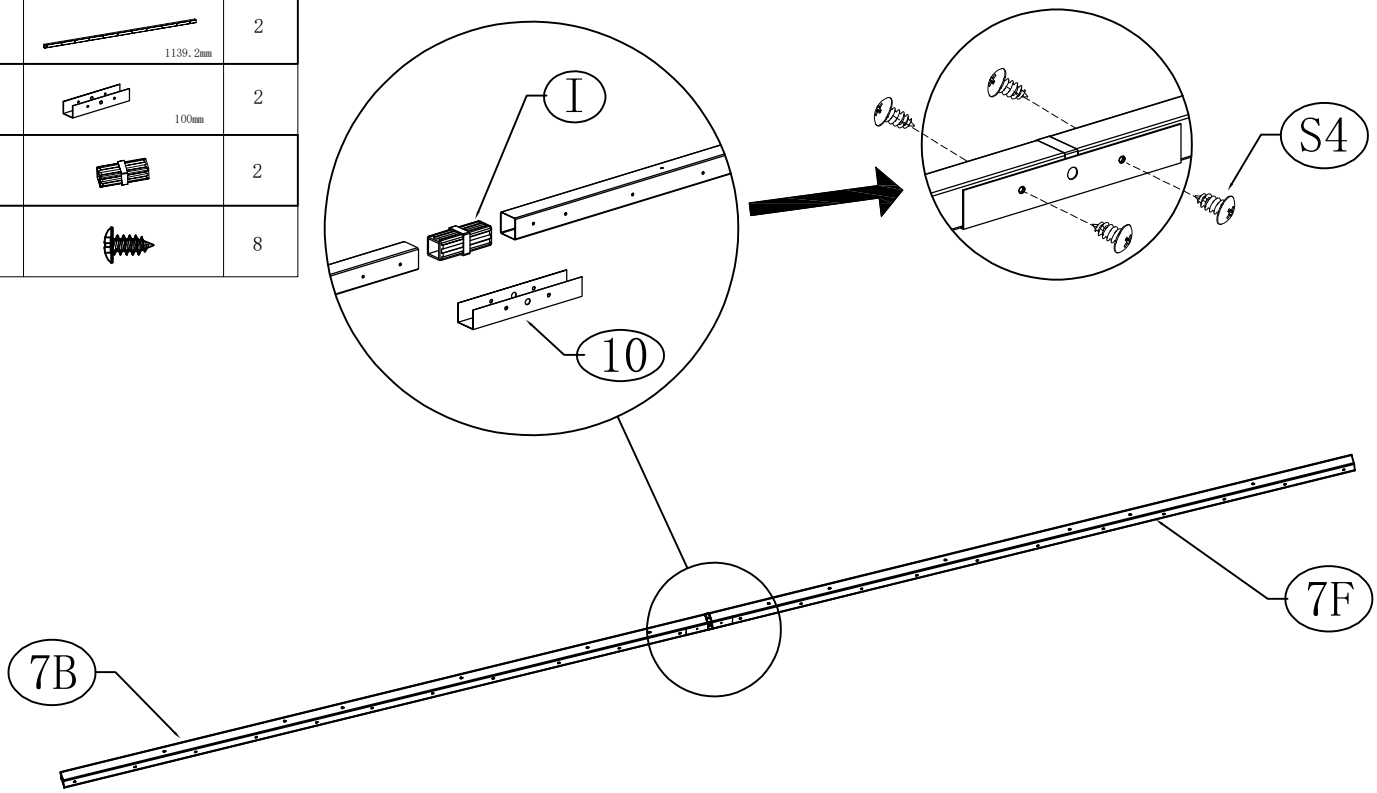


| NO. | PART. | Qty. |
|---|---|---|
| 8L | 1406.7mm | 1 |
| 8R | 1406.7mm | 1 |
| 10 | 100mm | 1 |
| I | | 1 |
| S4 | | 4 |

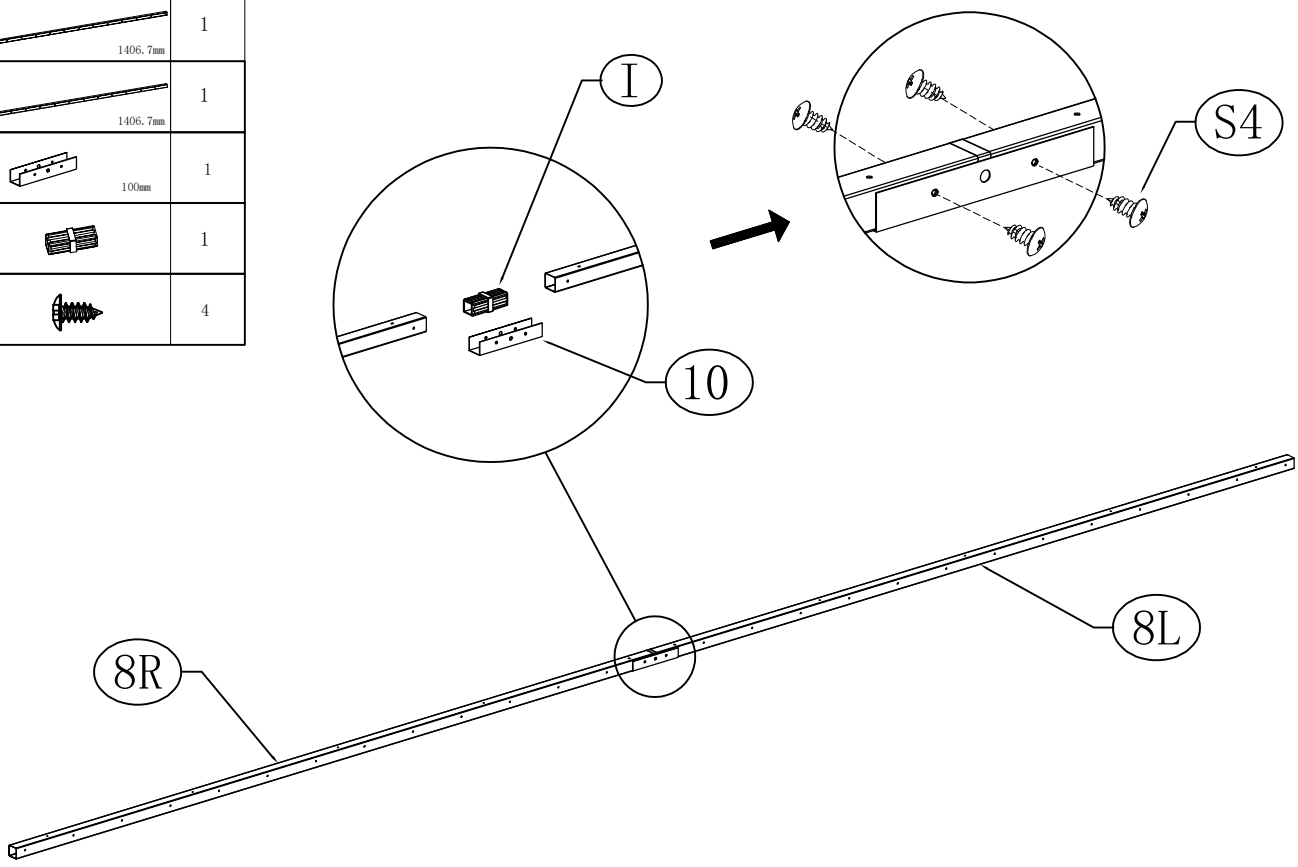

| NO. | PART. | Qty. |
|---|---|---|
| D | | 1 |
| E | | 1 |
| F |  | 2 |
| S4 |  | 6 |

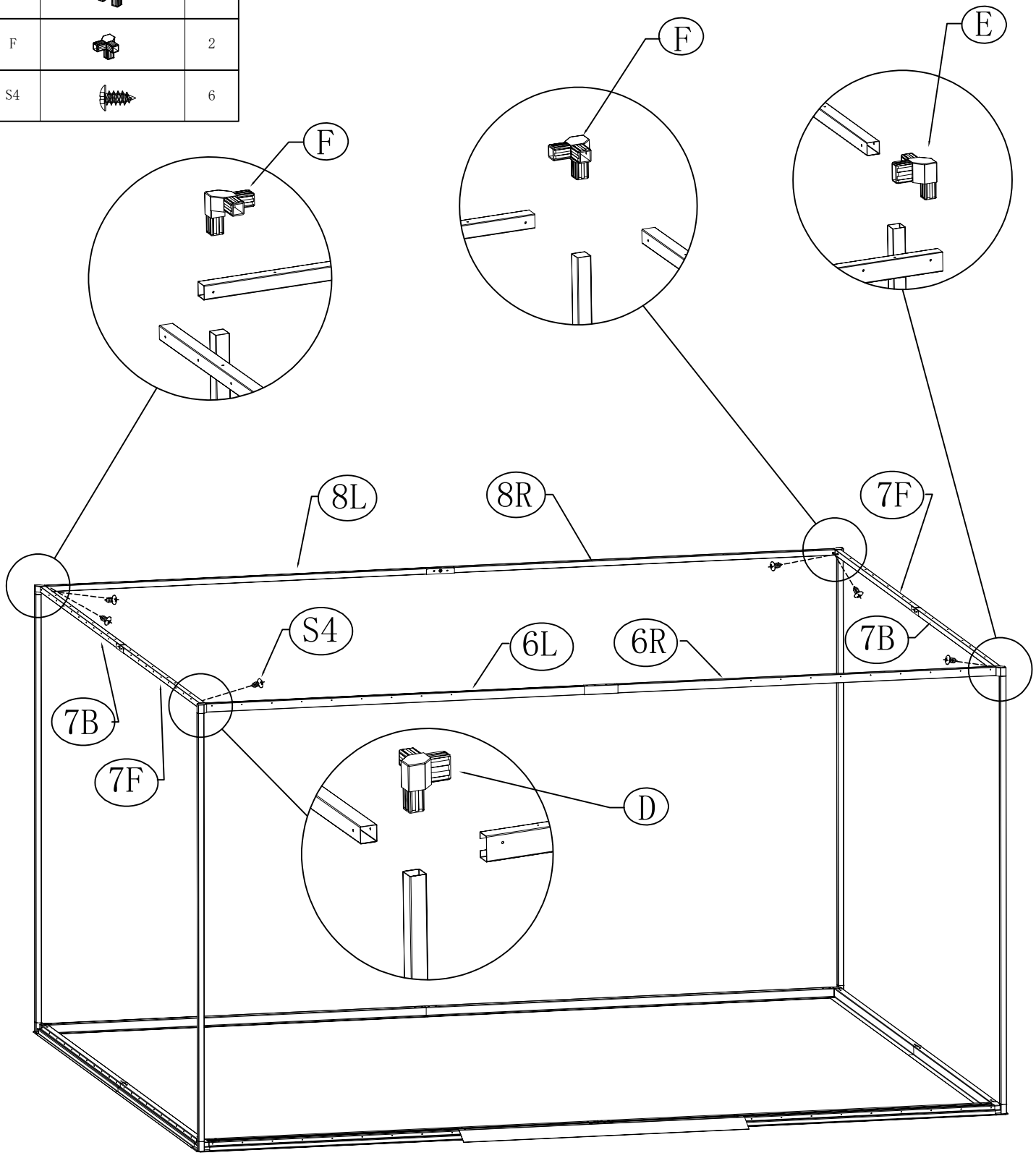

| NO. | PART. | Qty. |
|---|---|---|
| 23 | 1090mm | 1 |
| S4 | | 2 |

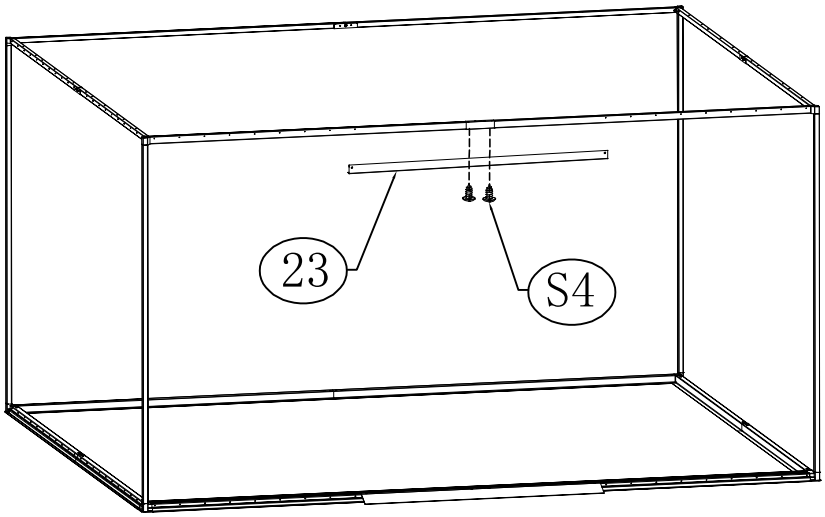


| NO. | PART. | Qty. |
|---|---|---|
| W7 | 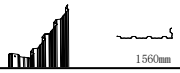 1560mm | 4 |
| S4 |  | 24 |
| F7 |  | 24 |

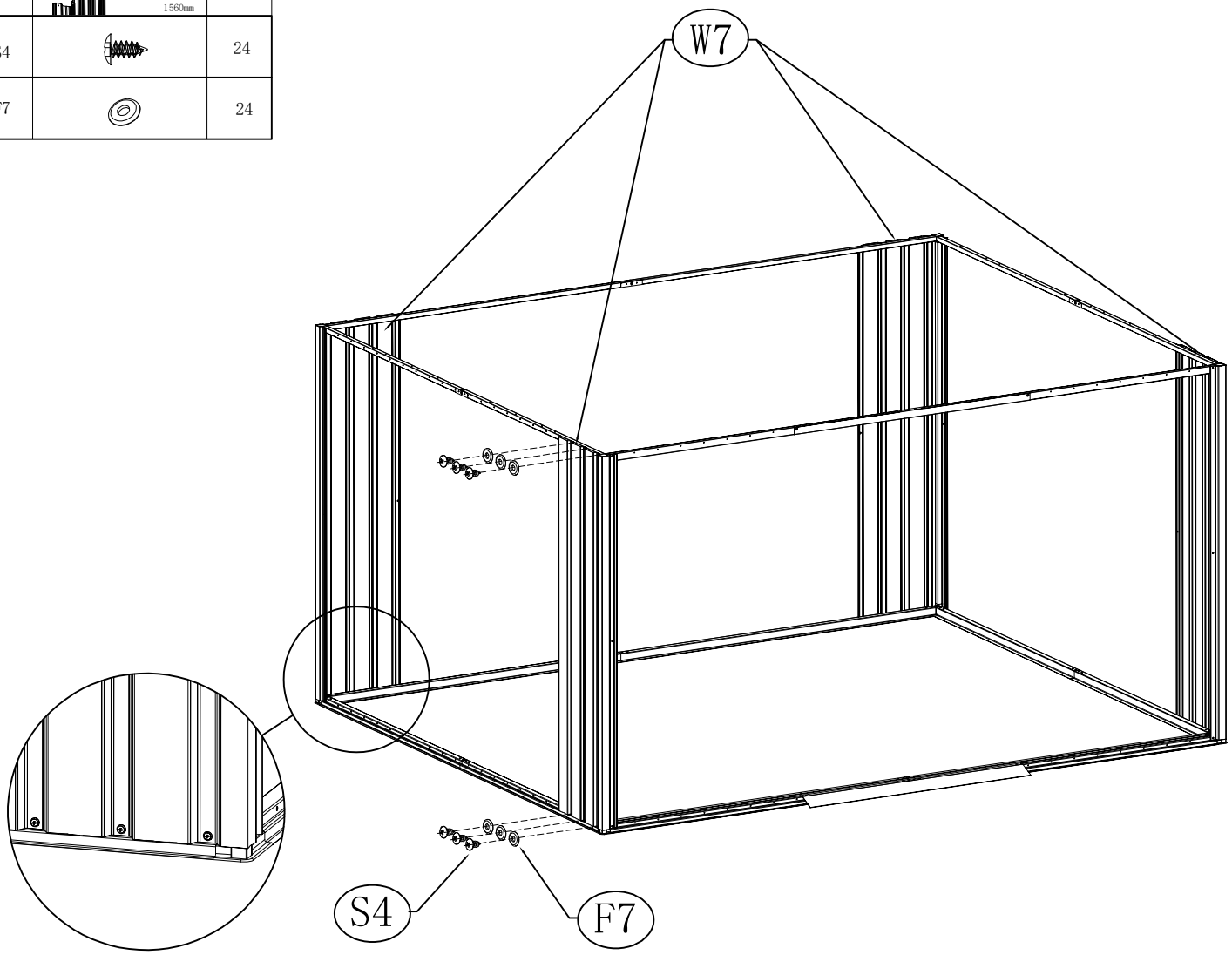

| NO. | PART. | Qty. |
|---|---|---|
| W5 | 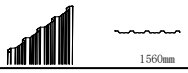  | 2 |
| S4 | | 16 |
| S6 |  | 2 |
| S7 |  | 2 |
| F7 |  | 18 |

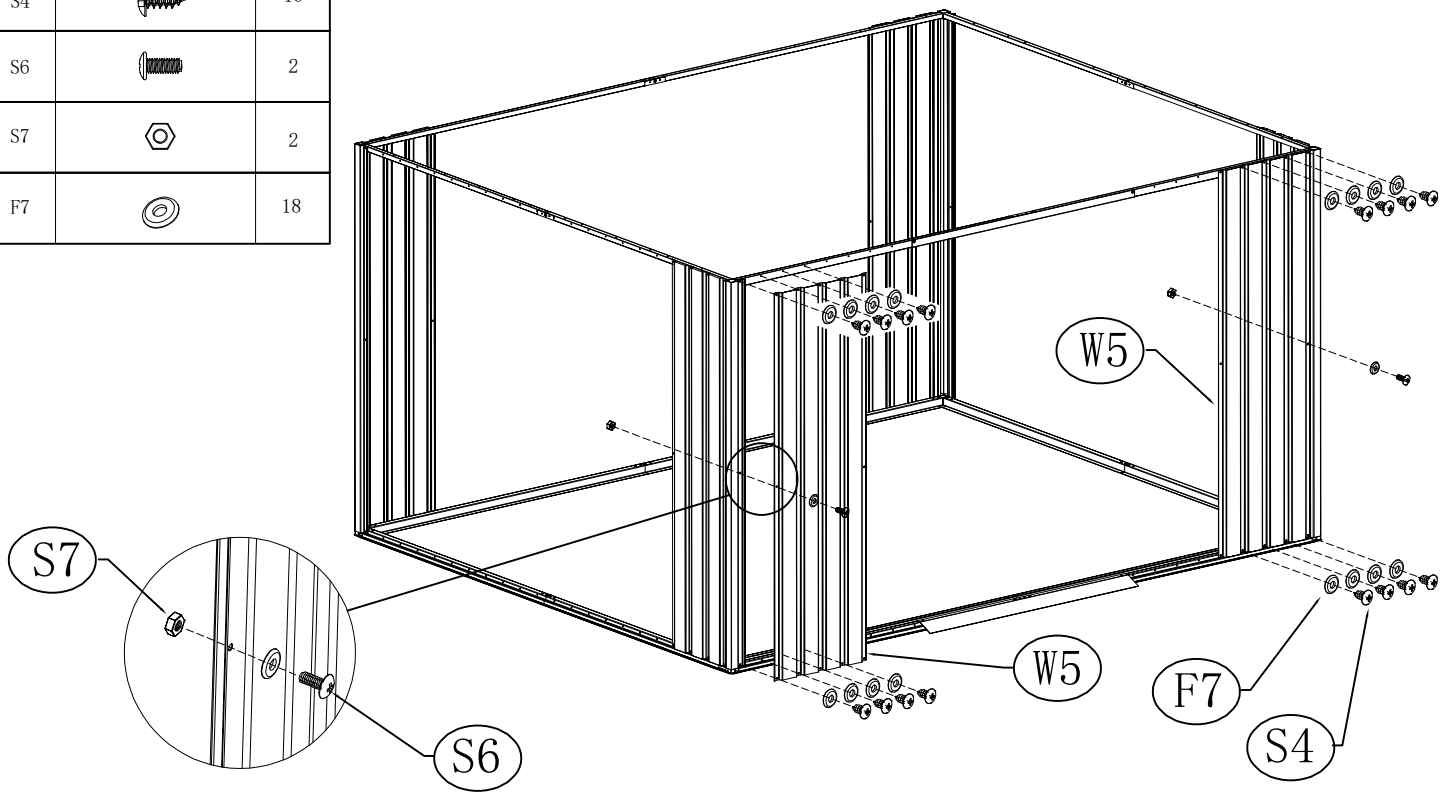


| NO. | PART. | Qty. |
|---|---|---|
| W6 |   | 2 |
| 17L |   | 1 |
| 17R |   | 1 |
| S6 |  | 8 |
| S7 |  | 8 |
| F7 |  | 8 |

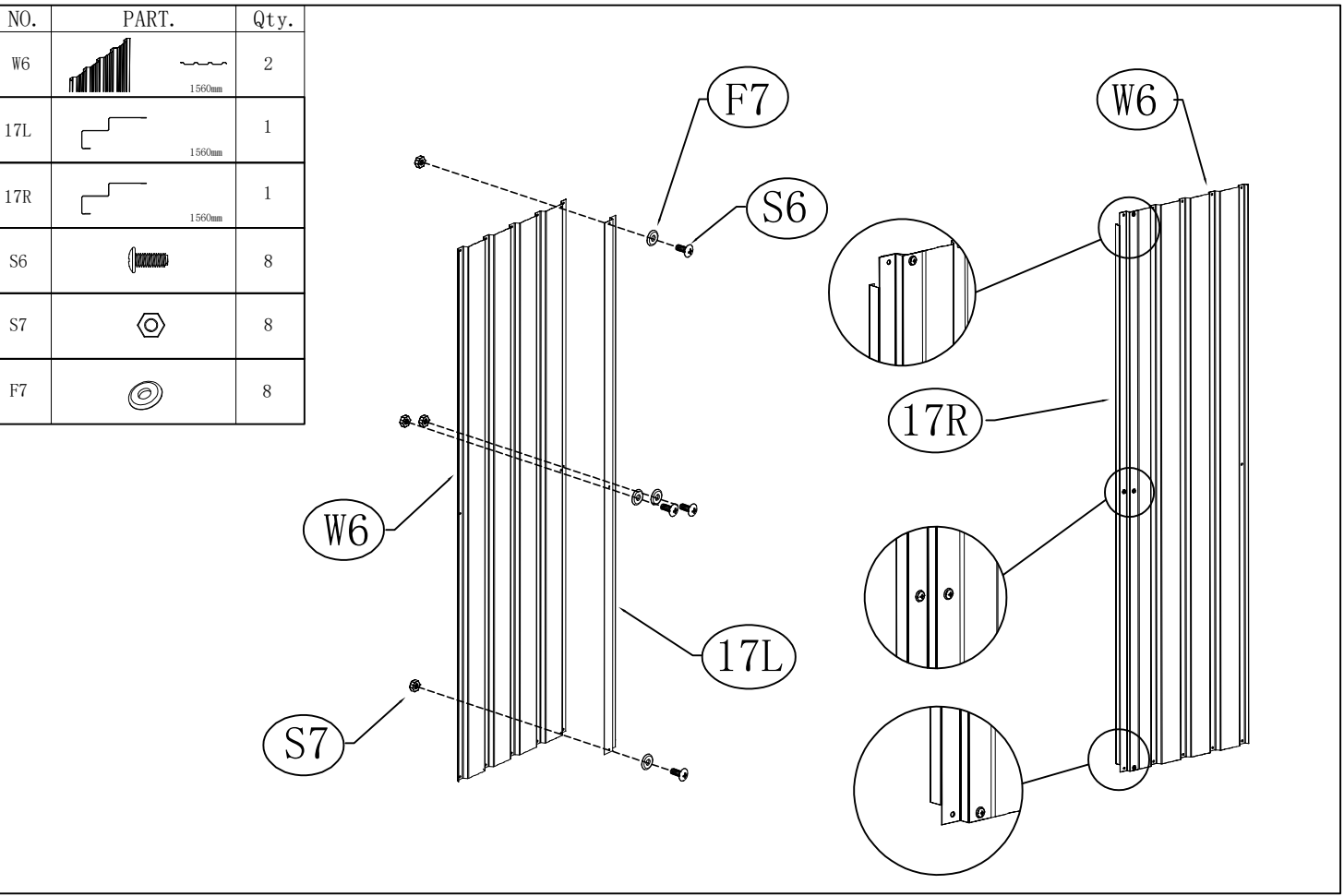

| NO. | PART. | Qty. |
|---|---|---|
| S4 | | 20 |
| S6 | | 2 |
| S7 | | 2 |
| F7 | | 22 |

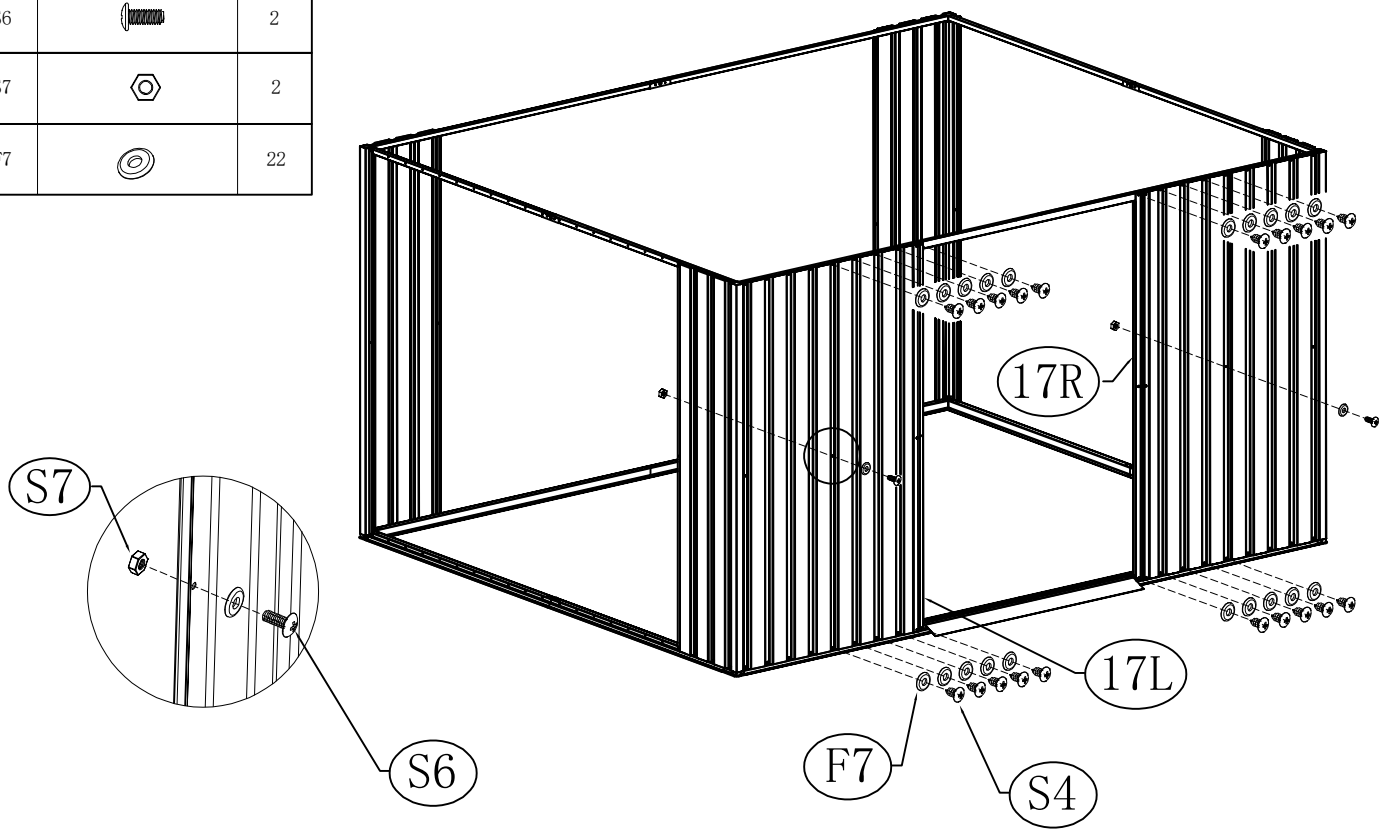


| NO. | PART. | Qty. |
|---|---|---|
| W3 | 1560mm | 2 |
| W5 | 1560mm | 3 |
| S4 | | 38 |
| S6 | | 6 |
| S7 | | 6 |
| F7 | | 44 |

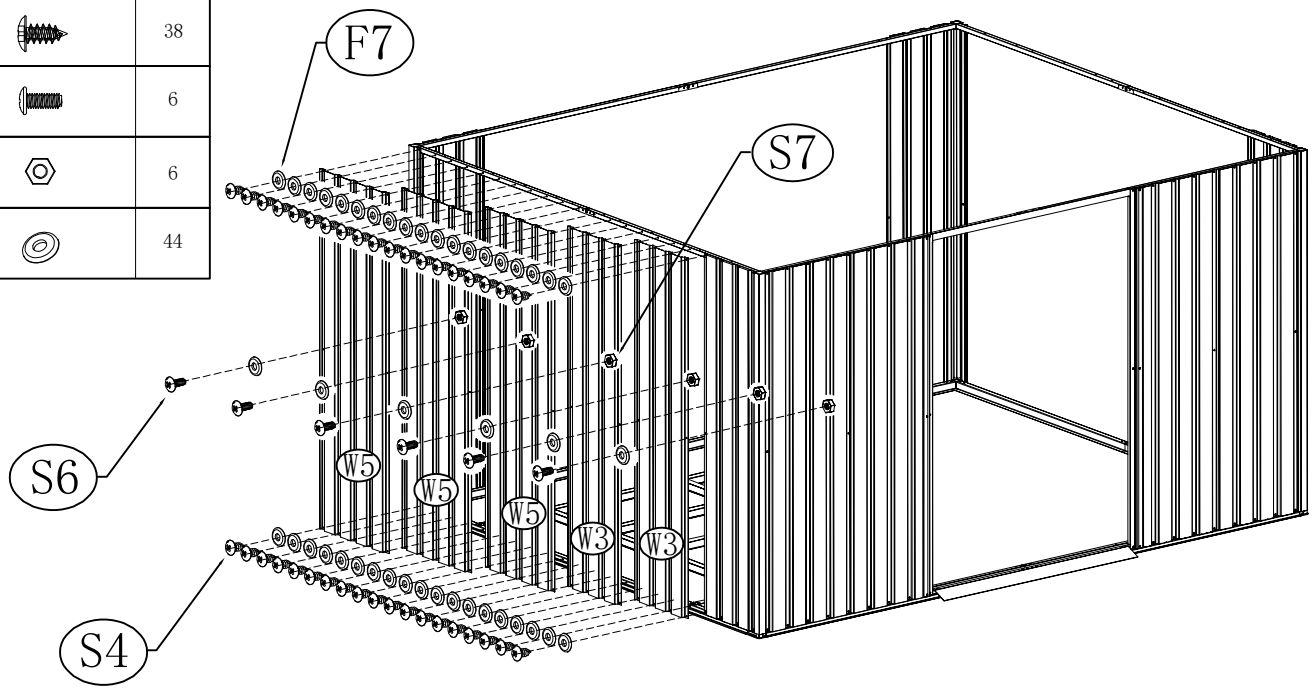

| NO. | PART. | Qty. |
|---|---|---|
| W3 | 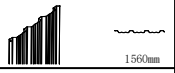  | 2 |
| W5 | 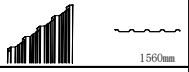  | 3 |
| S4 | | 38 |
| S6 | | 6 |
| S7 |  | 6 |
| F7 | | 44 |

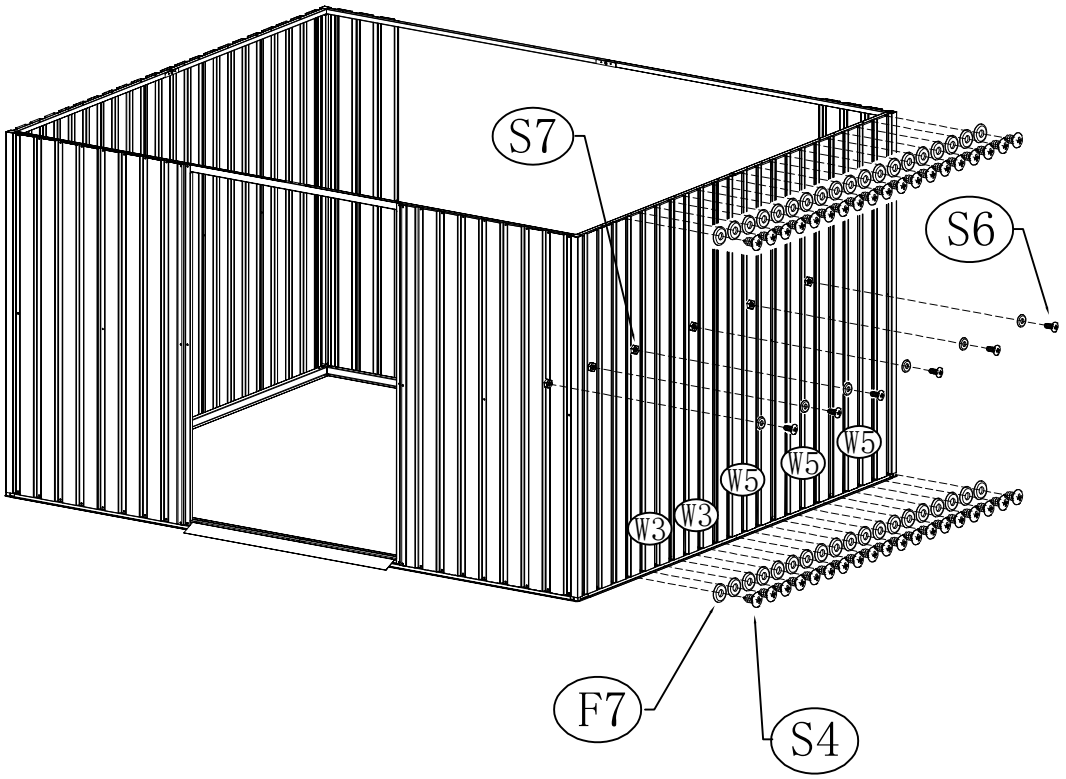


| NO. | PART. | Qty. |
|---|---|---|
| W5 | 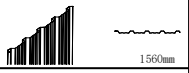  | 5 |
| S4 | | 42 |
| S6 | | 6 |
| S7 |  | 6 |
| F7 | | 48 |

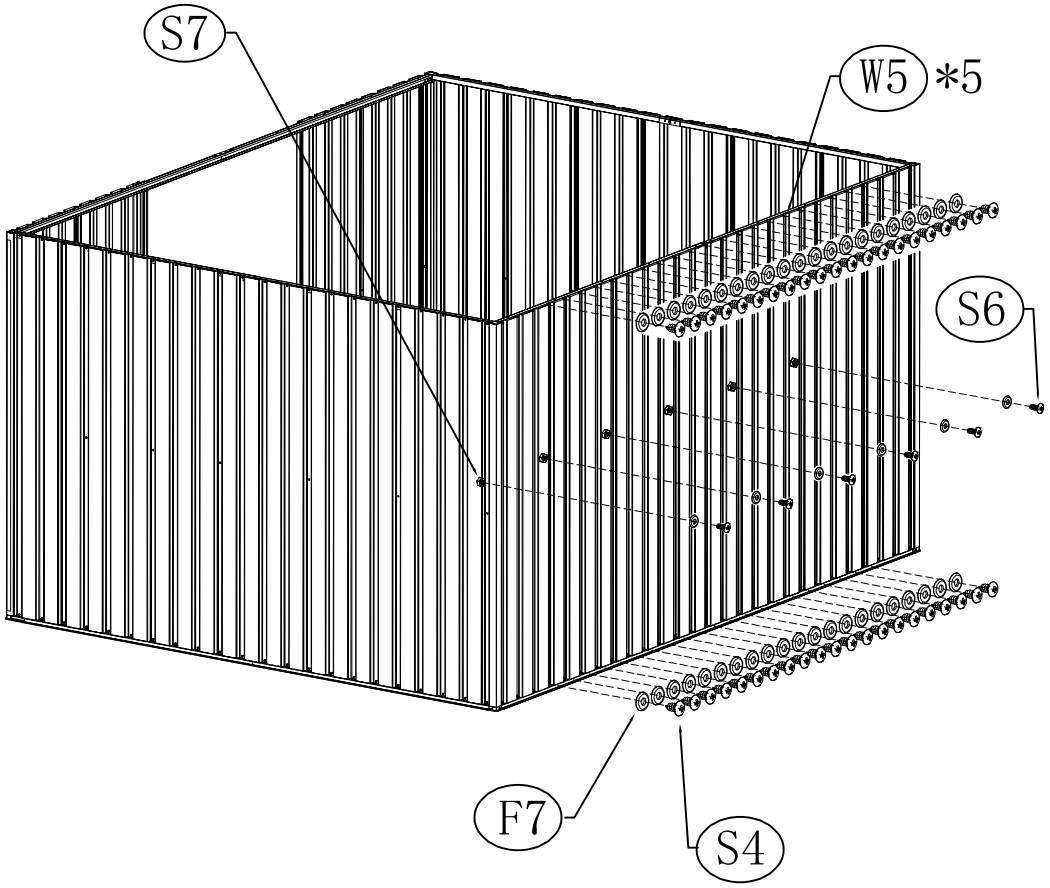

| NO. | PART. | Qty. |
|---|---|---|
| 10F |  405mm | 1 |
| 10B |  405mm | 1 |
| 11L | 320mm | 2 |
| 11R | 320mm | 2 |
| 21L | 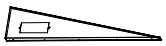 | 2 |
| 21R | | 2 |
| F6 | 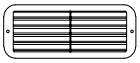 | 4 |
| S6 | | 12 |
| S7 | | 12 |

X2

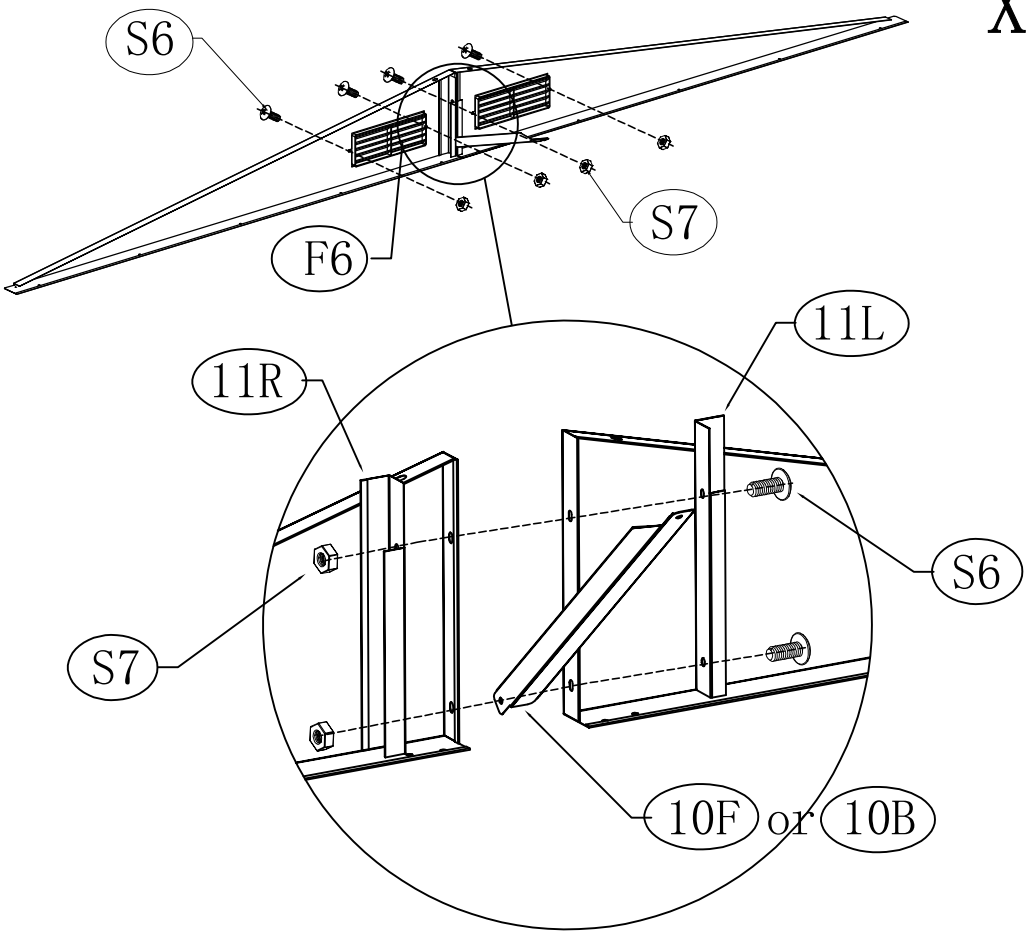


| NO. | PART. | Qty. |
|---|---|---|
| S4 |  | 22 |

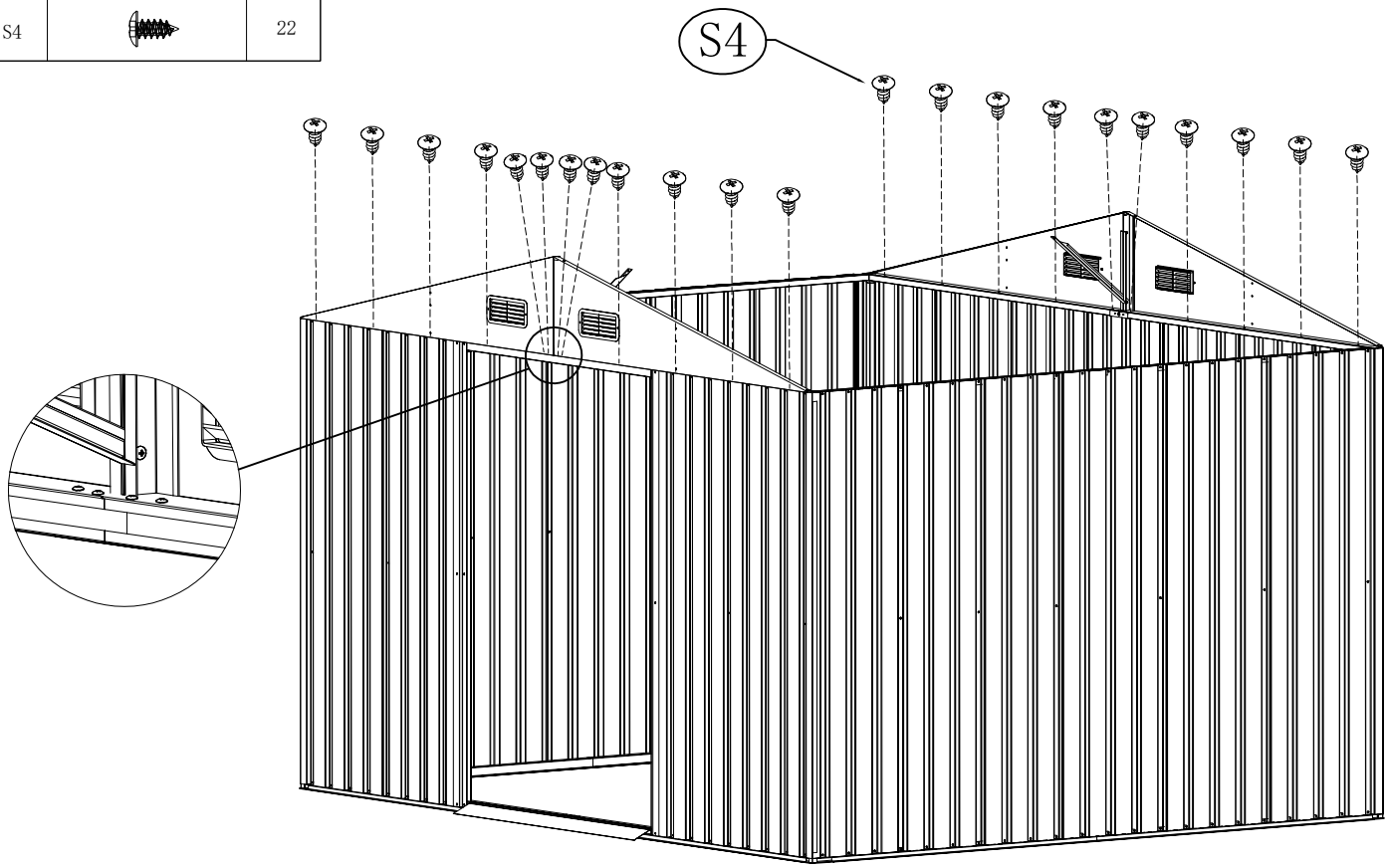

| NO. | PART. | Qty. |
|---|---|---|
| 9 |  1226mm | 2 |
| S6 |  | 6 |
| S7 |  | 6 |

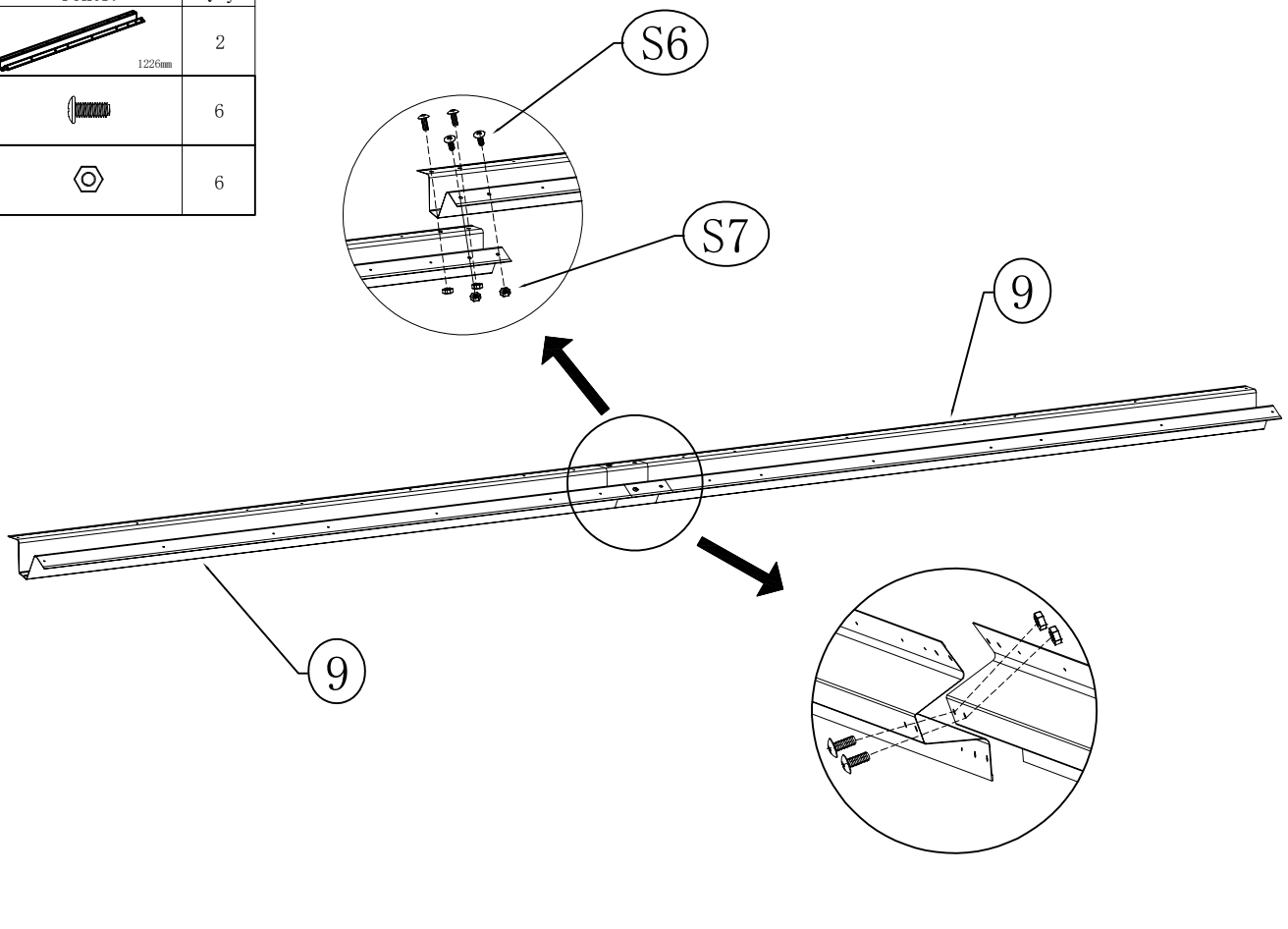


| NO. | PART. | Qty. |
|---|---|---|
| S4 | | 2 |

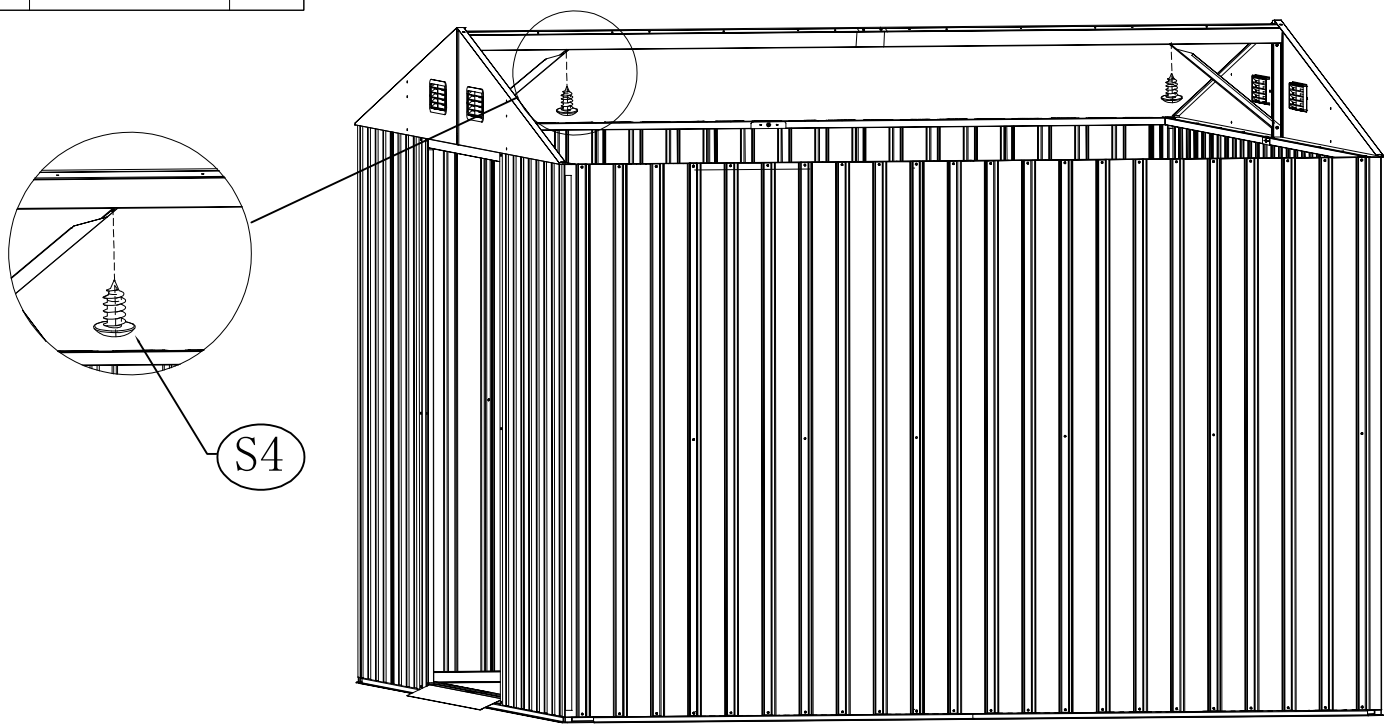

| NO. | PART. | Qty. |
|---|---|---|
| 25 | 1236mm | 2 |
| 26 | 1236mm | 2 |
| 27 | 165mm | 4 |
| S6 | | 16 |
| S7 | | 16 |

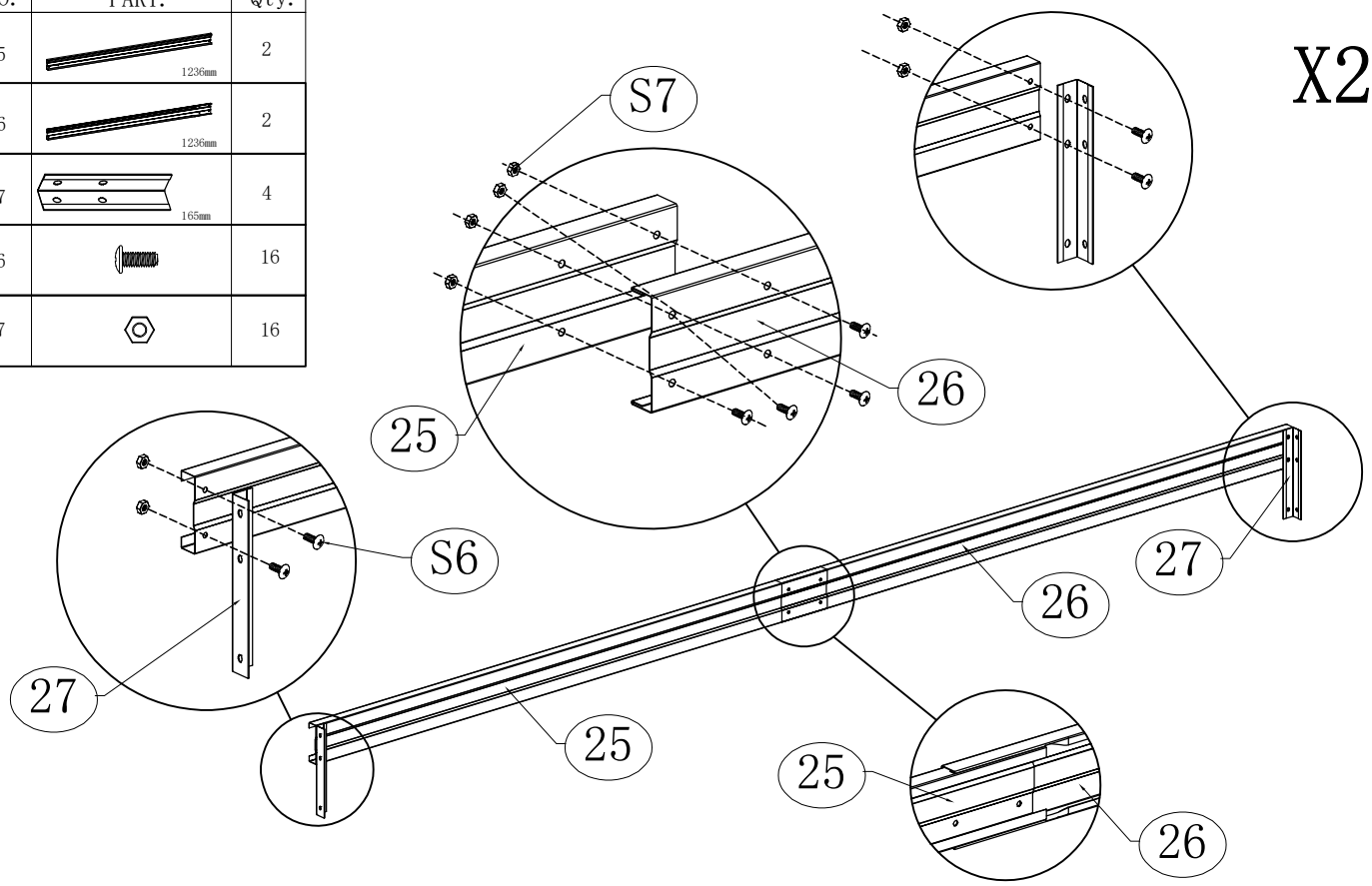


| NO. | PART. | Qty. |
|---|---|---|
| S8 | | 12 |
| S9 | | 12 |
| F7 | | 12 |

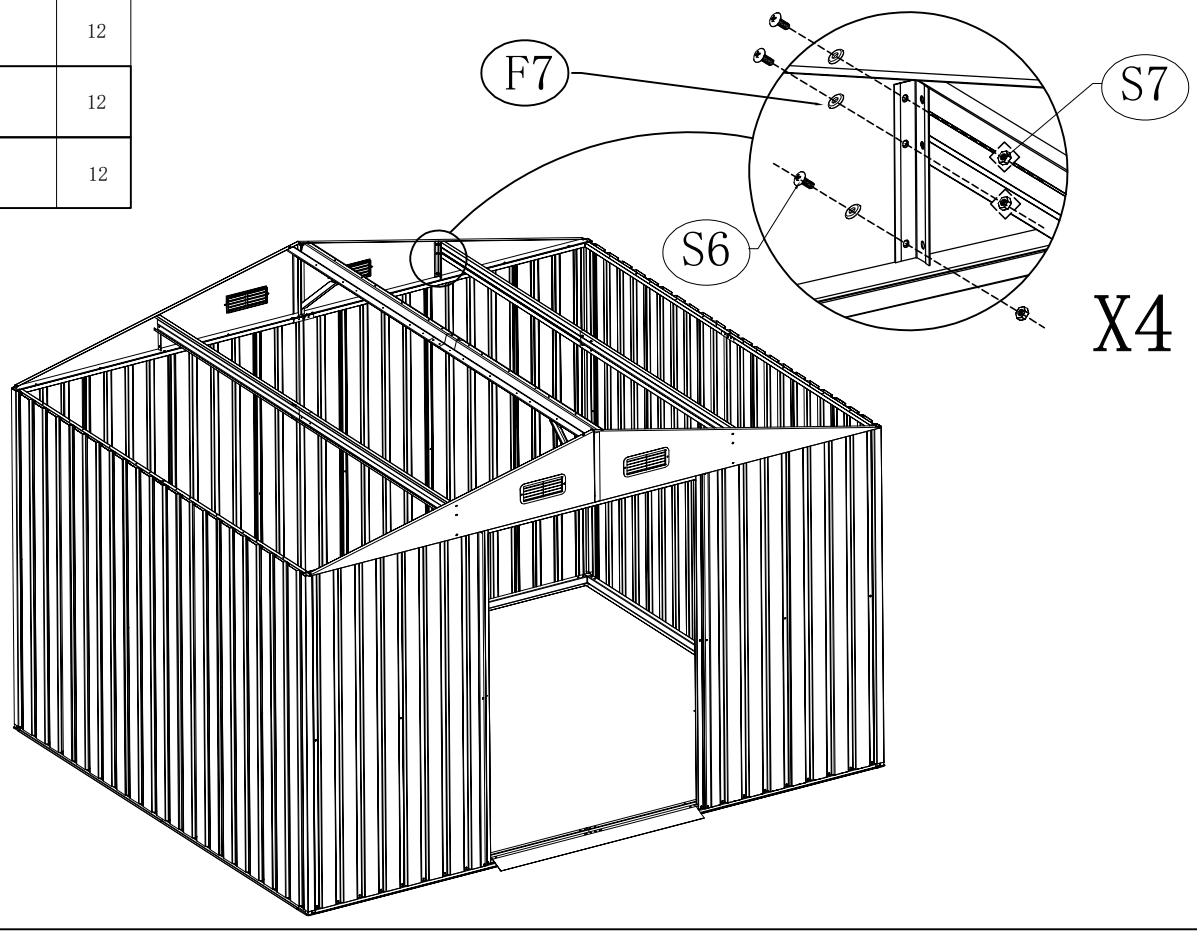

| NO. | PART. | Qty. |
|---|---|---|
| W15 | 1535mm | 4 |
| S4 | | 30 |
| F7 | | 30 |

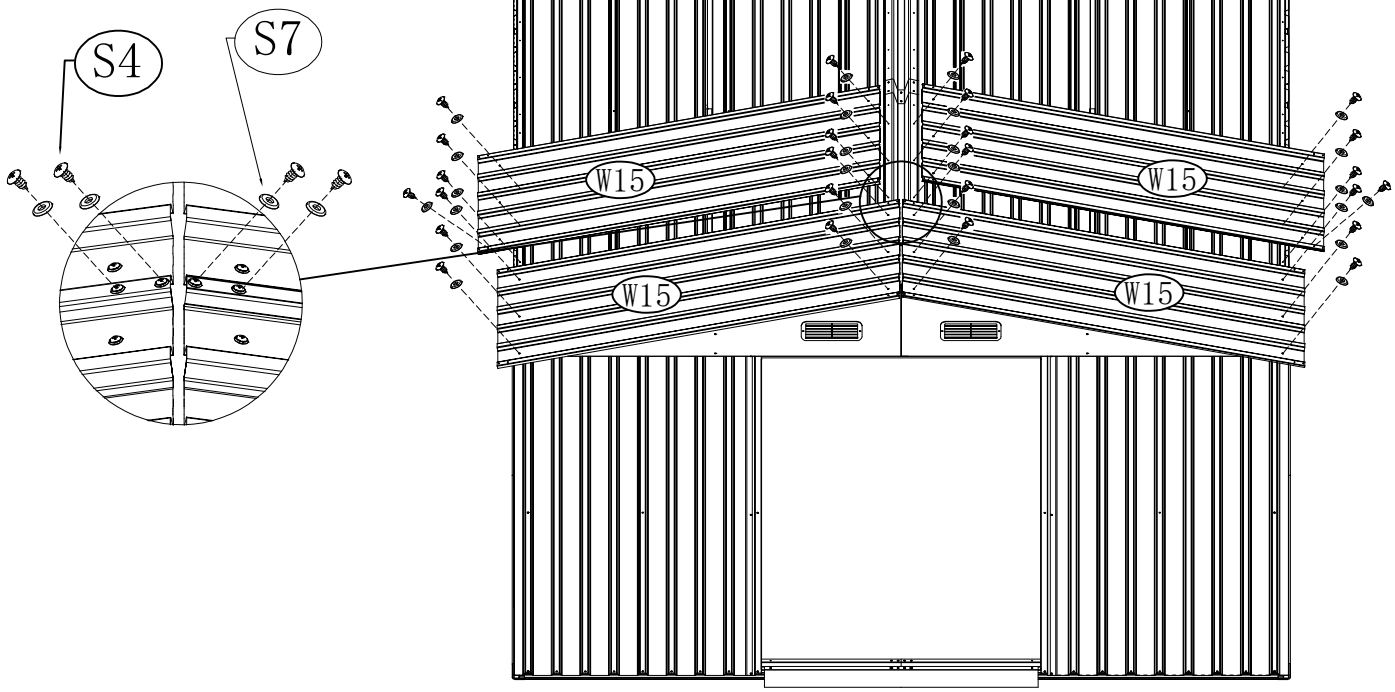


| NO. | PART. | Qty. |
|---|---|---|
| W12 | 1535mm | 2 |
| W15 | 1535mm | 4 |
| S4 | | 50 |
| F7 | | 50 |

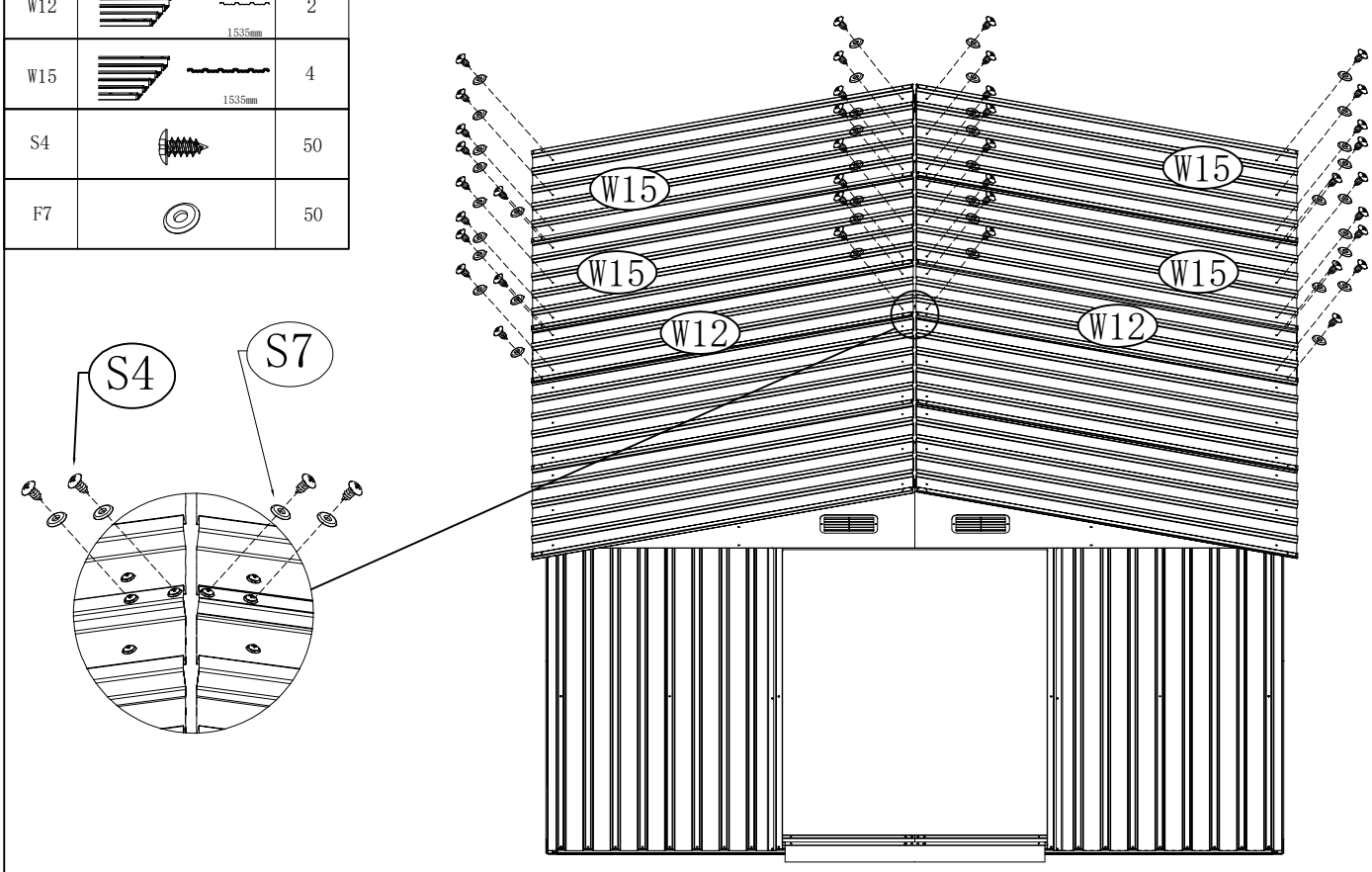

| NO. | PART. | Qty. |
|---|---|---|
| F8 | | 28 |

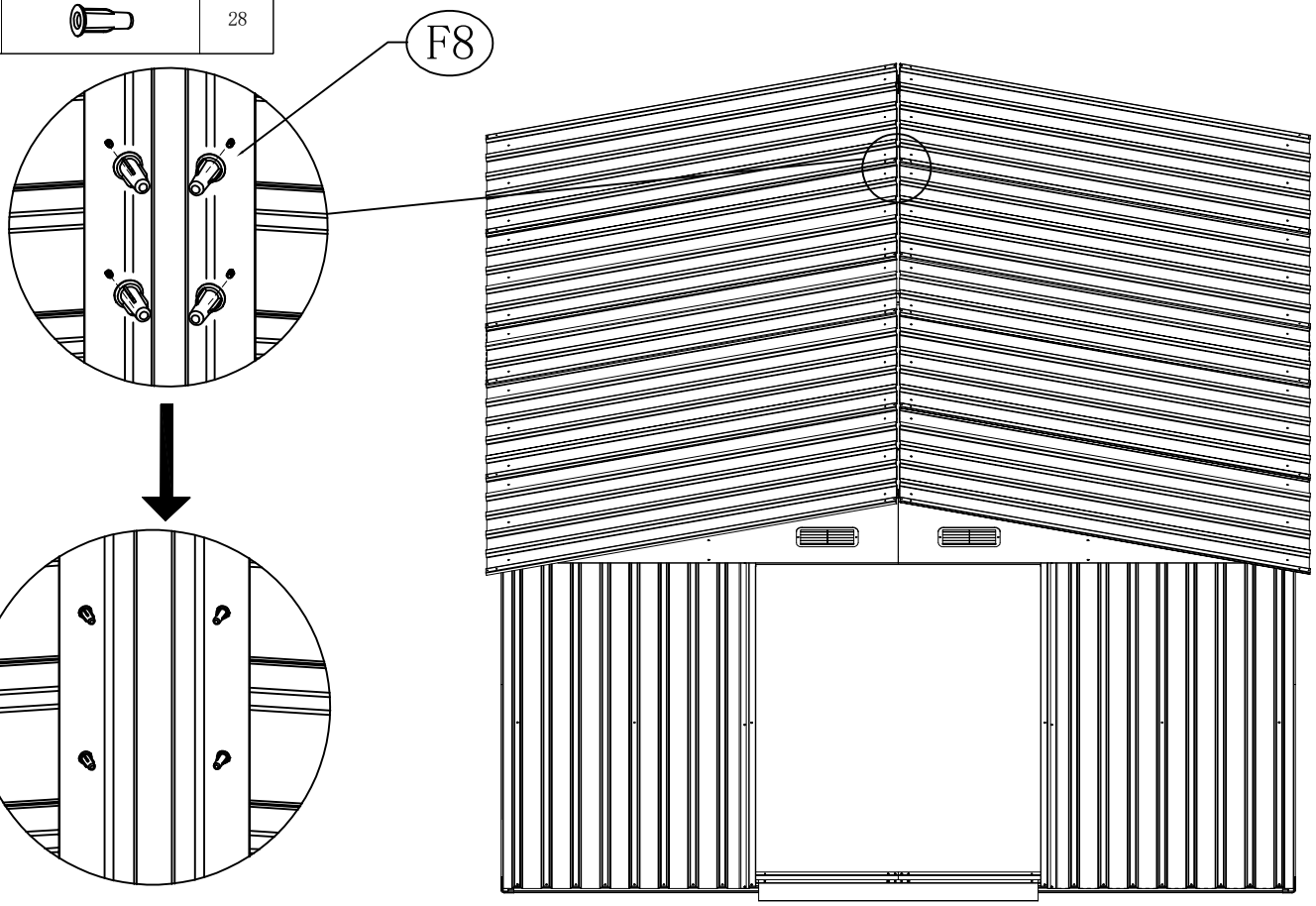


| NO. | PART. | Qty. |
|---|---|---|
| 20 | 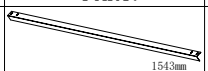  | 4 |
| S4 |  | 8 |
| F7 |  | 8 |

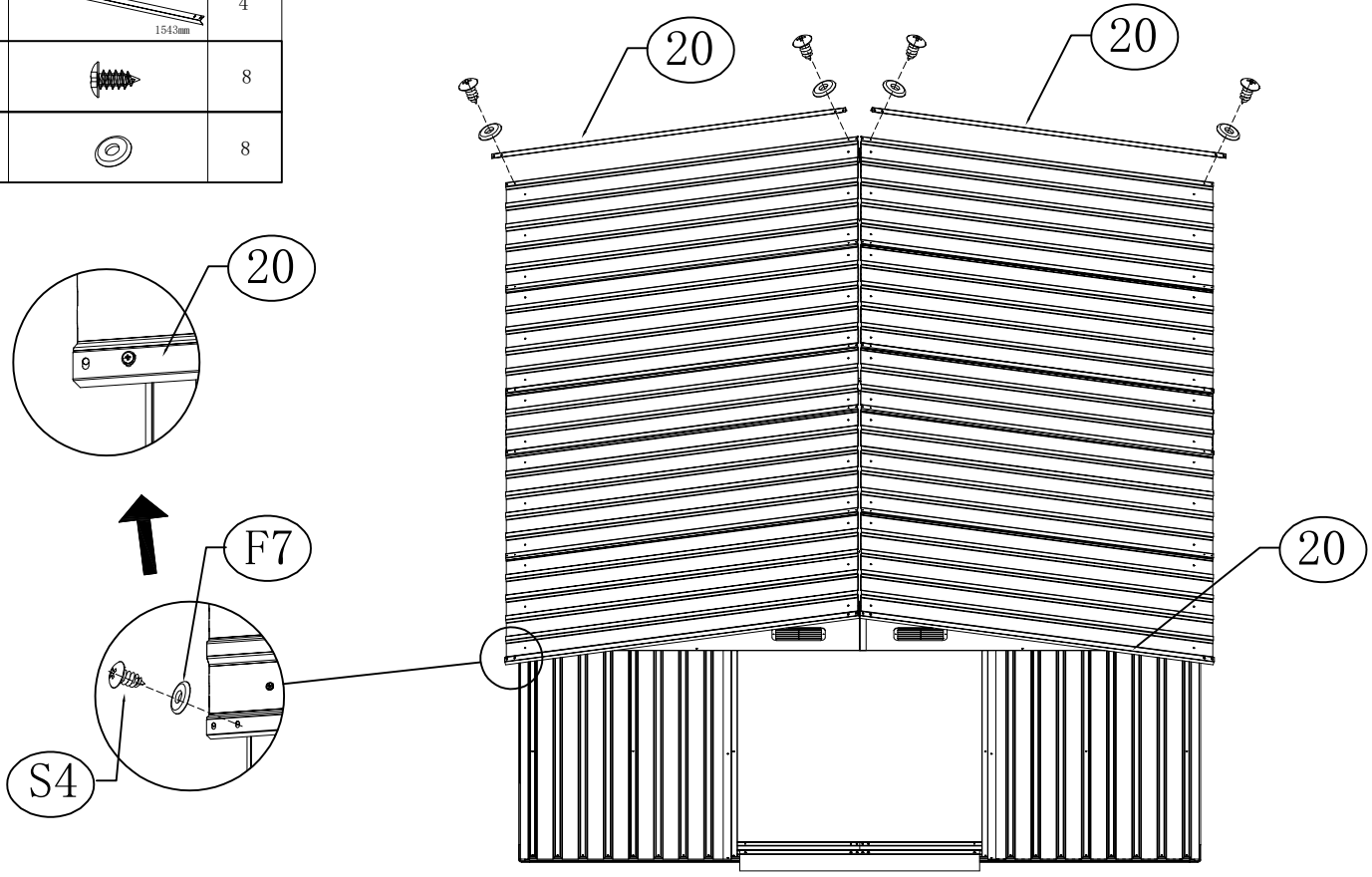

| NO. | PART. | Qty. |
|---|---|---|
| 19L | 1072mm | 2 |
| 19R | 1393mm | 2 |
| F4 | | 4 |
| S4 | | 8 |
| S8 | | 4 |
| F7 | | 12 |
| F10 | | 2 |

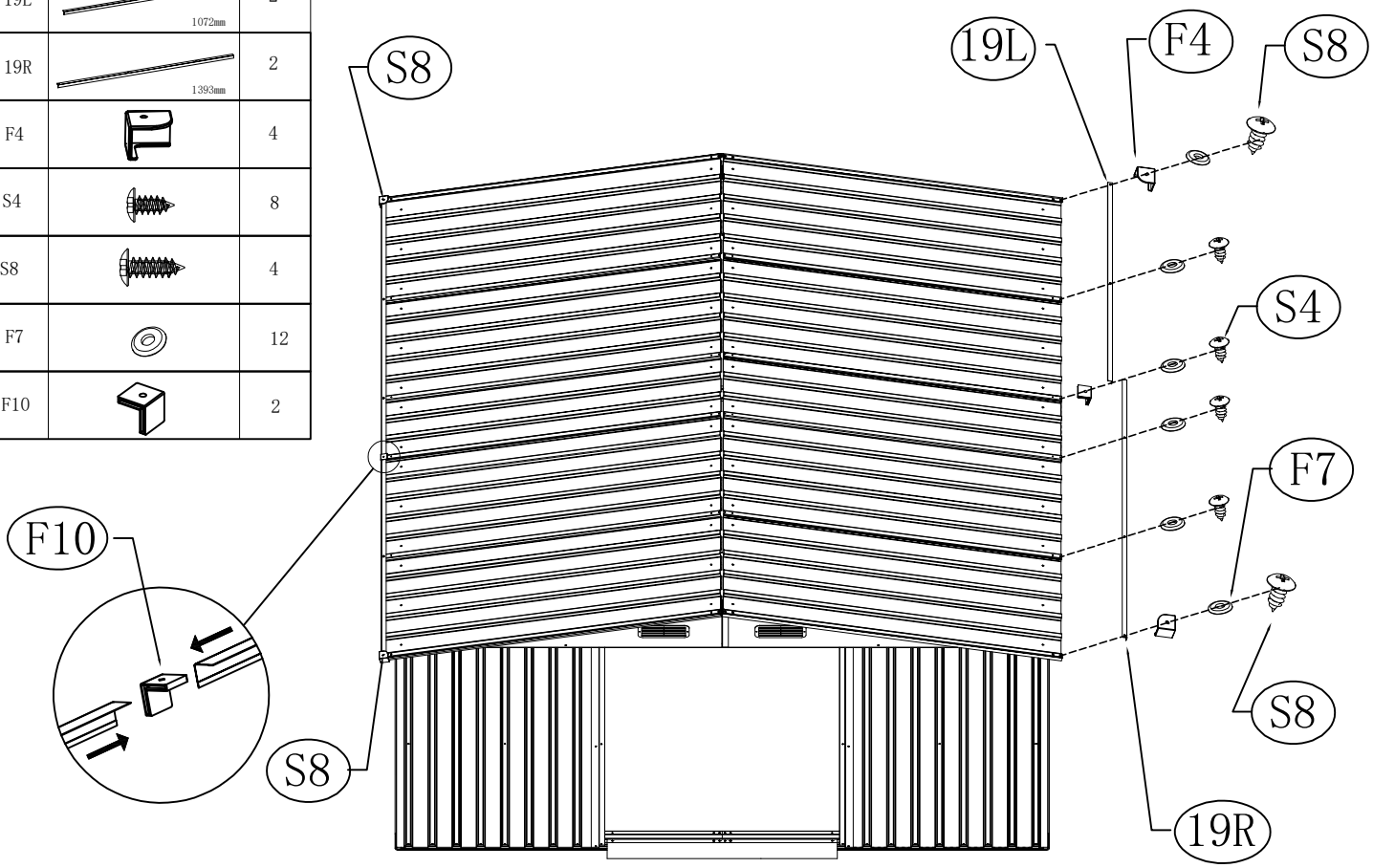


| NO. | PART. | Qty. |
|---|---|---|
| F8 | | 24 |

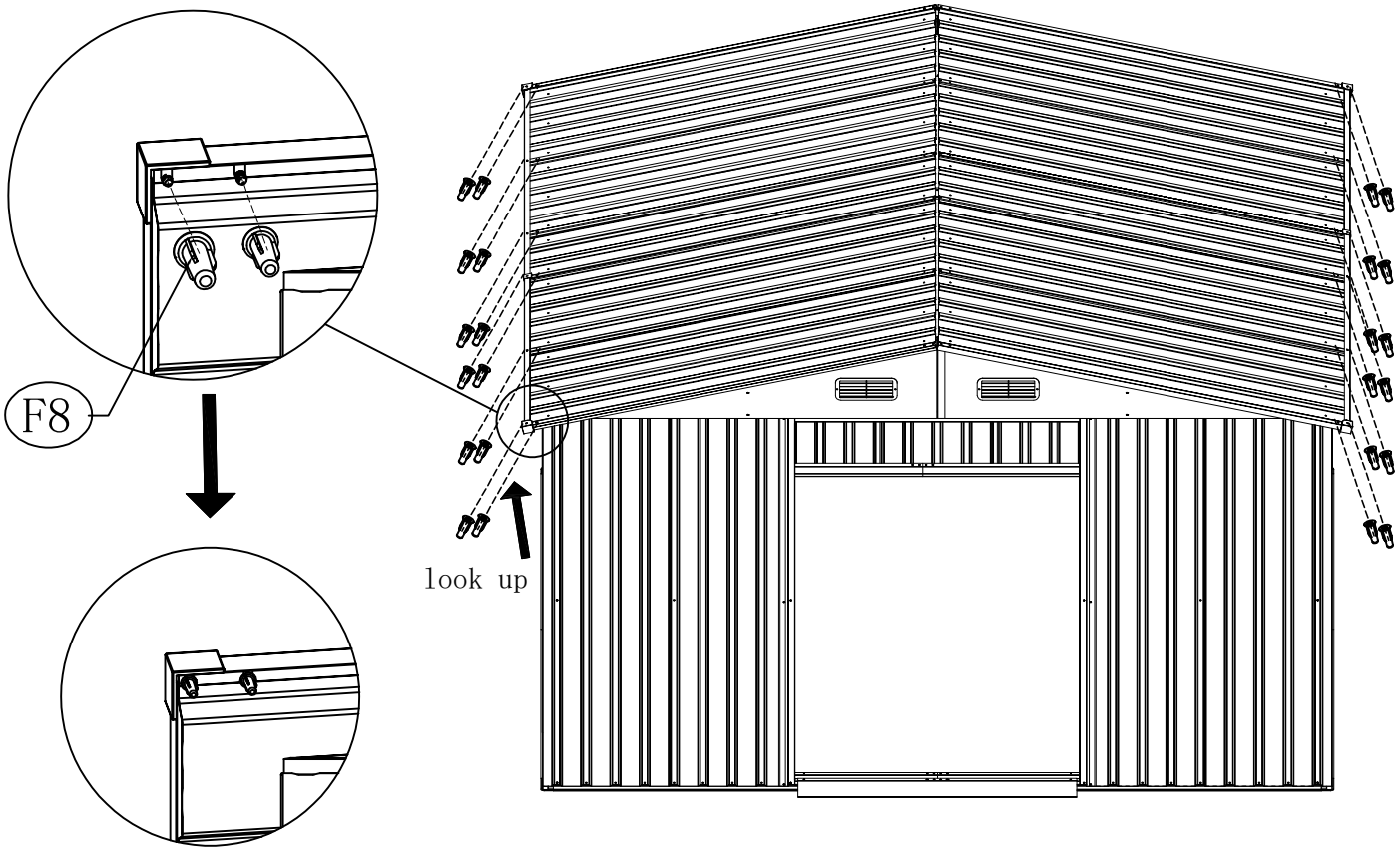

| NO. | PART. | Qty. |
|---|---|---|
| 18 |  1250.5mm | 2 |
| F5 |  | 2 |
| S4 |  | 6 |
| S6 |  | 2 |
| S7 |  | 2 |
| F7 |  | 8 |

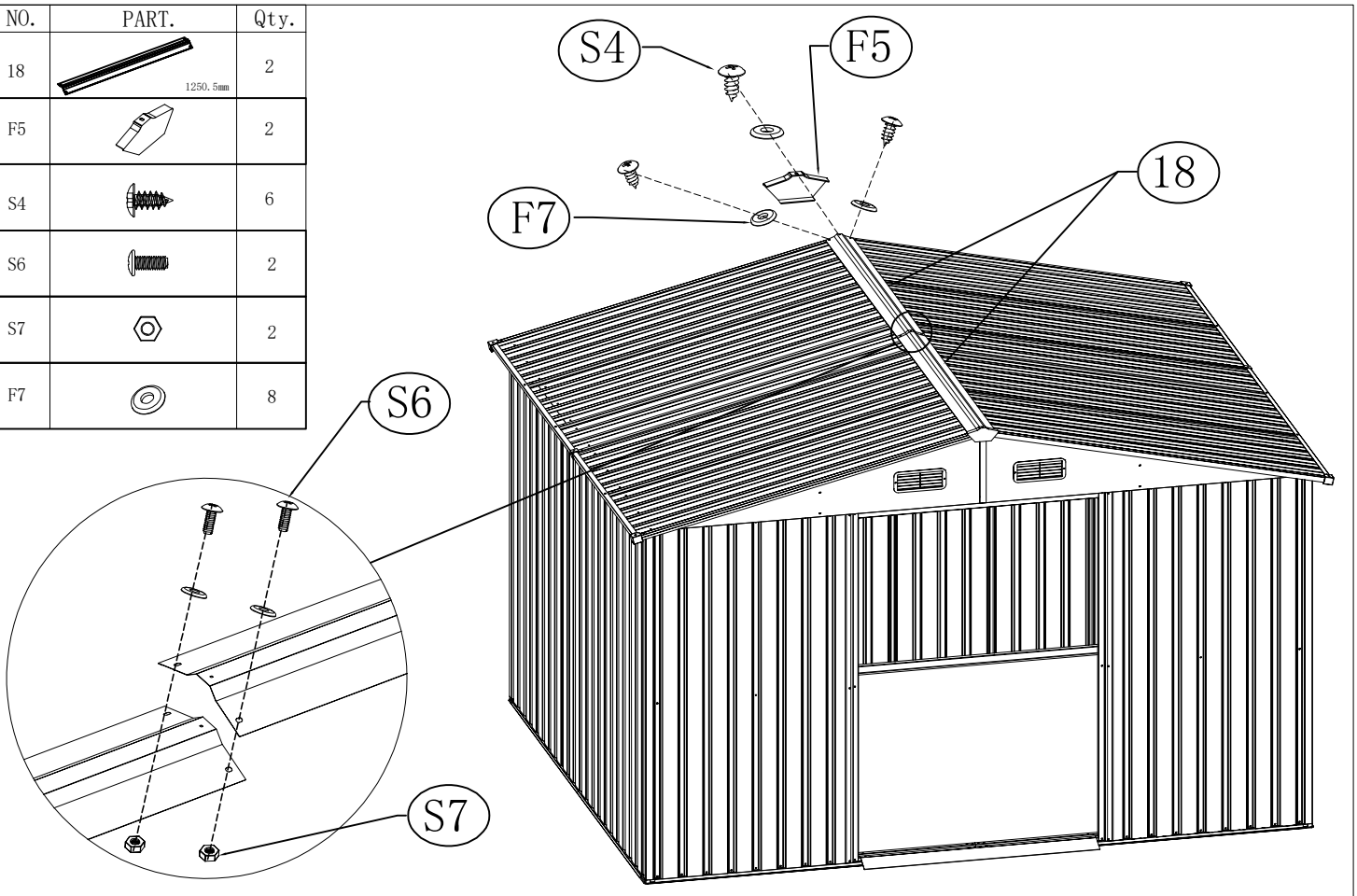


| NO. | PART. | Qty. |
|---|---|---|
| M1 | 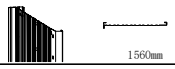 1560mm | 1 |
| M2 | 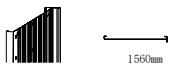 1560mm | 1 |
| 22 | 532mm | 6 |
| F1 | | 4 |
| S4 | | 12 |
| S6 | | 24 |
| S7 | | 24 |
| F7 | | 36 |

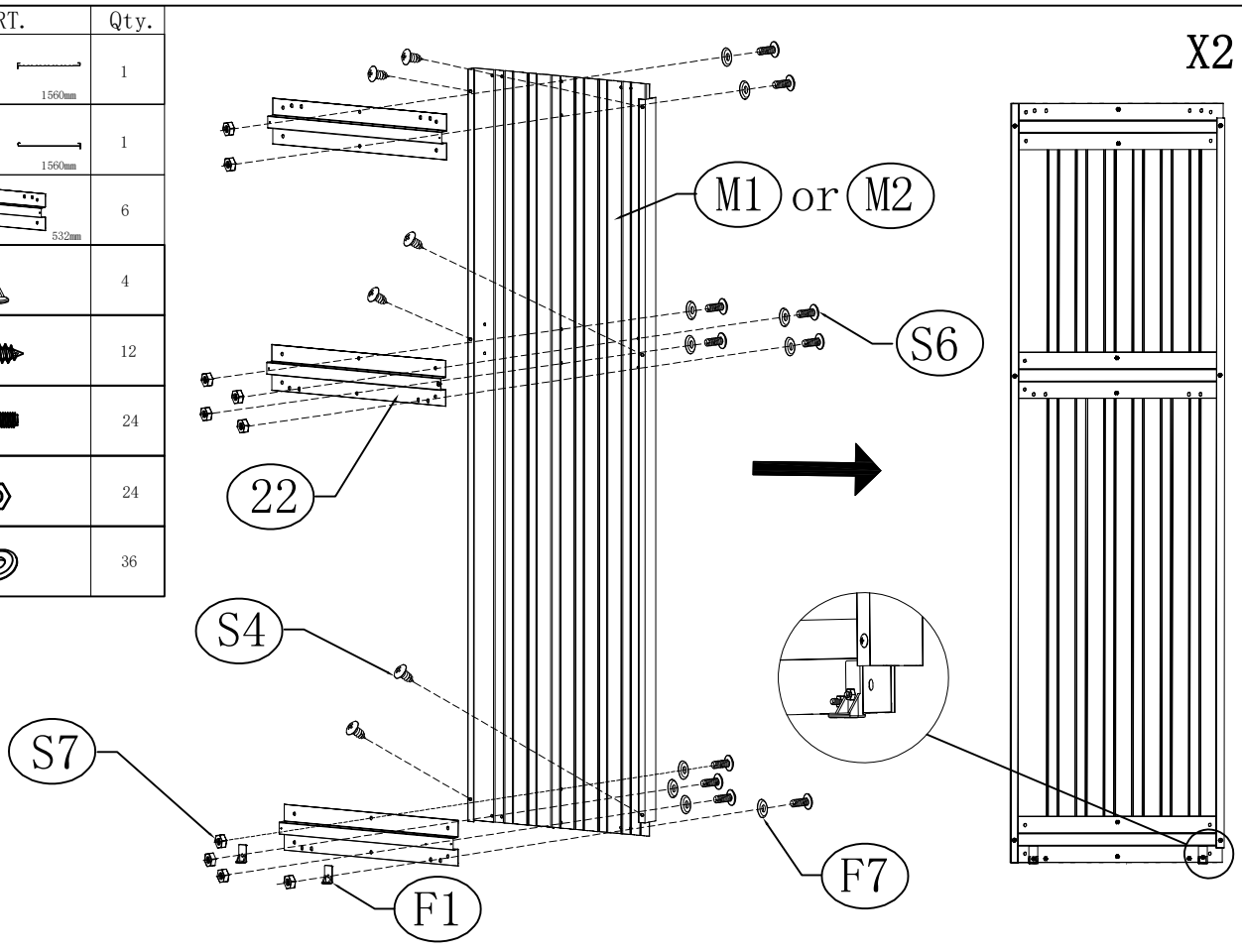

| NO. | PART. | Qty. |
|---|---|---|
| F2 | | 2 |
| S6 |  | 4 |
| S7 |  | 4 |

X2

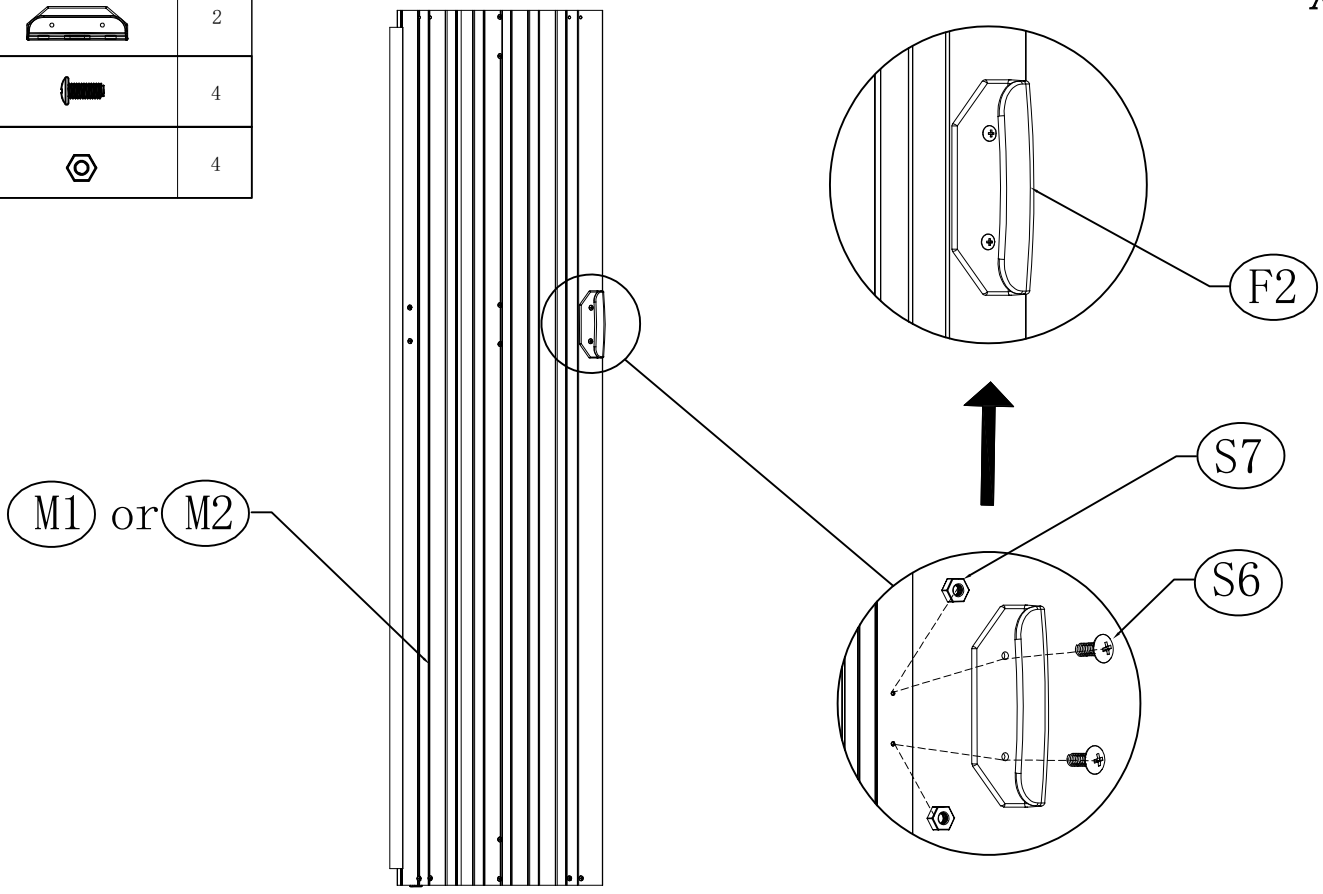


| NO. | PART. | Qty. |
|---|---|---|
| S8 |  | 8 |

X4

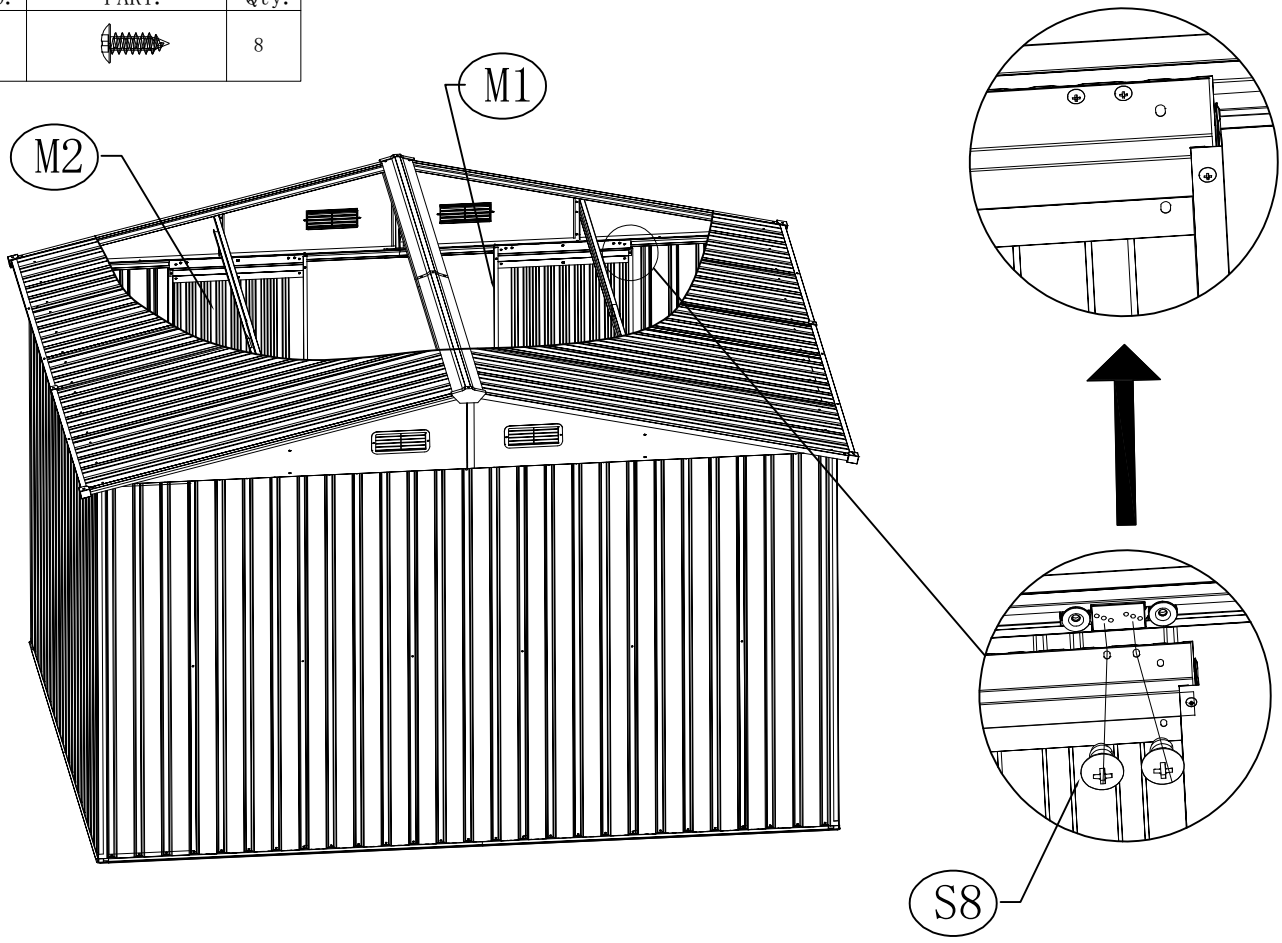

| NO. | PART. | Qty. |
|---|---|---|
| S9 | | 4 |

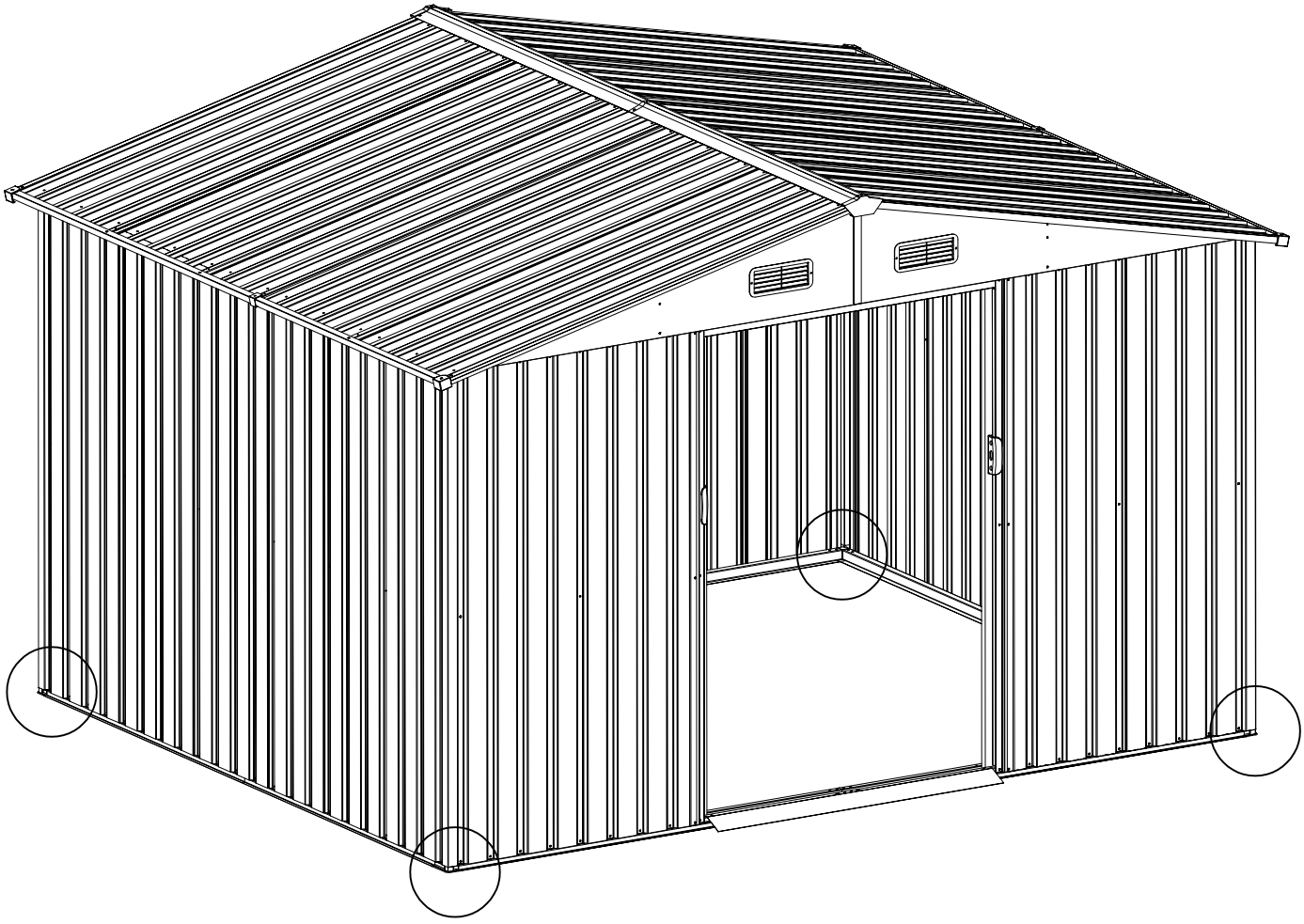

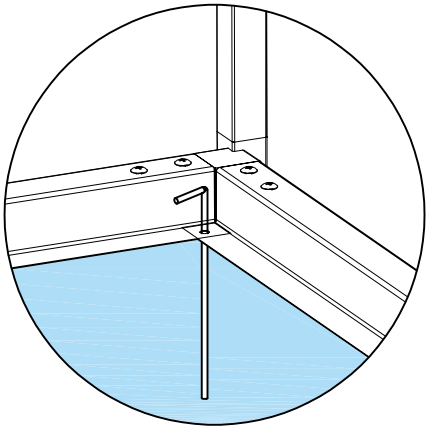

If the shed is installed on grass, the[S9]can be used to increase the stability of the shed.