Technical Report: **96253180581** NOVEMBER 24, 2025
Date Received: NOVEMBER 14, 2025

DAI VIET CO.,LTD
NO. 276/19/13 TRAN HUNG DAO STREET, DONG B QUARTER, DONG HOA WARD, HO CHI MINH CITY, VIETNAM.

Sample Description:	FULL XL LOFT BED WITH STAIR AND DRAWERS		
Vendor:	DAI VIET CO.,LTD	Sample Size:	/
Manufacturer:	DAI VIET CO.,LTD	VPN:	/
Buyer:	GIGACLOUD	SKN/SKU No.:	N709P383543, N709P383544, N709P383545
Agent:	/		/
Labeled Age Grade:	/	PO No.:	V226VDY20251017WM
Appropriate Age Grade:	/	Ref #:	/
Client Specified Age Grade:	/	Country of Origin:	VIETNAM
Tested Age Grade:	/	Assortment No.:	/
UPC Code:	/	Department No.:	/
Phase of Production:	/	Item#:	/
Color:	WHITE, BROWN	Date of Production:	/
Program:	/	Model/Style#:	/
Previous No:	N/A	Country of Destination:	USA

TEST PROPERTY	PASS	FAIL	DATA	N/A	Remark
CPSIA Total Lead Content in Surface Coating	X				
CPSIA Total Lead Content In Substrate Materials	X				
15 U.S.C 1278a Total Lead Content	X				
16 CFR 1213 Bunk Beds	X				
16 CFR 1513 Requirements for Bunk Beds	X				
ASTM F1427-21e1 Bunk Beds	X				

Note(s):

- **The Chemical test following reports listed:**

No.	Tested component:	Chemical test	Reference report	Report issued date
1	White Coating/ Wood	Lead	96251320694	MAY 16, 2025
2	Silver Plastic With Black Print & Glue (Label Of Plug)		96252550345	SEPTEMBER 26, 2025
3	Transparent Plastic With White Paper & Black Print (Manufacturer Label)			
4	Black Plastic (Plug)			
5	Black Plastic (Cable Connect Plug/ Cable Connect Led)			
6	Black Plastic (Cord)			
7	Black Plastic With White Print (Wrap Cord)			
8	Transparent Plastic (Cover Electric Led)			
9	No Coating (All Electric Component)			

Bureau Veritas
Consumer Products Services (VN) Ltd.
Lot C7-C9, Conurbation 2, Cat Lai Industrial Zone, Thanh My Loi Ward, Thu Duc City, HCMC, Vietnam
Tel: 84-028-37421604~6 Fax: 84-028-37421603
website:www.bureauveritas.com/cps

This report is governed by, and incorporates by reference, the Conditions of Testing as posted at the date of issuance of this report at http://www.bureauveritas.com/home/about-us/our-business/cps/about-us/terms-conditions/ and is intended for your exclusive use. Any copying or replication of this report to or for any other person or entity, or use of our name or trademark, is permitted only with our prior written permission. This report sets forth our findings solely with respect to the test samples identified herein. The results set forth in this report are not indicative or representative of the quality or characteristics of the lot from which a test sample was taken or any similar or identical product unless specifically and expressly noted. Our report includes all of the tests requested by you and the results thereof based upon the information that you provided to us. Measurement uncertainty is only provided upon request for accredited tests. Statements of conformity are based on simple acceptance criteria without taking measurement uncertainty into account, unless otherwise requested in writing. You have 60 days from date of issuance of this report to notify us of any material error or omission caused by our negligence or if you require measurement uncertainty; provided, however, that such notice shall be in writing and shall specifically address the issue you wish to raise. A failure to raise such issue within the prescribed time shall constitute your unqualified acceptance of the completeness of this report, the tests conducted and the correctness of the report contents.

- Self-assembled sample by vendor was submitted for lab testing.
- Lab only checks warning statements present in assembly instruction as per tested standard only, not check any relative assembly: part list, hardware, step by step assembly**.**
- The assembly instruction, carton, was not tested.
- **The photo of actual sample is different with photo of sample on carton, assembly instruction (Please see figure 1-3)**

If there is any question regarding this report, please contact the following lab personnel:

Administrative inquiries, please contact:
Primary Contact: Elise Vo, Tel: 84-028-37421-604 ~ 6, Ext: 394; email: elise.vo@bureauveritas.com
Back-up Contact: Cynthia Vuong, Tel: 848-37421-604 ~ 6, Ext: 641; email: cynthia.vuong@bureauveritas.com

Technical inquiries, please contact:
Primary Contact: Terry Nguyen, Tel: 84-028-37421-604 ~ 6, Ext: 355; email: terry.nguyen@bureauveritas.com
Back-up Contact: Louis Tran, Tel: 84-028-37421-604 ~ 6, Ext: 339; email: louis.tran@bureauveritas.com

BUREAU VERITAS CONSUMER PRODUCTS SERVICES (VN) LTD.

TERRY NGUYEN
LAB MANAGER – HARDLINE, TOYS & JUVENILE PRODUCTS DIVISION

SAMPLE DESCRIPTION ASSIGNED BY LABORATORY			
Test Item(s)	**Sample description/ Location**	**Material**	**Style(s)**
I001	Brown Coating (Wood)	Coating	-
I002	Black / Yellow Overlapping Coating (Warning Label)	Coating	-
I003	Black / Red / Yellow / White Overlapping Coating (CA Prop 65 Label)	Coating	-
I004	Black / White Overlapping Coating (Tracking Label)	Coating	-
I005	Black / White Overlapping Coating (Country Origin Label)	Coating	-
I006	Red / Yellow Overlapping Coating (Maximum Weight Label)	Coating	-
I007	MDF	Wood	-
I008	Plywood	Wood	-
I009	Yellow Metal (Flat Head Screw)	Metal	-
I010	Silver Metal (U Bracket)	Metal	-
I011	Silver Metal (L Bracket)	Metal	-
I012	Silver Metal (Mending Plate)	Metal	-
I013	Silver Metal (Bolt)	Metal	-
I014	Silver Metal (Barrel Nut)	Metal	-
I015	Yellow Metal (Round Head Screw)	Metal	-
I016	Metal Frame (Caster)	Metal	-
I017	Metal Rivet (Caster)	Metal	-
I018	White Plastic Wheel (Caster)	Hard Plastic	-

TEST RESULT

Total Lead Content in Surface Coating
- United States Consumer Product Safety Improvement Act (CPSIA) of 2008, Section 101(a)(2) / United States Code of Federal Regulations (CFR), Title 16, Part 1303

Test Method : U. S. CPSC-CH-E1003-09.1 (February 25, 2011).

Maximum Allowable Limit :	**90 mg/kg**

-	**Unit**	**Result**	
Test Item(s)	-	I001+I002+I003	I004+I005+I006
Parameter	-	-	-
Total Lead (Pb)	mg/kg	ND	ND
Conclusion	-	PASS	PASS

Note / Key :

ND = Not detected NA = Not applicable “>” = Greater than
mg/kg = milligram(s) per kilogram = ppm = part(s) per million
Reporting Limit (mg/kg) : 10

Remark :

- Component(s) in Test Item(s) may not able to be tested individually due to overlapping.

TEST RESULT

Total Lead Content in Substrate:
- United States Consumer Product Safety Improvement Act (CPSIA) Section 101(a)(2)

Test Method : U. S. CPSC Test Method CPSC-CH-E1001-08.3 (November 15, 2012) or U. S. CPSC Test Method CPSC-CH-E1002-08.3 (November 15, 2012).

Maximum Allowable Limit :	**100 mg/kg**

-	**Unit**	**Result**				
Test Item(s)	-	I007+I008	I009	I010	I011	I012
Parameter	-	-	-	-	-	-
Total Lead (Pb)	mg/kg	ND	ND	ND	ND	ND
Conclusion	-	PASS	PASS	PASS	PASS	PASS

-	**Unit**	**Result**					
Test Item(s)	-	I013	I014	I015	I016	I017	I018
Parameter	-	-	-	-	-	-	-
Total Lead (Pb)	mg/kg	ND	ND	ND	ND	ND	ND
Conclusion	-	PASS	PASS	PASS	PASS	PASS	PASS

Note / Key :

ND = Not detected NA = Not applicable “>” = Greater than
mg/kg = milligram(s) per kilogram = ppm = part(s) per million 10000 mg/kg = 1 % % = percent
Reporting Limit (mg/kg) : 10

Remark :

- According to Children’s Products Containing Lead; Exemptions for Certain Electronic Devices; Final Rule, exemption were granted to steel alloy containing up to 0.35 % lead by weight, aluminum containing up to 0.4 % lead by weight and copper-based alloy containing up to 4 % lead by weight.
- According to Petition Requesting Exception from Lead Content Limits; Notice Granting Exception, exemption was granted to certain aluminum alloy on certain ride-on children`s products containing up to 0.03 % lead weight.

TEST RESULT

Total Lead Content:
15 U.S.C 1278a-Children Product Containing Lead

Maximum Allowable Limit :	**100 mg/kg**

-	**Unit**	**Result**	
Test Item(s)	-	I001+I002+I003	I004+I005+I006
Parameter	-	-	-
Total Lead (Pb)	mg/kg	ND	ND
Conclusion	-	PASS	PASS

-	**Unit**	**Result**				
Test Item(s)	-	I007+I008	I009	I010	I011	I012
Parameter	-	-	-	-	-	-
Total Lead (Pb)	mg/kg	ND	ND	ND	ND	ND
Conclusion	-	PASS	PASS	PASS	PASS	PASS

-	**Unit**	**Result**					
Test Item(s)	-	I013	I014	I015	I016	I017	I018
Parameter	-	-	-	-	-	-	-
Total Lead (Pb)	mg/kg	ND	ND	ND	ND	ND	ND
Conclusion	-	PASS	PASS	PASS	PASS	PASS	PASS

Note / Key :

ND = Not detected NA = Not applicable “>” = Greater than
mg/kg = milligram(s) per kilogram = ppm = part(s) per million 10000 mg/kg = 1 % % = percent
Reporting Limit (mg/kg) : 10

Remark :

- Tested per client’s request

RESULT(S):

REQUIREMENTS FOR BUNK BEDS (FHSA, Title 16, CFR, Part 1213 & 1513)

Section	Description	Results
1213.3 1513.3	Requirements	
1213.3(a) 1513.3(a)	Guardrails	
1213.3(a)(1) 1513.3(a)(1)	Two guardrails required if bed is > 30 inches from ground	M
1213.3(a)(2) 1513.3(a)(2)	One guardrail shall be continuous	M
1213.3(a)(3) 1513.3(a)(3)	No greater than 15 inches between either end	M
1213.3(a)(4) 1513.3(a)(4)	Bunk Beds with ladder, continuous guardrail on other side	M
1213.3(a)(5) 1513.3(a)(5)	Guardrails attached so they cannot be removed without releasing a device	M
1213.3(a)(6) 1513.3(a)(6)	The upper edge shall be no less than 5 inches above top surface	M
1213.3(a)(7) 1513.3(a)(7)	No openings in the structure between lower edge and underside	M
1213.3(b) 1513.3(b)	Bed End Structures	
1213.3(b)(1) 1513.3(b)(1)	The upper edge of end structure shall be at least 5 inches above mattress	M
1213.3(b)(2) 1513.3(b)(2)	No openings in the structure above foundation of the upper bunk that permits passage of the wedge block	M
1213.3(b)(3) 1513.3(b)(3)	Tested in accordance with Section 1213.4(c)	M
1213.3(b)(4) 1513.3(b)(4)	Neck entrapment requirements of Section 1213.4(c)(3)	M
1213.5 1513.5	Marking and Labeling	
1213.5(a) 1513.5(a)	Permanent label with name and address, model # and date code	M
1213.5(b) 1513.5(b)	Permanent Warning Label placement	M
1213.6 1513.6	Instructions	
1213.6(a) 1513.6(a)	Size of mattress and foundation	M
1213.6(b) 1513.6(b)	Safety Warning	-
1213.6(b)(1) 1513.6(b)(1)	Do not allow children under 6 years of age to use the upper bunk	M

REQUIREMENTS FOR BUNK BEDS (FHSA, Title 16, CFR, Part 1213 & 1513)

Section	Description	Results
1213.6(b)(2) 1513.6(b)(2)	Use guardrails on both sides of the upper bunk	M
1213.6(b)(3) 1513.6(b)(3)	Prohibit horseplay on or under beds	M
1213.6(b)(4) 1513.6(b)(4)	Prohibit more than one person on upper bunk	M
1213.6(b)(5) 1513.6(b)(5)	Use ladder for entering or leaving upper bunk	M
1213.6(b)(6) 1513.6(b)(6)	If the bed is placed against a wall, use full length guardrail along wall	M

M = Meet NM = Not Meet NA = Not Applicable R = Refer to Comment Section

STANDARD CONSUMER SAFETY SPECIFICATION FOR BUNK BEDS (ASTM F1427-21e1)

Section	Requirement	Result
4	Performance Requirements	
4.1	Vertical Protrusions	-
4.1.1	Vertical protrusions along the top inside surface	M
4.1.2	Cap used along the top surface of upper bunk	NA
4.2	Fit of Top Bed to Bottom Bed	NA
4.3	Mattress and Foundation Size and Fit (Top Bed)	M
4.4	Mattress Size and Fit (Lower Foundation)	M
4.5	Upper and Lower Foundation Support Systems	-
4.5.1	Horizontal position of the mattress and the foundation	M
4.5.2	Utilized event cross-members	M
4.5.3	Release of positive fastening devices or use of hand tools	M
4.5.4	Static load for the foundation support system	M
4.6	Side Rails	-
4.6.1	Bolt-On Side Rails	M
4.6.2	Hook-On Side Rails	NA
4.6.3	Side rail attachments	M
4.7	Guardrails	-
4.7.1	Presence of guardrails	M
4.7.2	Requirement of attachment	M
4.7.3	Requirement of height of the upper edge above the sleeping surface	M
4.7.4	Opening of the guardrail	M
4.7.5	Opening between the either end of the guardrail and the bed end structure	M
4.8	Bed Structure	-
4.8.1	The upper edge of the upper bunk end structures	M
4.8.2	Openings in the rigid end structures of the upper bunk	M
4.8.3	Openings in the end structures of the lower bunk	M
4.8.4	Neck entrapment requirement of all portions of the boundary of any opening of the lower bunk end structure	M
4.9	Ladders	-
4.9.1	Presence of ladder	M
4.9.2	Dimension requirement of ladder	M
4.9.3	Openings between ladder step and upper bunk boundary	M
4.9.4	Gaps between edge of mattress and interior vertical stile	M
4.10	Metal beds: frame and fastenings	NA
6	Marking and Labeling	NT
7	Instructional Literature	NT

M = Meet NM = Not Meet NA = Not Applicable NR = Not Required R = Refer to Comment Section

CARTON PHOTO

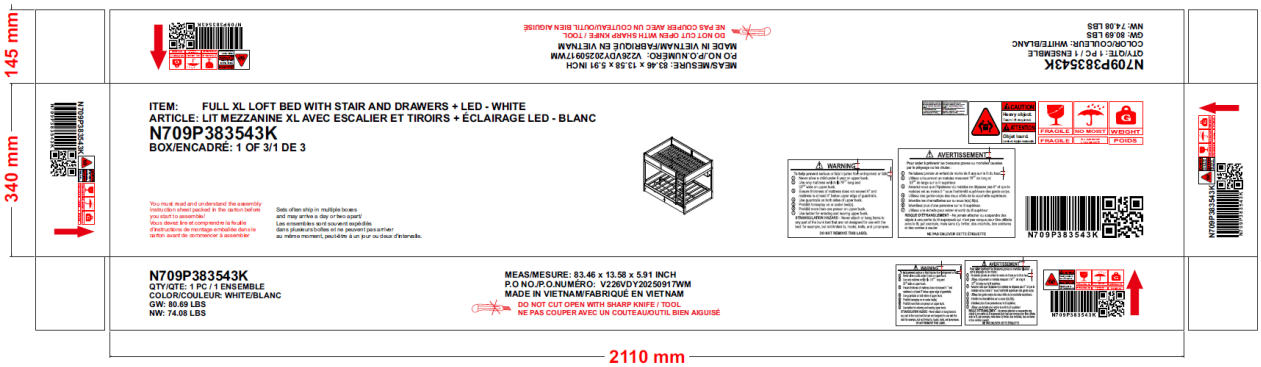

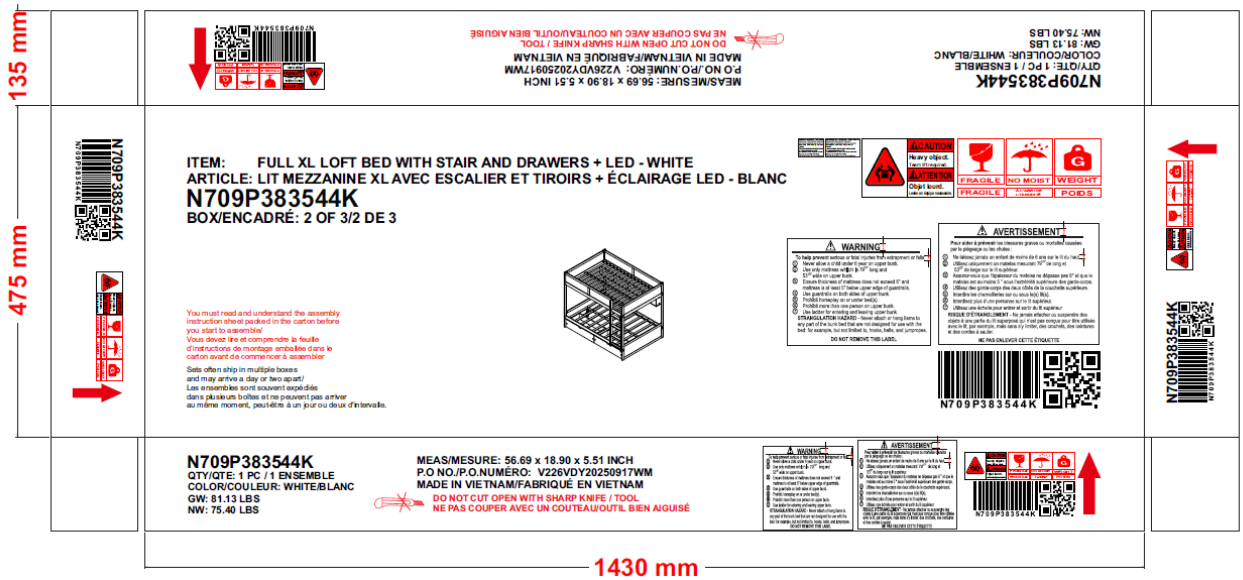

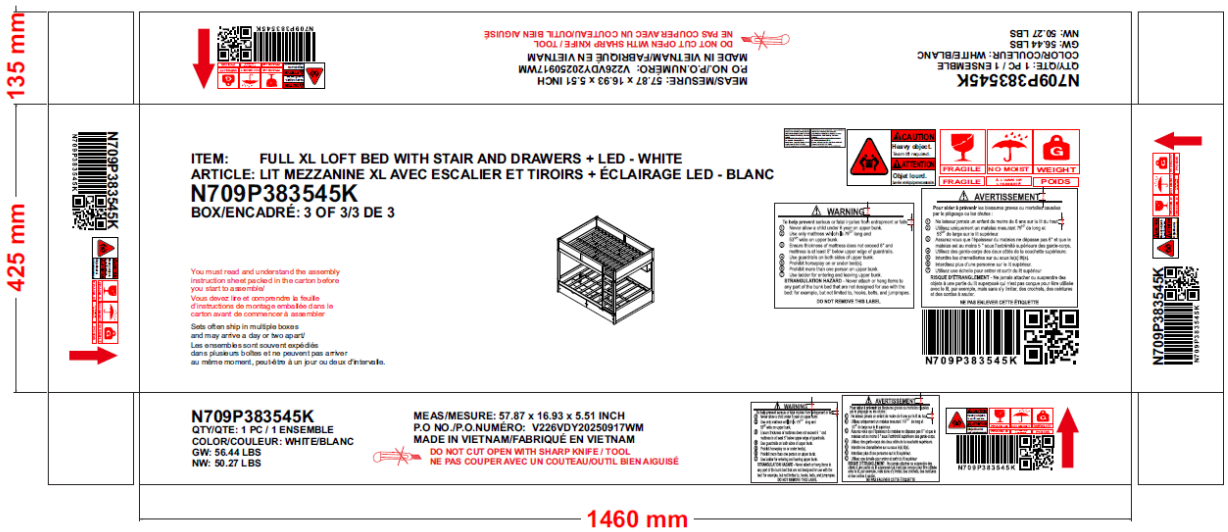

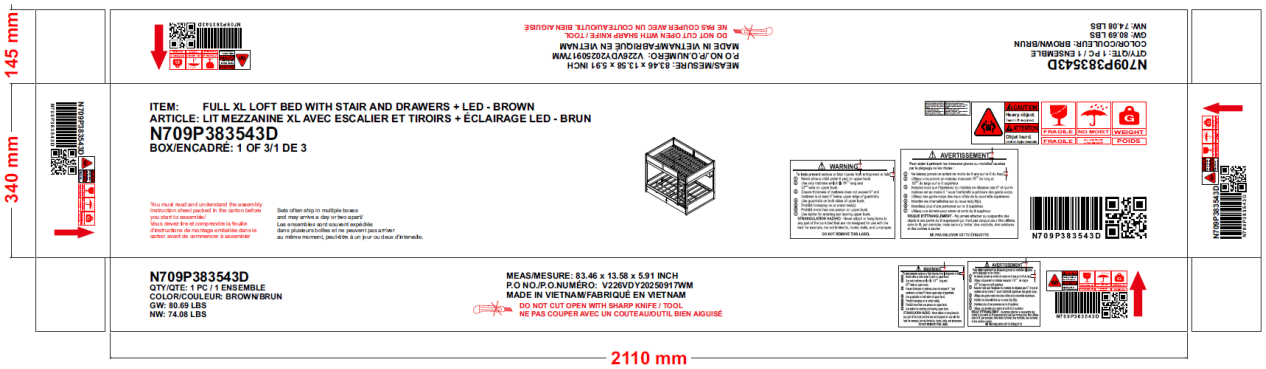
145 mm
340 mm
2110 mm
ITEM: FULL XL LOFT BED WITH STAIR AND DRAWERS + LED - BROWN
ARTICLE: LIT MEZZANINE XL AVEC ESCALIER ET TIROIRS + ÉCLAIRAGE LED - BRUN
N709P383543D
BOX/ENCADRÉ: 1 OF 3/1 DE 3
N709P383543D
QTY/QTE: 1 PC / 1 ENSEMBLE
COLOR/COULEUR: BROWN/BRUN
GW: 80.69 LBS
NW: 74.08 LBS
MEAS/MESURE: 83.46 x 13.58 x 5.91 INCH
P.O NO./P.O.NUMÉRO: V226VDY20250917WM
MADE IN VIETNAM/FABRIQUÉ EN VIETNAM
DO NOT CUT OPEN WITH SHARP KNIFE / TOOL
NE PAS COUPER AVEC UN COUTEAU/OUTIL BIEN AIGUISÉ

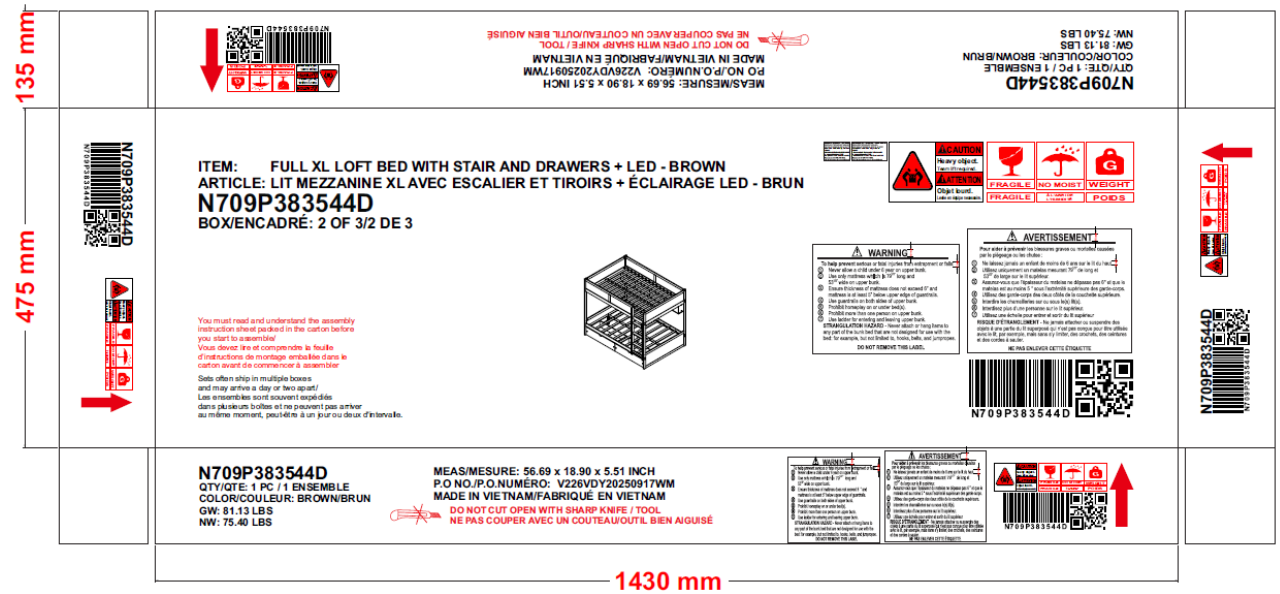
135 mm
475 mm
1430 mm
ITEM: FULL XL LOFT BED WITH STAIR AND DRAWERS + LED - BROWN
ARTICLE: LIT MEZZANINE XL AVEC ESCALIER ET TIROIRS + ÉCLAIRAGE LED - BRUN
N709P383544D
BOX/ENCADRÉ: 2 OF 3/2 DE 3
N709P383544D
QTY/QTE: 1 PC / 1 ENSEMBLE
COLOR/COULEUR: BROWN/BRUN
GW: 81.13 LBS
NW: 75.40 LBS
MEAS/MESURE: 56.69 x 18.90 x 5.51 INCH
P.O NO./P.O.NUMÉRO: V226VDY20250917WM
MADE IN VIETNAM/FABRIQUÉ EN VIETNAM
DO NOT CUT OPEN WITH SHARP KNIFE / TOOL
NE PAS COUPER AVEC UN COUTEAU/OUTIL BIEN AIGUISÉ

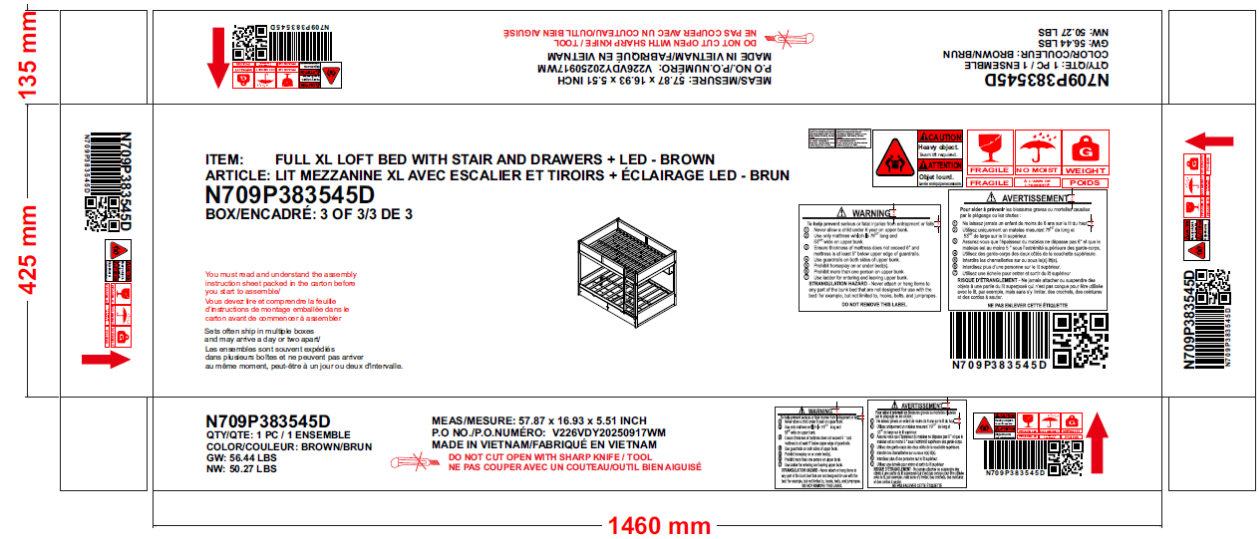
135 mm
425 mm
1460 mm
ITEM: FULL XL LOFT BED WITH STAIR AND DRAWERS + LED - BROWN
ARTICLE: LIT MEZZANINE XL AVEC ESCALIER ET TIROIRS + ÉCLAIRAGE LED - BRUN
N709P383545D
BOX/ENCADRÉ: 3 OF 3/3 DE 3
N709P383545D
QTY/QTE: 1 PC / 1 ENSEMBLE
COLOR/COULEUR: BROWN/BRUN
GW: 56.44 LBS
NW: 50.27 LBS
MEAS/MESURE: 57.87 x 16.93 x 5.51 INCH
P.O NO./P.O.NUMÉRO: V226VDY20250917WM
MADE IN VIETNAM/FABRIQUÉ EN VIETNAM
DO NOT CUT OPEN WITH SHARP KNIFE / TOOL
NE PAS COUPER AVEC UN COUTEAU/OUTIL BIEN AIGUISÉ

LABELS ON PRODUCT

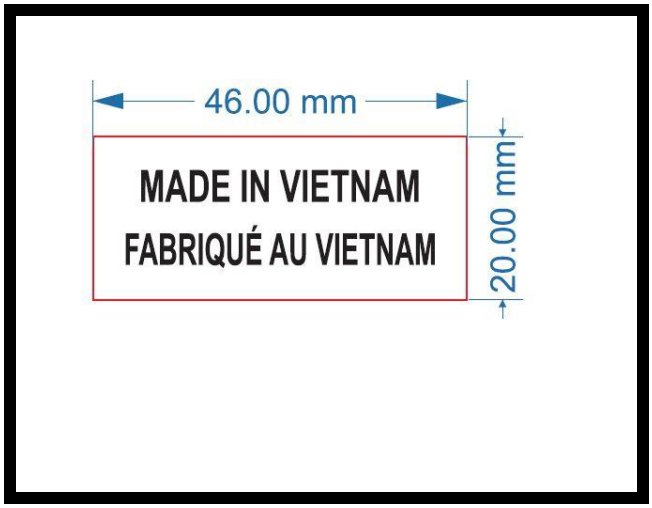

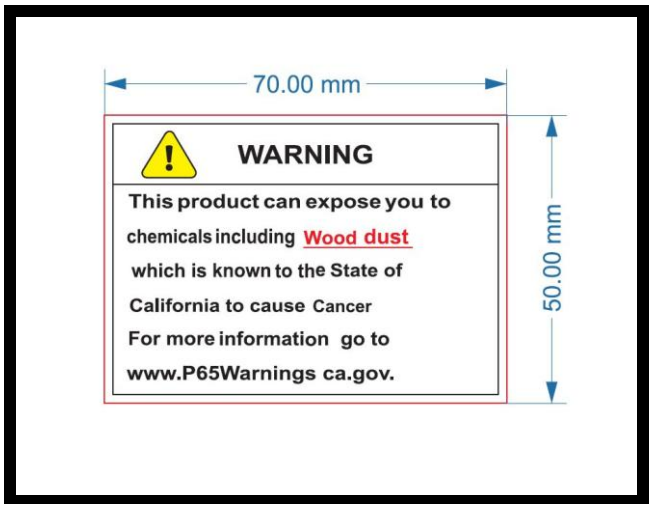

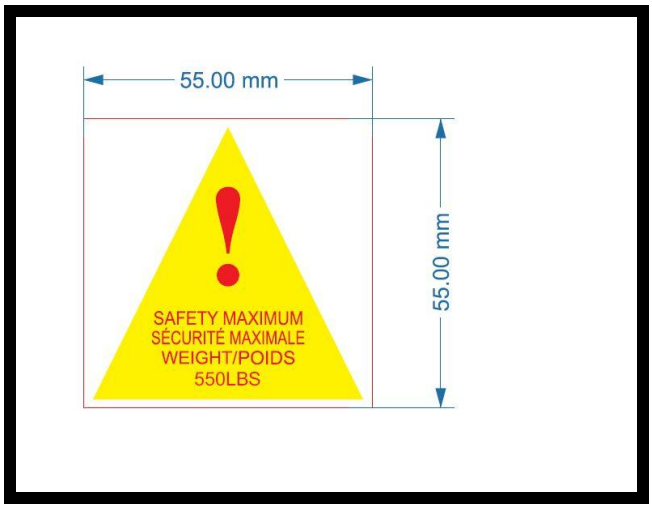

TRACKING LABEL

WARNING LABEL

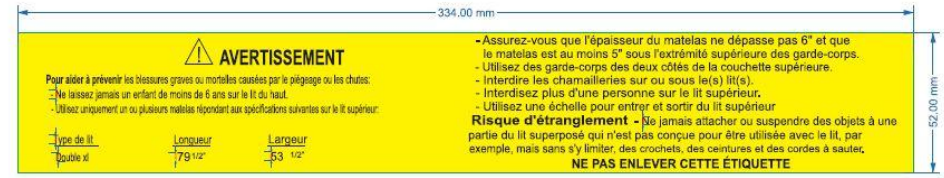

WHITE COLOR

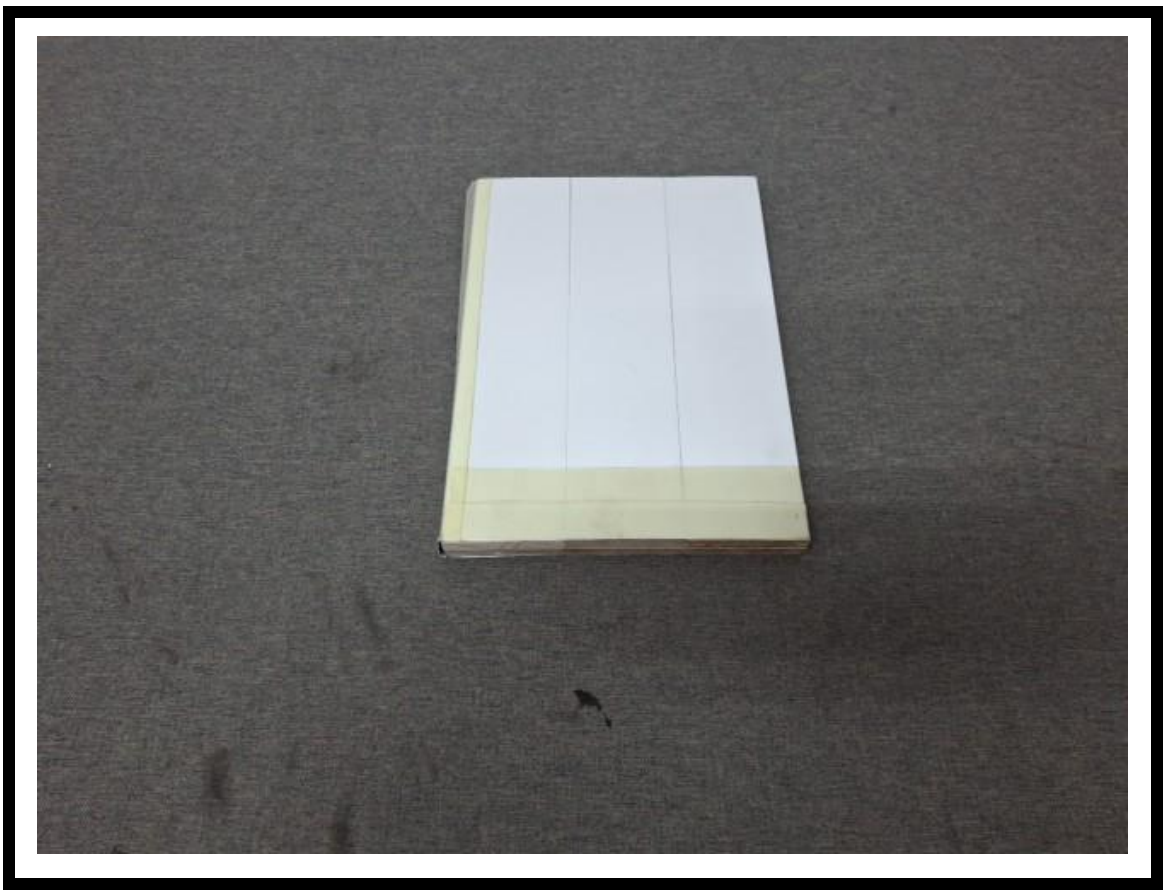

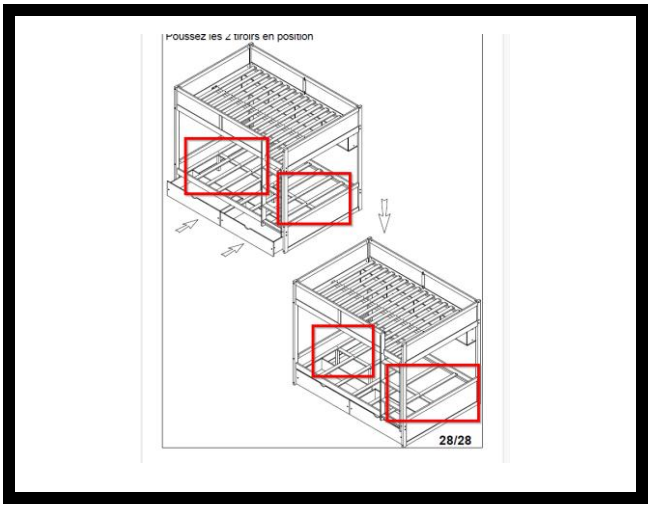

FIGURE 1 – ASSEMBLY INSTRUCTION

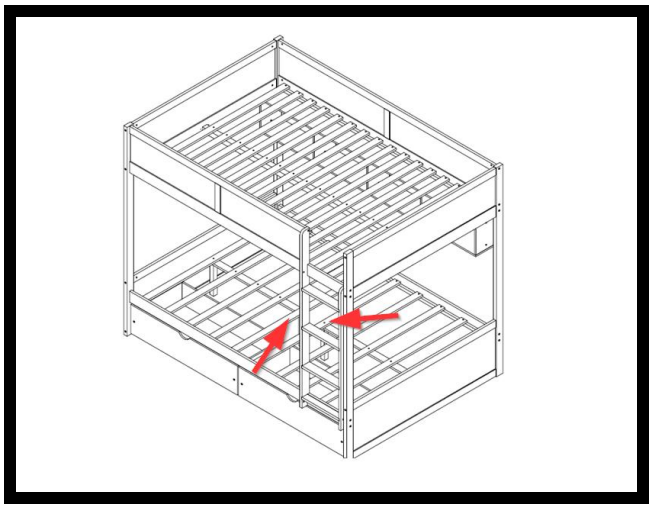

FIGURE 2 CARTON

FIGURE 3 – PRODUCT