Technical Report: **96252730297** OCTOBER 02, 2025
Date Received: SEPTEMBER 30, 2025

DAI VIET CO., LTD
NO. 276/19/13 TRAN HUNG DAO STREET, DONG B QUARTER, DONG HOA WARD, HO CHI MINH CITY, VIET NAM

Sample Description:	FULL OVER TWIN LOFT BED WITH TRUNDLE		
Vendor:	DAI VIET CO., LTD	Sample Size:	/
Manufacturer:	DAI VIET CO., LTD	VPN:	/
Buyer:	GIGACLOUD	SKN/SKU No.:	N709P370515/N709P370516/ N709P370517
Agent:	/		/
Labeled Age Grade:	/	PO No.:	V694VDY20250818WM
Appropriate Age Grade:	/	Ref #:	/
Client Specified Age Grade:	/	Country of Origin:	VIETNAM
Tested Age Grade:	/	Assortment No.:	/
UPC Code:	/	Department No.:	/
Phase of Production:	/	Item#:	/
Color:	WHITE + GREY	Date of Production:	/
Program:	/	Model/Style#:	/
Previous No:	96252550345	Country of Destination:	USA

TEST PROPERTY	PASS	FAIL	DATA	N/A	Remark
CPSIA Total lead content in Surface Coating	X				
CPSIA Total Lead Content In Substrate Materials	X				
15 U.S.C 1278a Total Lead Content	X				
16 CFR 1213 Bunk Beds	X				
16 CFR 1513 Requirements for Bunk Beds	X				
ASTM F1427-21e1 Bunk Beds	X				

Note(s):

- The Chemical test following reports listed:

No.	Tested component:	Chemical test	Reference report	Report issued date
(1)	White Coating/ Wood	Lead	96251320694	MAY 16, 2025
(2)	Grey Coating/ Wood		96251610225	SEP 13, 2025

- This report includes the test result(s) which was conducted & reviewed by Analytical department.
- Recommend to revise the photo of sample on carton to match with actual sample (Please see figure 1)
- Recommend to revise the tracking label to split the model for each color instead of combining all in one (Please see figure 2)

Bureau Veritas
Consumer Products Services (VN) Ltd.
Lot C7-C9, Conurbation 2, Cat Lai Industrial Zone, Thanh My Loi Ward, Thu Duc City, HCMC, Vietnam
Tel: 84-028-37421604~6 Fax: 84-028-37421603
website:www.bureauveritas.com/cps

This report is governed by, and incorporates by reference, the Conditions of Testing as posted at the date of issuance of this report at http://www.bureauveritas.com/home/about-us/our-business/cps/about-us/terms-conditions/ and is intended for your exclusive use. Any copying or replication of this report to or for any other person or entity, or use of our name or trademark, is permitted only with our prior written permission. This report sets forth our findings solely with respect to the test samples identified herein. The results set forth in this report are not indicative or representative of the quality or characteristics of the lot from which a test sample was taken or any similar or identical product unless specifically and expressly noted. Our report includes all of the tests requested by you and the results thereof based upon the information that you provided to us. Measurement uncertainty is only provided upon request for accredited tests. Statements of conformity are based on simple acceptance criteria without taking measurement uncertainty into account, unless otherwise requested in writing. You have 60 days from date of issuance of this report to notify us of any material error or omission caused by our negligence or if you require measurement uncertainty; provided, however, that such notice shall be in writing and shall specifically address the issue you wish to raise. A failure to raise such issue within the prescribed time shall constitute your unqualified acceptance of the completeness of this report, the tests conducted and the correctness of the report contents.

If there is any question regarding this report, please contact the following lab personnel:

Administrative inquiries, please contact:
Primary Contact: Elise Vo, Tel: 84-028-37421-604 ~ 6, Ext: 394; email: elise.vo@bureauveritas.com
Back-up Contact: Cynthia Vuong, Tel: 848-37421-604 ~ 6, Ext: 641; email: cynthia.vuong@bureauveritas.com

Technical inquiries, please contact:
Primary Contact: Terry Nguyen, Tel: 84-028-37421-604 ~ 6, Ext: 355; email: terry.nguyen@bureauveritas.com
Back-up Contact: Louis Tran, Tel: 84-028-37421-604 ~ 6, Ext: 339; email: louis.tran@bureauveritas.com

BUREAU VERITAS CONSUMER PRODUCTS SERVICES (VN) LTD.

TERRY NGUYEN
LAB MANAGER – HARDLINE, TOYS & JUVENILE PRODUCTS DIVISION

SAMPLE DESCRIPTION ASSIGNED BY LABORATORY

Test Item(s)	Sample description/ Location	Material	Style(s)
I001	Yellow/ Black Overlapping Coating (Warning Label)	Coating	-
I002	Black Coating (Tracking Label)	Coating	-
I003	Yellow/ Red Coating (Maximum Weight Label)	Coating	-
I004	Black/ Red/ Yellow Coating (CA Prop 65 Label)	Coating	-
I005	Black/ White Overlapping Coating (Country Origin Label)	Coating	-
I006	No Coating (Hardware)	-	-
I007	Brown MDF Wood (Wood)	Wood	-
I008	Light Brown Plywood (Wood)	Wood	-
I009	Silver Metal (Bolt)	Metal	-
I010	Silver Metal (Sheet Screw)	Metal	-
I011	Silver Metal (Barrel Nut)	Metal	-
I012	Silver Metal (L Bracket On Stair)	Metal	-
I013	Silver Metal (L Bracket On Trundle Bed)	Metal	-
I014	Silver Metal (Cap Nut)	Metal	-
I015	Silver Metal (I Bracket)	Metal	-
I016	Yellow Metal (Round Head Screw)	Metal	-
I017	Yellow Metal (Flat Head Screw)	Metal	-
I018	Silver Metal (Frame Of Caster)	Metal	-
I019	Silver Plastic With Black Print & Glue (Label Of Outlet)	Soft Plastic / Glue	-
I020	Silver Metal (Rivet Of Caster)	Metal	-
I021	White Plastic (Caster)	Hard Plastic	-
I022	Black Plastic (Plug)	Soft Plastic	-
I023	Black Plastic (Cord)	Soft Plastic	-
I024	Black Plastic (Holder Of Outlet)	Hard Plastic	-
I025	Black Plastic (Outlet)	Hard Plastic	-
I026	Silver Plastic With Black Print & Glue (Label Of Plug)	Soft Plastic/ Glue	-
I027	Transparent Plastic With White Paper & Black Print (Manufacturer Label)	Soft Plastic	-
I028	Black Plastic (Plug)	Hard Plastic	-
I029	Black Plastic (Cable Connect Plug/ Cable Connect Led)	Soft Plastic	-
I030	Black Plastic (Cord)	Soft Plastic	-
I031	Black Plastic With White Print (Wrap Cord)	Soft Plastic	-
I032	Transparent Plastic (Cover Electric Led)	Soft Plastic	-
I033	No Coating (All Electric Component)	-	-

TEST RESULT

Total Lead Content in Surface Coating:
- United States Consumer Product Safety Improvement Act (CPSIA) of 2008, Section 101(a)(2) / United States Code of Federal Regulations (CFR), Title 16, Part 1303

Test Method: U. S. CPSC-CH-E1003-09.1 (February 25, 2011).

Maximum Allowable Limit :	**90 mg/kg**

-	**Unit**	**Result**		
Test Item(s)	-	I001+I002+I003	I004+I005	I006
Parameter	-	-	-	-
Total Lead (Pb)	mg/kg	ND	ND	-
Conclusion	-	PASS	PASS	NA

-	**Unit**	**Result**
Test Item(s)	-	I033
Parameter	-	-
Total Lead (Pb)	mg/kg	-
Conclusion	-	NA

Note / Key :

ND = Not detected NA = Not applicable “>” = Greater than
mg/kg = milligram(s) per kilogram = ppm = part(s) per million
Reporting Limit (mg/kg) : 10

Remark :

- Component(s) in Test Item(s) may not able to be tested individually due to overlapping.

TEST RESULT

Total Lead Content in Substrate:
- United States Consumer Product Safety Improvement Act (CPSIA) Section 101(a)(2)

Test Method: U. S. CPSC Test Method CPSC-CH-E1001-08.3 (November 15, 2012) or U. S. CPSC Test Method CPSC-CH-E1002-08.3 (November 15, 2012).

Maximum Allowable Limit :	**100 mg/kg**

-	**Unit**	**Result**	
Test Item(s)	-	I007+I008	I019+I021+I022
Parameter	-	-	-
Total Lead (Pb)	mg/kg	ND	ND
Conclusion	-	PASS	PASS

-	**Unit**	**Result**				
Test Item(s)	-	I023+I024+I025	I009	I010	I011	I012
Parameter	-	-	-	-	-	-
Total Lead (Pb)	mg/kg	ND	ND	ND	ND	ND
Conclusion	-	PASS	PASS	PASS	PASS	PASS

-	**Unit**	**Result**						
Test Item(s)	-	I013	I014	I015	I016	I017	I018	I020
Parameter	-	-	-	-	-	-	-	-
Total Lead (Pb)	mg/kg	ND	ND	ND	ND	ND	ND	ND
Conclusion	-	PASS	PASS	PASS	PASS	PASS	PASS	PASS

-	**Unit**	**Result**		
Test Item(s)	-	I026+I027+I028	I029+I030	I031+I032
Parameter	-	-	-	-
Total Lead (Pb)	mg/kg	ND	ND	ND
Conclusion	-	PASS	PASS	PASS

Note / Key :

ND = Not detected NA = Not applicable “>” = Greater than
mg/kg = milligram(s) per kilogram = ppm = part(s) per million
Reporting Limit (mg/kg) : 10

Remark :

- According to Children’s Products Containing Lead; Exemptions for Certain Electronic Devices; Final Rule, exemption were granted to steel alloy containing up to 0.35 % lead by weight, aluminum containing up to 0.4 % lead by weight and copper-based alloy containing up to 4 % lead by weight.
- According to Petition Requesting Exception from Lead Content Limits; Notice Granting Exception, exemption was granted to certain aluminum alloy on certain ride-on children`s products containing up to 0.03 % lead weight.

TEST RESULT

Total Lead Content:
15 U.S.C 1278a-Children Product Containing Lead

Maximum Allowable Limit :	**100 mg/kg**

-	**Unit**	**Result**		
Test Item(s)	-	I001+I002+I003	I004+I005	I006
Parameter	-	-	-	-
Total Lead (Pb)	mg/kg	ND	ND	-
Conclusion	-	PASS	PASS	NA

-	**Unit**	**Result**	
Test Item(s)	-	I007+I008	I019+I021+I022
Parameter	-	-	-
Total Lead (Pb)	mg/kg	ND	ND
Conclusion	-	PASS	PASS

-	**Unit**	**Result**				
Test Item(s)	-	I023+I024+I025	I009	I010	I011	I012
Parameter	-	-	-	-	-	-
Total Lead (Pb)	mg/kg	ND	ND	ND	ND	ND
Conclusion	-	PASS	PASS	PASS	PASS	PASS

-	**Unit**	**Result**						
Test Item(s)	-	I013	I014	I015	I016	I017	I018	I020
Parameter	-	-	-	-	-	-	-	-
Total Lead (Pb)	mg/kg	ND	ND	ND	ND	ND	ND	ND
Conclusion	-	PASS	PASS	PASS	PASS	PASS	PASS	PASS

-	**Unit**	**Result**			
Test Item(s)	-	I026+I027+I028	I029+I030	I031+I032	I033
Parameter	-	-	-	-	-
Total Lead (Pb)	mg/kg	ND	ND	ND	-
Conclusion	-	PASS	PASS	PASS	NA

Note / Key :

ND = Not detected NA = Not applicable “>” = Greater than
mg/kg = milligram(s) per kilogram = ppm = part(s) per million 10000 mg/kg = 1 % % = percent
Reporting Limit (mg/kg) : 10

Remark :

- Tested per client’s request

RESULT(S):

REQUIREMENTS FOR BUNK BEDS (FHSA, Title 16, CFR, Part 1213 & 1513)

Section	Description	Results
1213.3 1513.3	Requirements	
1213.3(a) 1513.3(a)	Guardrails	
1213.3(a)(1) 1513.3(a)(1)	Two guardrails required if bed is > 30 inches from ground	M
1213.3(a)(2) 1513.3(a)(2)	One guardrail shall be continuous	M
1213.3(a)(3) 1513.3(a)(3)	No greater than 15 inches between either end	M
1213.3(a)(4) 1513.3(a)(4)	Bunk Beds with ladder, continuous guardrail on other side	M
1213.3(a)(5) 1513.3(a)(5)	Guardrails attached so they cannot be removed without releasing a device	M
1213.3(a)(6) 1513.3(a)(6)	The upper edge shall be no less than 5 inches above top surface	M
1213.3(a)(7) 1513.3(a)(7)	No openings in the structure between lower edge and underside	M
1213.3(b) 1513.3(b)	Bed End Structures	
1213.3(b)(1) 1513.3(b)(1)	The upper edge of end structure shall be at least 5 inches above mattress	M
1213.3(b)(2) 1513.3(b)(2)	No openings in the structure above foundation of the upper bunk that permits passage of the wedge block	M
1213.3(b)(3) 1513.3(b)(3)	Tested in accordance with Section 1213.4(c)	M
1213.3(b)(4) 1513.3(b)(4)	Neck entrapment requirements of Section 1213.4(c)(3)	M
1213.5 1513.5	Marking and Labeling	
1213.5(a) 1513.5(a)	Permanent label with name and address, model # and date code	M
1213.5(b) 1513.5(b)	Permanent Warning Label placement	M
1213.6 1513.6	Instructions	
1213.6(a) 1513.6(a)	Size of mattress and foundation	M
1213.6(b) 1513.6(b)	Safety Warning	-
1213.6(b)(1) 1513.6(b)(1)	Do not allow children under 6 years of age to use the upper bunk	M

REQUIREMENTS FOR BUNK BEDS (FHSA, Title 16, CFR, Part 1213 & 1513)

Section	Description	Results
1213.6(b)(2) 1513.6(b)(2)	Use guardrails on both sides of the upper bunk	M
1213.6(b)(3) 1513.6(b)(3)	Prohibit horseplay on or under beds	M
1213.6(b)(4) 1513.6(b)(4)	Prohibit more than one person on upper bunk	M
1213.6(b)(5) 1513.6(b)(5)	Use ladder for entering or leaving upper bunk	M
1213.6(b)(6) 1513.6(b)(6)	If the bed is placed against a wall, use full length guardrail along wall	M

M = Meet NM = Not Meet NA = Not Applicable R = Refer to Comment Section

RESULT(S):

STANDARD CONSUMER SAFETY SPECIFICATION FOR BUNK BEDS (ASTM F1427-21e1)

Section	Requirement	Result
4	Performance Requirements	
4.1	Vertical Protrusions	-
4.1.1	Vertical protrusions along the top inside surface	M
4.1.2	Cap used along the top surface of upper bunk	NA
4.2	Fit of Top Bed to Bottom Bed	NA
4.3	Mattress and Foundation Size and Fit (Top Bed)	M
4.4	Mattress Size and Fit (Lower Foundation)	NA
4.5	Upper and Lower Foundation Support Systems	-
4.5.1	Horizontal position of the mattress and the foundation	M
4.5.2	Utilized event cross-members	M
4.5.3	Release of positive fastening devices or use of hand tools	M
4.5.4	Static load for the foundation support system	M
4.6	Side Rails	-
4.6.1	Bolt-On Side Rails	M
4.6.2	Hook-On Side Rails	NA
4.6.3	Side rail attachments	M
4.7	Guardrails	-
4.7.1	Presence of guardrails	M
4.7.2	Requirement of attachment	M
4.7.3	Requirement of height of the upper edge above the sleeping surface	M
4.7.4	Opening of the guardrail	M
4.7.5	Opening between the either end of the guardrail and the bed end structure	M
4.8	Bed Structure	-
4.8.1	The upper edge of the upper bunk end structures	M
4.8.2	Openings in the rigid end structures of the upper bunk	M
4.8.3	Openings in the end structures of the lower bunk	M
4.8.4	Neck entrapment requirement of all portions of the boundary of any opening of the lower bunk end structure	M
4.9	Ladders	-
4.9.1	Presence of ladder	M
4.9.2	Dimension requirement of ladder	M
4.9.3	Openings between ladder step and upper bunk boundary	M
4.9.4	Gaps between edge of mattress and interior vertical stile	M
4.10	Metal beds: frame and fastenings	NA
6	Marking and Labeling	M
7	Instructional Literature	M

M = Meet NM = Not Meet NA = Not Applicable R = Refer to Comment Section

GREY COLOR

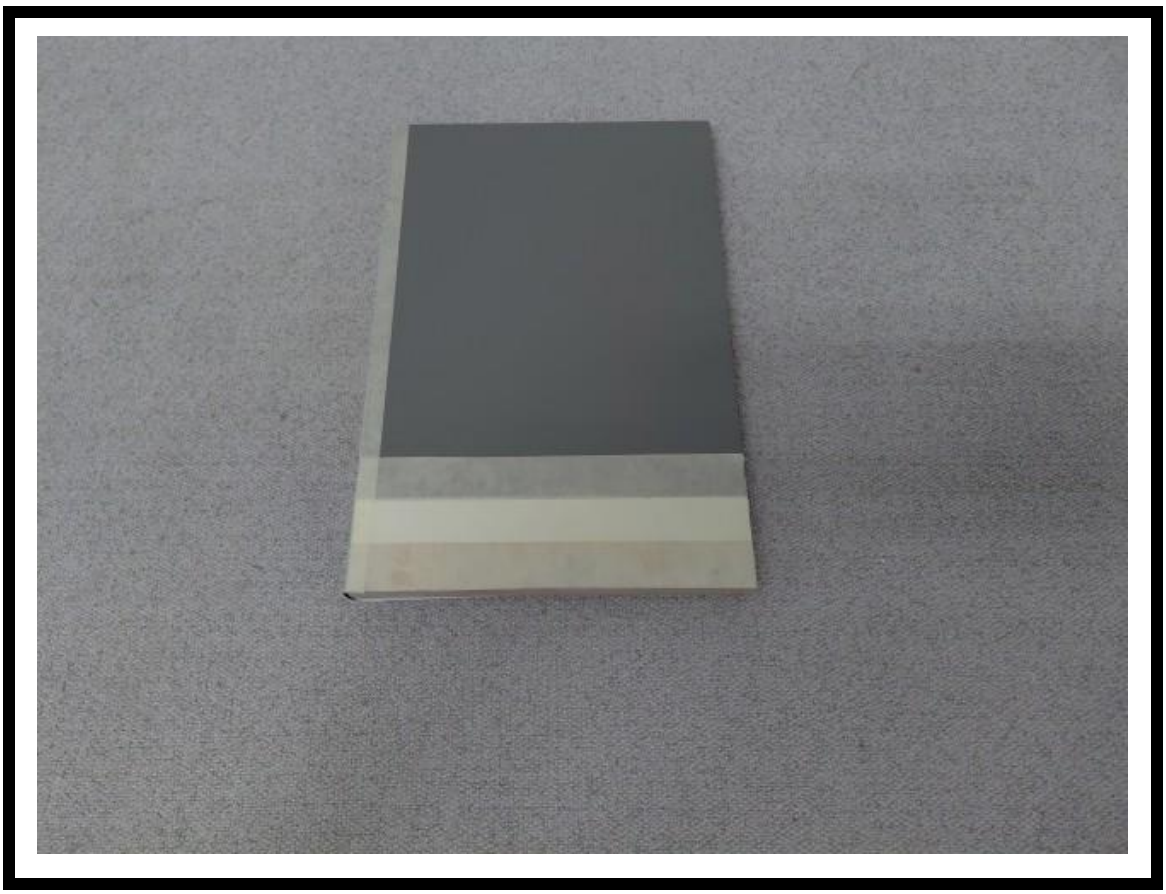

WHITE COLOR

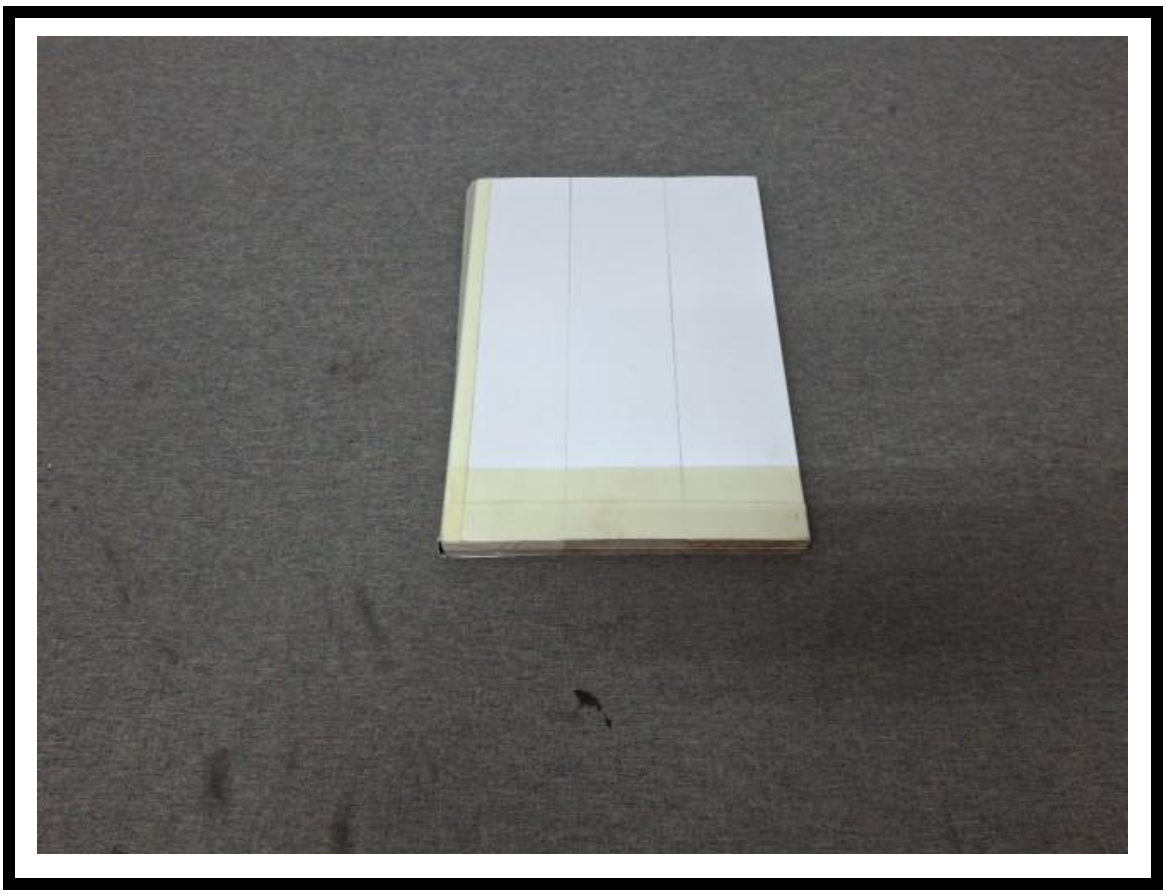

CARTON LAYOUT

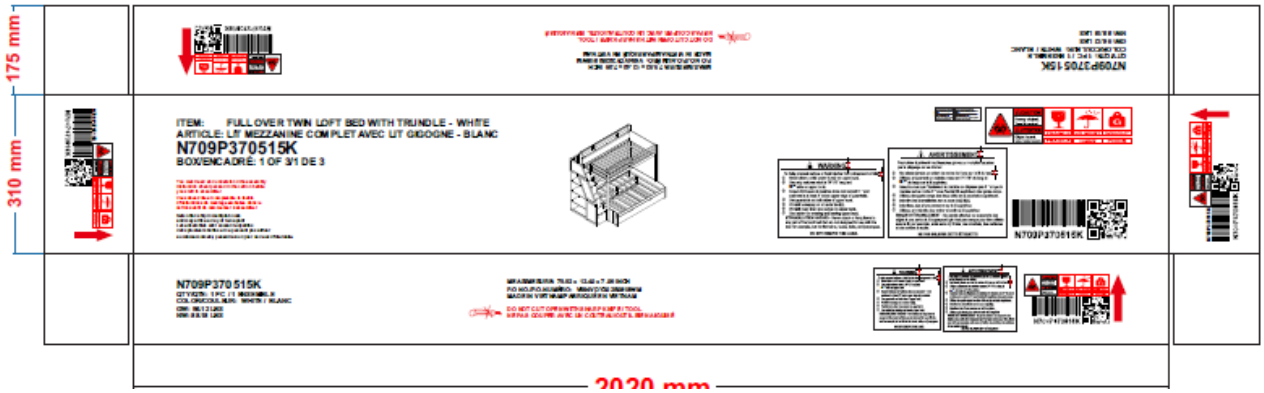

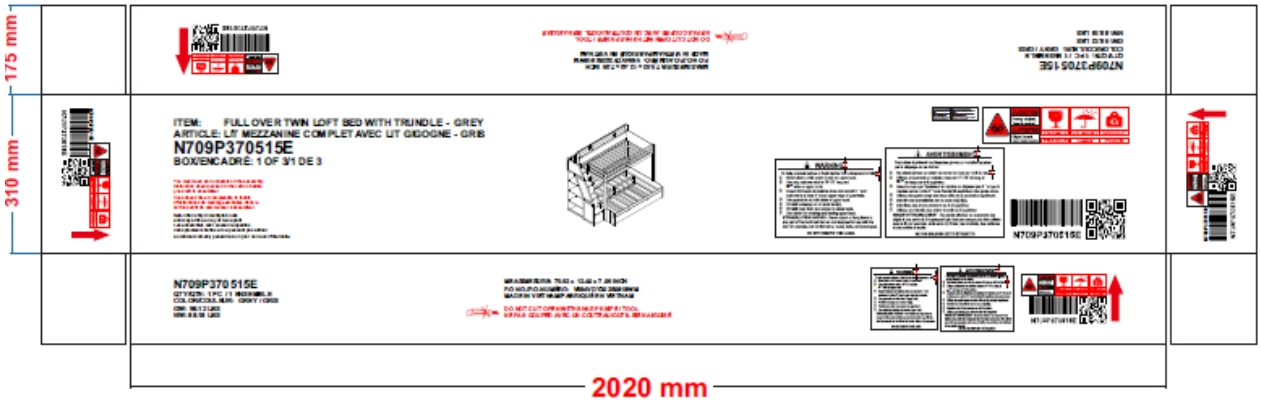

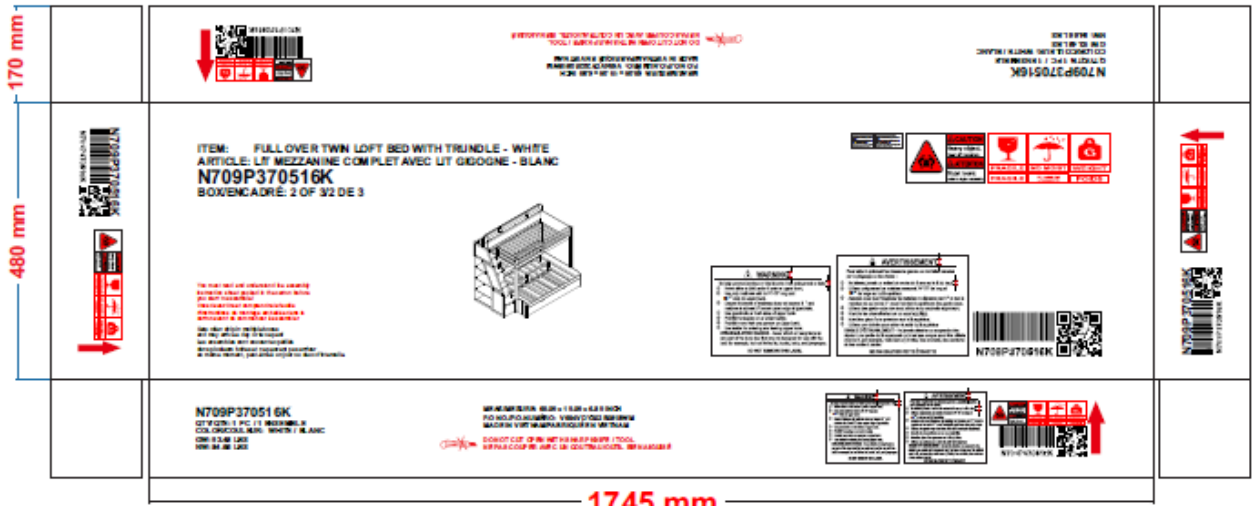
170 mm
480 mm
ITEM: FULL OVER TWIN LOFT BED WITH TRUNDLE - WHITE
ARTICLE: LIT MEZZANINE COMPLET AVEC LIT GIGOGNE - BLANC
N709P370516K
BOX/ENCADRÉ: 2 OF 3/2 DE 3
N709P370516K
1745 mm

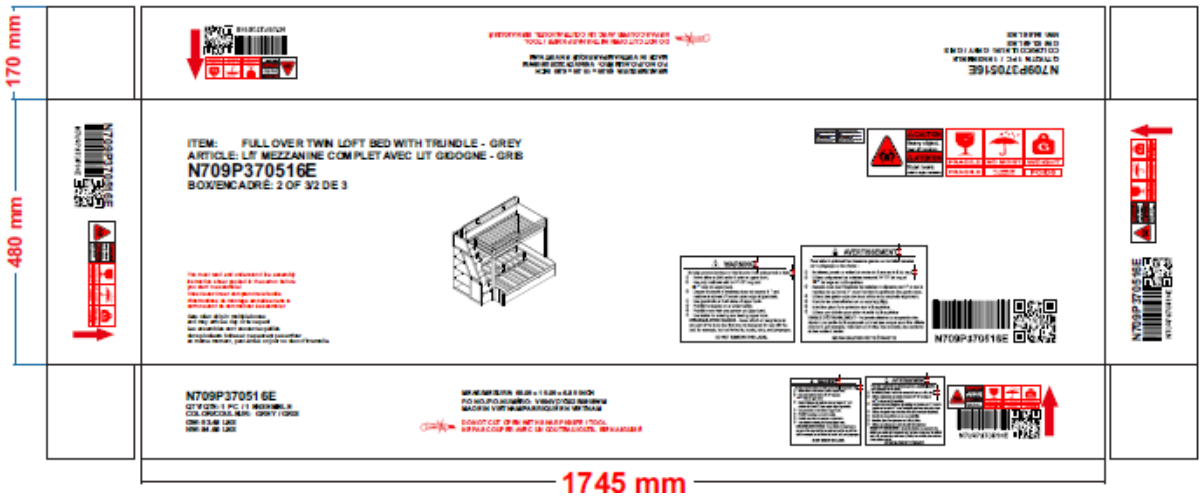
170 mm
480 mm
ITEM: FULL OVER TWIN LOFT BED WITH TRUNDLE - GREY
ARTICLE: LIT MEZZANINE COMPLET AVEC LIT GIGOGNE - GRIS
N709P370516E
BOX/ENCADRÉ: 2 OF 3/2 DE 3
N709P370516E
1745 mm

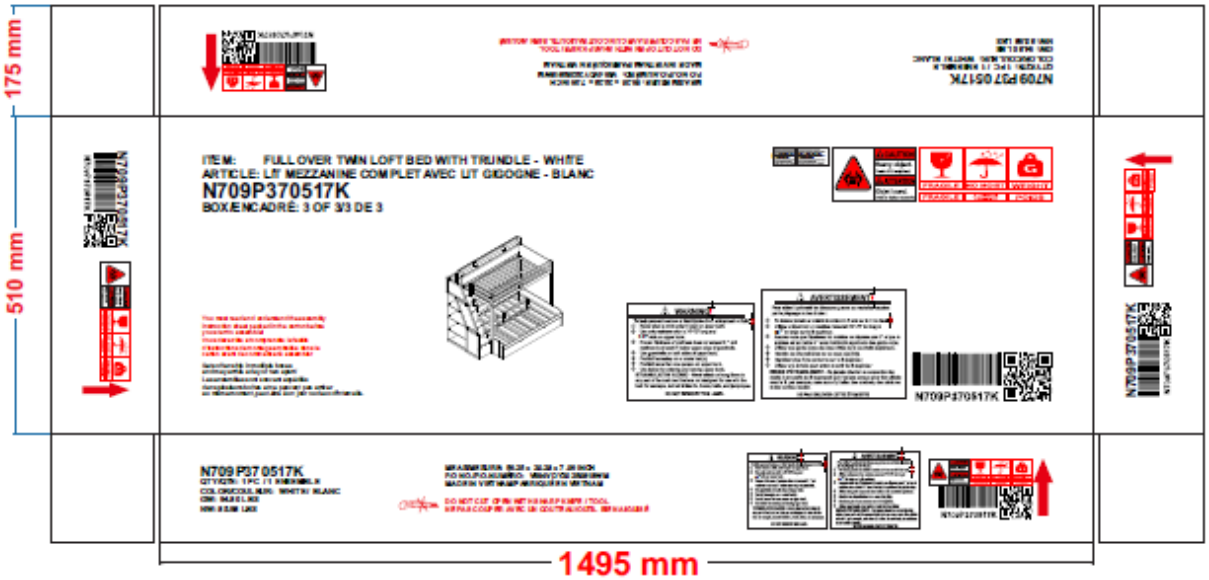
175 mm
510 mm
ITEM: FULL OVER TWIN LOFT BED WITH TRUNDLE - WHITE
ARTICLE: LIT MEZZANINE COMPLET AVEC LIT GIGOGNE - BLANC
N709P370517K
BOX/ENCADRÉ: 3 OF 3/3 DE 3
N709P370517K
1495 mm

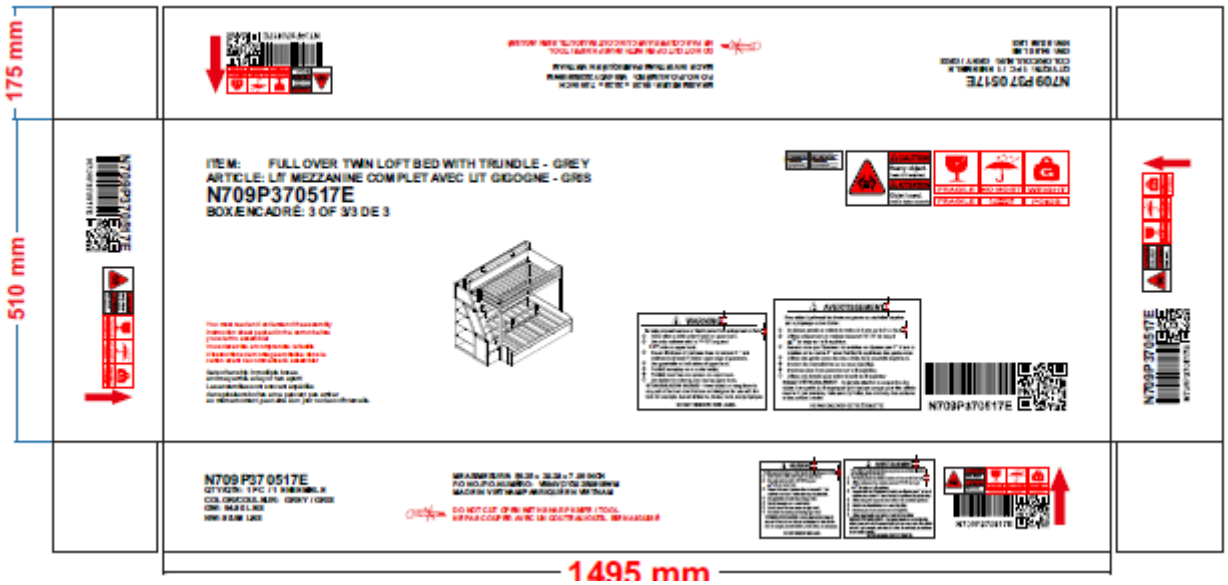
175 mm
510 mm
ITEM: FULL OVER TWIN LOFT BED WITH TRUNDLE - GREY
ARTICLE: LIT MEZZANINE COMPLET AVEC LIT GIGOGNE - GRIS
N709P370517E
BOX/ENCADRÉ: 3 OF 3/3 DE 3
N709P370517E
1495 mm

LABELS ON PRODUCT

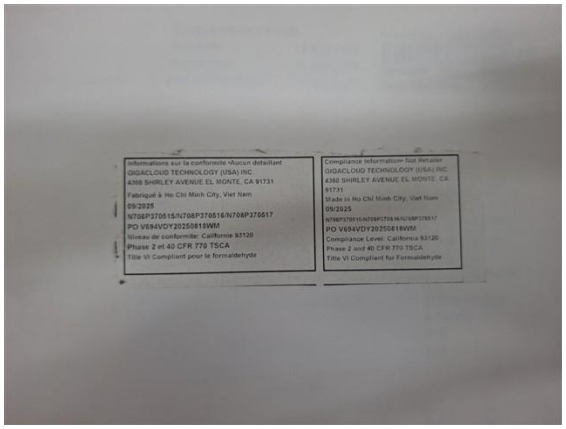

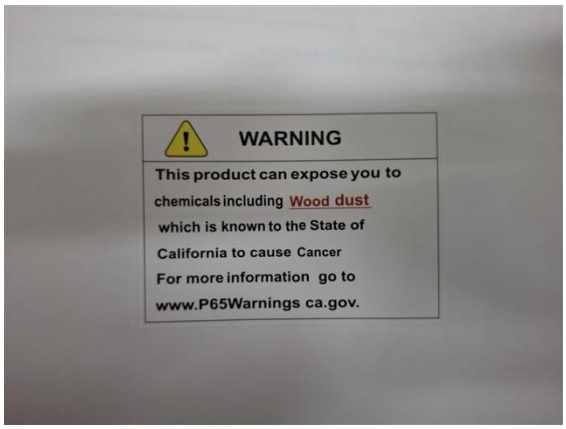

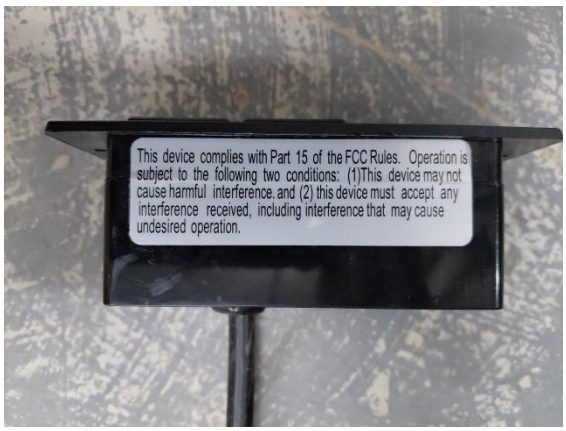

WARNING LABEL

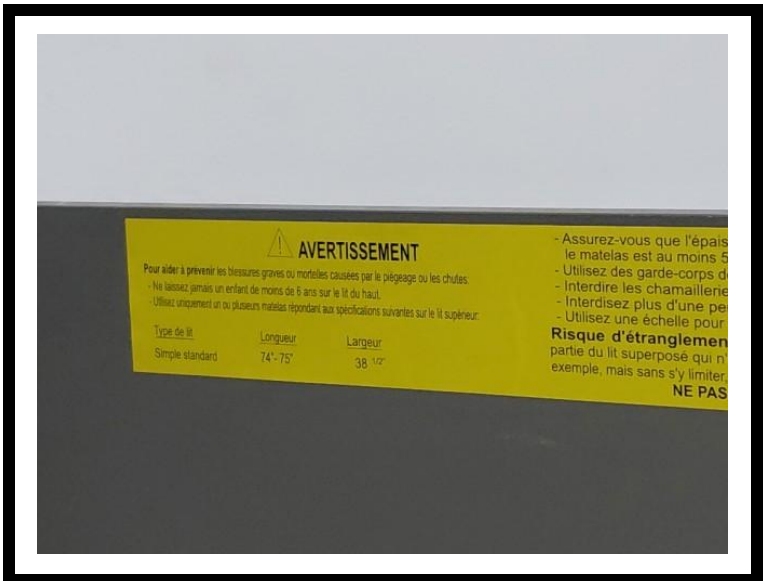

WARNING LABEL

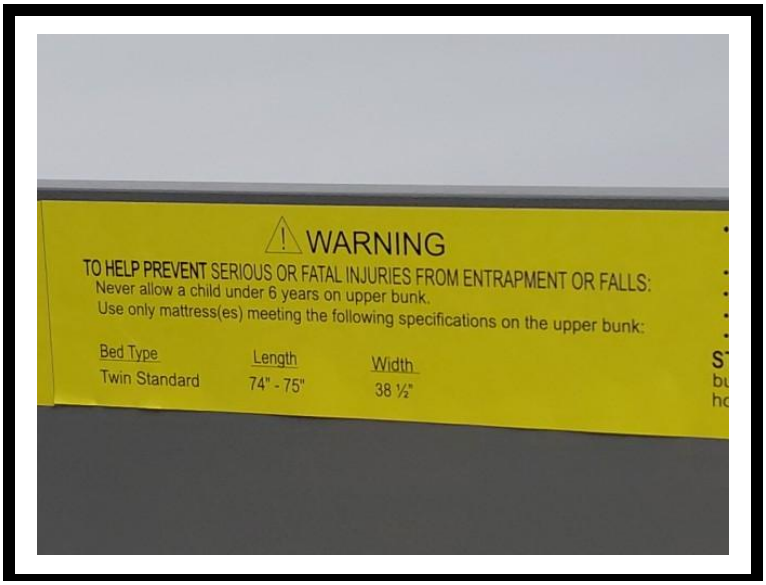

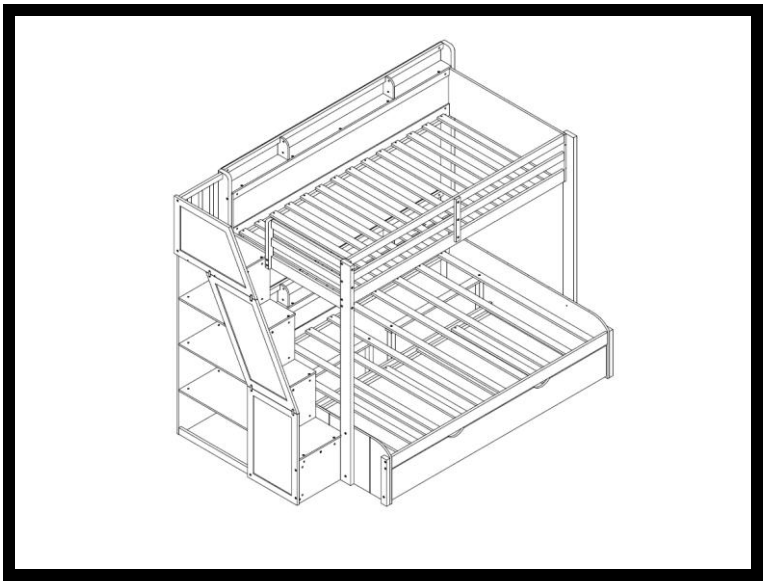

FIGURE 1

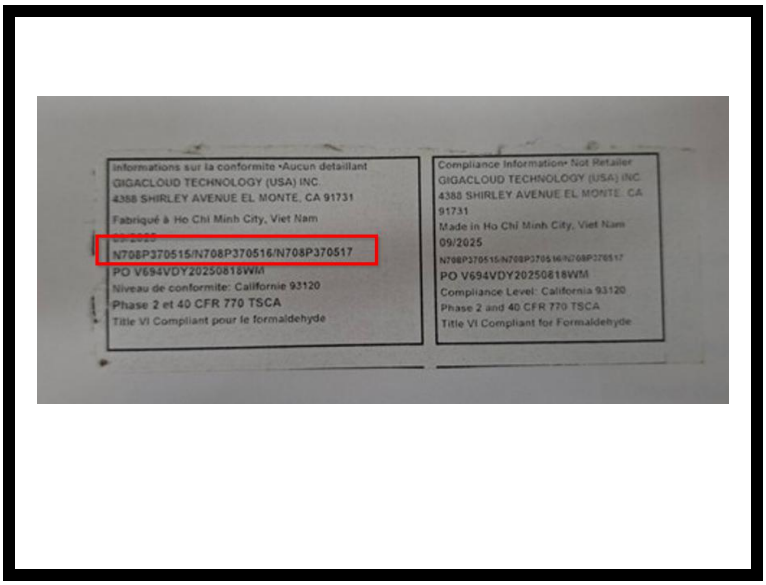

FIGURE 2