Technical Report: **96252870740** OCTOBER 21, 2025
Date Received: OCTOBER 14, 2025

DAI VIET CO., LTD
NO. 276/19/13 TRAN HUNG DAO STREET, DONG B QUARTER, DONG HOA WARD, HO CHI MINH CITY, VIET NAM.

Sample Description:	L SHAPE TWIN BED WITH STAIR		
Vendor:	DAI VIET CO., LTD	Sample Size:	/
Manufacturer:	DAI VIET CO., LTD	VPN:	/
Buyer:	GIGACLOUD	SKN/SKU No.:	N709P375703/N709P375704/ N709P375705
Agent:	/		/
Labeled Age Grade:	/	PO No.:	V499VDY20250904WM
Appropriate Age Grade:	/	Ref #:	/
Client Specified Age Grade:	/	Country of Origin:	VIETNAM
Tested Age Grade:	/	Assortment No.:	/
UPC Code:	/	Department No.:	/
Phase of Production:	/	Item#:	/
Color:	BLACK + RED FRAME	Date of Production:	/
Program:	/	Model/Style#:	/
Previous No:	96252730419	Country of Destination:	USA

TEST PROPERTY	PASS	FAIL	DATA	N/A	Remark
CPSIA Total lead content in Surface Coating	X				
CPSIA Total Lead Content In Substrate Materials	X				
15 U.S.C 1278a Total Lead Content	X				
16 CFR 1213 Bunk Beds	X				
16 CFR 1513 Requirements for Bunk Beds	X				
ASTM F1427-21e1 Bunk Beds	X				

Note(s):
- This report includes the test result(s) which was conducted & reviewed by Analytical department.
- Recommend to separate tracking label for each SKU (Please see figure 1)
- The Chemical test following reports listed:

No.	Tested component:	Chemical test	Reference report
1	Silver Plastic With Black Print & Glue (Label Of Plug)	CPSIA Total Lead Content in Substrate + 15 U.S.C 1278a Total Lead Content	96252560088
2	Transparent Plastic With White Paper & Black Print (Manufacturer Label)		
3	Black Plastic (Plug)		
4	Black Plastic (Cable Connect Plug/ Cable Connect Led)		
5	Black Plastic (Cord)		
6	Black Plastic With White Print (Wrap Cord)		

Bureau Veritas
Consumer Products Services (VN) Ltd.
Lot C7-C9, Conurbation 2, Cat Lai Industrial Zone, Thanh My Loi Ward, Thu Duc City, HCMC, Vietnam
Tel: 84-028-37421604~6 Fax: 84-028-37421603
website:www.bureauveritas.com/cps

This report is governed by, and incorporates by reference, the Conditions of Testing as posted at the date of issuance of this report at http://www.bureauveritas.com/home/about-us/our-business/cps/about-us/terms-conditions/ and is intended for your exclusive use. Any copying or replication of this report to or for any other person or entity, or use of our name or trademark, is permitted only with our prior written permission. This report sets forth our findings solely with respect to the test samples identified herein. The results set forth in this report are not indicative or representative of the quality or characteristics of the lot from which a test sample was taken or any similar or identical product unless specifically and expressly noted. Our report includes all of the tests requested by you and the results thereof based upon the information that you provided to us. Measurement uncertainty is only provided upon request for accredited tests. Statements of conformity are based on simple acceptance criteria without taking measurement uncertainty into account, unless otherwise requested in writing. You have 60 days from date of issuance of this report to notify us of any material error or omission caused by our negligence or if you require measurement uncertainty; provided, however, that such notice shall be in writing and shall specifically address the issue you wish to raise. A failure to raise such issue within the prescribed time shall constitute your unqualified acceptance of the completeness of this report, the tests conducted and the correctness of the report contents.

7	Transparent Plastic (Cover Electric Led)		

If there is any question regarding this report, please contact the following lab personnel:

Administrative inquiries, please contact:
Primary Contact: Elise Vo, Tel: 84-028-37421-604 ~ 6, Ext: 394; email: elise.vo@bureauveritas.com
Back-up Contact: Cynthia Vuong, Tel: 848-37421-604 ~ 6, Ext: 641; email: cynthia.vuong@bureauveritas.com

Technical inquiries, please contact:
Primary Contact: Terry Nguyen, Tel: 84-028-37421-604 ~ 6, Ext: 355; email: terry.nguyen@bureauveritas.com
Back-up Contact: Louis Tran, Tel: 84-028-37421-604 ~ 6, Ext: 339; email: louis.tran@bureauveritas.com

BUREAU VERITAS CONSUMER PRODUCTS SERVICES (VN) LTD.

TERRY NGUYEN
LAB MANAGER – HARDLINE, TOYS & JUVENILE PRODUCTS DIVISION

SAMPLE DESCRIPTION ASSIGNED BY LABORATORY

Test Item(s)	Sample description/ Location	Material	Style(s)
I001	Black Coating (Wood)	Coating	-
I002	Red Coating (Wood)	Coating	-
I003	Black / Yellow Overlapping Coating (Warning Label)	Coating	-
I004	Red / Yellow Overlapping Coating (Maximum Weight Label)	Coating	-
I005	Black / White Overlapping Coating (Tracking Label)	Coating	-
I006	Black / Yellow / Red Overlapping Coating (CA Prop 65 Label)	Coating	-
I007	Black / White Overlapping Coating (COO Label)	Coating	-
I008	Bolt	Metal	-
I009	Metal Plate	Metal	-
I010	Barrel Nut	Metal	-
I011	Cap Nut	Metal	-
I012	Flat Head Screw	Metal	-
I013	L-Shaped Bracket	Metal	-
I014	MDF	Wood	-
I015	Plywood	Wood	-

TEST RESULT

Total Lead Content in Surface Coating:
- United States Consumer Product Safety Improvement Act (CPSIA) of 2008, Section 101(a)(2) / United States Code of Federal Regulations (CFR), Title 16, Part 1303

Test Method: U. S. CPSC-CH-E1003-09.1 (February 25, 2011).

Maximum Allowable Limit :	90 mg/kg

-	Unit	Result		
Test Item(s)	-	I001+I002	I003+I004+I005	I006+I007
Parameter	-	-	-	-
Total Lead (Pb)	mg/kg	ND	ND	ND
Conclusion	-	PASS	PASS	PASS

Note / Key :

ND = Not detected NA = Not applicable “>” = Greater than
mg/kg = milligram(s) per kilogram = ppm = part(s) per million
Reporting Limit (mg/kg) : 10

Remark :

- Component(s) in Test Item(s) may not able to be tested individually due to overlapping.

TEST RESULT

Total Lead Content in Substrate:
- United States Consumer Product Safety Improvement Act (CPSIA) Section 101(a)(2)

Test Method: U. S. CPSC Test Method CPSC-CH-E1001-08.3 (November 15, 2012) or U. S. CPSC Test Method CPSC-CH-E1002-08.3 (November 15, 2012).

Maximum Allowable Limit :	**100 mg/kg**

-	**Unit**	**Result**			
Test Item(s)	-	I008	I009	I010	I011
Parameter	-	-	-	-	-
Total Lead (Pb)	mg/kg	ND	ND	ND	ND
Conclusion	-	PASS	PASS	PASS	PASS

-	**Unit**	**Result**		
Test Item(s)	-	I012	I013	I014+I015
Parameter	-	-	-	-
Total Lead (Pb)	mg/kg	ND	ND	ND
Conclusion	-	PASS	PASS	PASS

Note / Key :

ND = Not detected NA = Not applicable “>” = Greater than
mg/kg = milligram(s) per kilogram = ppm = part(s) per million
Reporting Limit (mg/kg) : 10

Remark :

- According to Children’s Products Containing Lead; Exemptions for Certain Electronic Devices; Final Rule, exemption were granted to steel alloy containing up to 0.35 % lead by weight, aluminum containing up to 0.4 % lead by weight and copper-based alloy containing up to 4 % lead by weight.
- According to Petition Requesting Exception from Lead Content Limits; Notice Granting Exception, exemption was granted to certain aluminum alloy on certain ride-on children`s products containing up to 0.03 % lead weight.

TEST RESULT

Total Lead Content:
15 U.S.C 1278a-Children Product Containing Lead

Maximum Allowable Limit :	**100 mg/kg**

-	**Unit**	**Result**				
Test Item(s)	-	I001+I002	I003+I004+I005	I006+I007	I008	I009
Parameter	-	-	-	-	-	-
Total Lead (Pb)	mg/kg	ND	ND	ND	ND	ND
Conclusion	-	PASS	PASS	PASS	PASS	PASS

-	**Unit**	**Result**				
Test Item(s)	-	I010	I011	I012	I013	I014+I015
Parameter	-	-	-	-	-	-
Total Lead (Pb)	mg/kg	ND	ND	ND	ND	ND
Conclusion	-	PASS	PASS	PASS	PASS	PASS

Note / Key :

ND = Not detected NA = Not applicable “>” = Greater than
mg/kg = milligram(s) per kilogram = ppm = part(s) per million 10000 mg/kg = 1 % % = percent
Reporting Limit (mg/kg) : 10

Remark :

- Tested per client’s request

LEFT BUNK BED (BUNK BED WITH UPPER AND LOWER BED)

RESULT(S):

REQUIREMENTS FOR BUNK BEDS (FHSA, Title 16, CFR, Part 1213 & 1513)

Section	Description	Results
1213.3 1513.3	Requirements	
1213.3(a) 1513.3(a)	Guardrails	
1213.3(a)(1) 1513.3(a)(1)	Two guardrails required if bed is > 30 inches from ground	M
1213.3(a)(2) 1513.3(a)(2)	One guardrail shall be continuous	M
1213.3(a)(3) 1513.3(a)(3)	No greater than 15 inches between either end	M
1213.3(a)(4) 1513.3(a)(4)	Bunk Beds with ladder, continuous guardrail on other side	M
1213.3(a)(5) 1513.3(a)(5)	Guardrails attached so they cannot be removed without releasing a device	M
1213.3(a)(6) 1513.3(a)(6)	The upper edge shall be no less than 5 inches above top surface	M
1213.3(a)(7) 1513.3(a)(7)	No openings in the structure between lower edge and underside	M
1213.3(b) 1513.3(b)	Bed End Structures	
1213.3(b)(1) 1513.3(b)(1)	The upper edge of end structure shall be at least 5 inches above mattress	M
1213.3(b)(2) 1513.3(b)(2)	No openings in the structure above foundation of the upper bunk that permits passage of the wedge block	M
1213.3(b)(3) 1513.3(b)(3)	Tested in accordance with Section 1213.4(c)	M
1213.3(b)(4) 1513.3(b)(4)	Neck entrapment requirements of Section 1213.4(c)(3)	M
1213.5 1513.5	Marking and Labeling	
1213.5(a) 1513.5(a)	Permanent label with name and address, model # and date code	M
1213.5(b) 1513.5(b)	Permanent Warning Label placement	M
1213.6 1513.6	Instructions	
1213.6(a) 1513.6(a)	Size of mattress and foundation	M
1213.6(b) 1513.6(b)	Safety Warning	-

REQUIREMENTS FOR BUNK BEDS (FHSA, Title 16, CFR, Part 1213 & 1513)

Section	Description	Results
1213.6(b)(1) 1513.6(b)(1)	Do not allow children under 6 years of age to use the upper bunk	M
1213.6(b)(2) 1513.6(b)(2)	Use guardrails on both sides of the upper bunk	M
1213.6(b)(3) 1513.6(b)(3)	Prohibit horseplay on or under beds	M
1213.6(b)(4) 1513.6(b)(4)	Prohibit more than one person on upper bunk	M
1213.6(b)(5) 1513.6(b)(5)	Use ladder for entering or leaving upper bunk	M
1213.6(b)(6) 1513.6(b)(6)	If the bed is placed against a wall, use full length guardrail along wall	M

M = Meet NM = Not Meet NA = Not Applicable R = Refer to Comment Section

RIGHT LOFT BED

RESULT(S):

REQUIREMENTS FOR BUNK BEDS (FHSA, Title 16, CFR, Part 1213 & 1513)

Section	Description	Results
1213.3 1513.3	Requirements	
1213.3(a) 1513.3(a)	Guardrails	
1213.3(a)(1) 1513.3(a)(1)	Two guardrails required if bed is > 30 inches from ground	M
1213.3(a)(2) 1513.3(a)(2)	One guardrail shall be continuous	M
1213.3(a)(3) 1513.3(a)(3)	No greater than 15 inches between either end	M
1213.3(a)(4) 1513.3(a)(4)	Bunk Beds with ladder, continuous guardrail on other side	M
1213.3(a)(5) 1513.3(a)(5)	Guardrails attached so they cannot be removed without releasing a device	M
1213.3(a)(6) 1513.3(a)(6)	The upper edge shall be no less than 5 inches above top surface	M
1213.3(a)(7) 1513.3(a)(7)	No openings in the structure between lower edge and underside	M
1213.3(b) 1513.3(b)	Bed End Structures	
1213.3(b)(1) 1513.3(b)(1)	The upper edge of end structure shall be at least 5 inches above mattress	M
1213.3(b)(2) 1513.3(b)(2)	No openings in the structure above foundation of the upper bunk that permits passage of the wedge block	M
1213.3(b)(3) 1513.3(b)(3)	Tested in accordance with Section 1213.4(c)	NA
1213.3(b)(4) 1513.3(b)(4)	Neck entrapment requirements of Section 1213.4(c)(3)	NA
1213.5 1513.5	Marking and Labeling	
1213.5(a) 1513.5(a)	Permanent label with name and address, model # and date code	M
1213.5(b) 1513.5(b)	Permanent Warning Label placement	M
1213.6 1513.6	Instructions	
1213.6(a) 1513.6(a)	Size of mattress and foundation	M
1213.6(b) 1513.6(b)	Safety Warning	-

REQUIREMENTS FOR BUNK BEDS (FHSA, Title 16, CFR, Part 1213 & 1513)

Section	Description	Results
1213.6(b)(1) 1513.6(b)(1)	Do not allow children under 6 years of age to use the upper bunk	M
1213.6(b)(2) 1513.6(b)(2)	Use guardrails on both sides of the upper bunk	M
1213.6(b)(3) 1513.6(b)(3)	Prohibit horseplay on or under beds	M
1213.6(b)(4) 1513.6(b)(4)	Prohibit more than one person on upper bunk	M
1213.6(b)(5) 1513.6(b)(5)	Use ladder for entering or leaving upper bunk	M
1213.6(b)(6) 1513.6(b)(6)	If the bed is placed against a wall, use full length guardrail along wall	M

M = Meet NM = Not Meet NA = Not Applicable R = Refer to Comment Section

LEFT BUNK BED (BUNK BED WITH UPPER AND LOWER BED)

RESULT(S):

STANDARD CONSUMER SAFETY SPECIFICATION FOR BUNK BEDS (ASTM F1427-21e1)

Section	Requirement	Result
4	Performance Requirements	
4.1	Vertical Protrusions	-
4.1.1	Vertical protrusions along the top inside surface	M
4.1.2	Cap used along the top surface of upper bunk	NA
4.2	Fit of Top Bed to Bottom Bed	NA
4.3	Mattress and Foundation Size and Fit (Top Bed)	M
4.4	Mattress Size and Fit (Lower Foundation)	M
4.5	Upper and Lower Foundation Support Systems	-
4.5.1	Horizontal position of the mattress and the foundation	M
4.5.2	Utilized event cross-members	M
4.5.3	Release of positive fastening devices or use of hand tools	M
4.5.4	Static load for the foundation support system	M
4.6	Side Rails	-
4.6.1	Bolt-On Side Rails	M
4.6.2	Hook-On Side Rails	NA
4.6.3	Side rail attachments	M
4.7	Guardrails	-
4.7.1	Presence of guardrails	M
4.7.2	Requirement of attachment	M
4.7.3	Requirement of height of the upper edge above the sleeping surface	M
4.7.4	Opening of the guardrail	M
4.7.5	Opening between the either end of the guardrail and the bed end structure	M
4.8	Bed Structure	-
4.8.1	The upper edge of the upper bunk end structures	M
4.8.2	Openings in the rigid end structures of the upper bunk	M
4.8.3	Openings in the end structures of the lower bunk	M
4.8.4	Neck entrapment requirement of all portions of the boundary of any opening of the lower bunk end structure	M
4.9	Ladders	-
4.9.1	Presence of ladder	M
4.9.2	Dimension requirement of ladder	M
4.9.3	Openings between ladder step and upper bunk boundary	M
4.9.4	Gaps between edge of mattress and interior vertical stile	M
4.10	Metal beds: frame and fastenings	NA
6	Marking and Labeling	M
7	Instructional Literature	M

M = Meet NM = Not Meet NA = Not Applicable R = Refer to Comment Section

RIGHT LOFT BED

RESULT(S):

STANDARD CONSUMER SAFETY SPECIFICATION FOR BUNK BEDS (ASTM F1427-21e1)

Section	Requirement	Result
4	Performance Requirements	
4.1	Vertical Protrusions	-
4.1.1	Vertical protrusions along the top inside surface	M
4.1.2	Cap used along the top surface of upper bunk	NA
4.2	Fit of Top Bed to Bottom Bed	NA
4.3	Mattress and Foundation Size and Fit (Top Bed)	M
4.4	Mattress Size and Fit (Lower Foundation)	NA
4.5	Upper and Lower Foundation Support Systems	-
4.5.1	Horizontal position of the mattress and the foundation	M
4.5.2	Utilized event cross-members	M
4.5.3	Release of positive fastening devices or use of hand tools	M
4.5.4	Static load for the foundation support system	M
4.6	Side Rails	-
4.6.1	Bolt-On Side Rails	M
4.6.2	Hook-On Side Rails	NA
4.6.3	Side rail attachments	M
4.7	Guardrails	-
4.7.1	Presence of guardrails	M
4.7.2	Requirement of attachment	M
4.7.3	Requirement of height of the upper edge above the sleeping surface	M
4.7.4	Opening of the guardrail	M
4.7.5	Opening between the either end of the guardrail and the bed end structure	M
4.8	Bed Structure	-
4.8.1	The upper edge of the upper bunk end structures	M
4.8.2	Openings in the rigid end structures of the upper bunk	M
4.8.3	Openings in the end structures of the lower bunk	NA
4.8.4	Neck entrapment requirement of all portions of the boundary of any opening of the lower bunk end structure	NA
4.9	Ladders	-
4.9.1	Presence of ladder	M
4.9.2	Dimension requirement of ladder	M
4.9.3	Openings between ladder step and upper bunk boundary	M
4.9.4	Gaps between edge of mattress and interior vertical stile	NA
4.10	Metal beds: frame and fastenings	NA
6	Marking and Labeling	M
7	Instructional Literature	M

M = Meet NM = Not Meet NA = Not Applicable R = Refer to Comment Section

CARTON LAYOUT

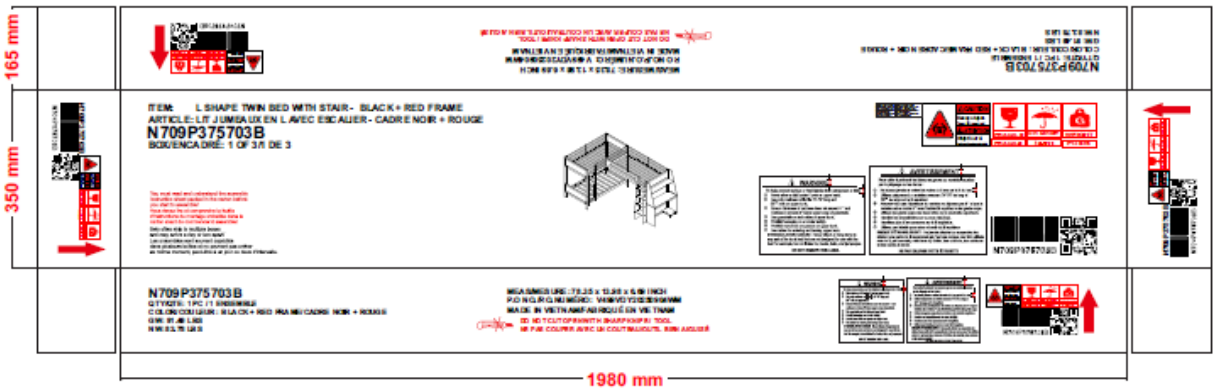

WARNING

To help prevent serious or fatal injuries from entrapment or falls:

1. Never allow a child under 6 year on upper bunk.
2. Use only mattress which is 74"-75" long and 38 1/2" wide on upper bunk.
3. Ensure thickness of mattress does not exceed 6 " and mattress is at least 5" below upper edge of guardrails.
4. Use guardrails on both sides of upper bunk.
5. Prohibit horseplay on or under bed(s).
6. Prohibit more than one person on upper bunk.
7. Use ladder for entering and leaving upper bunk.

STRANGULATION HAZARD - Never attach or hang items to any part of the bunk bed that are not designed for use with the bed: for example, but not limited to, hooks, belts, and jumpropes.

DO NOT REMOVE THIS LABEL

AVERTISSEMENT

Pour aider à prévenir les blessures graves ou mortelles causées par le piégeage ou les chutes :

1. Ne laissez jamais un enfant de moins de 6 ans sur le lit du haut.
2. Utilisez uniquement un matelas mesurant 74"-75" de long et 38 1/2" de large sur le lit supérieur.
3. Assurez-vous que l'épaisseur du matelas ne dépasse pas 6 " et que le matelas est au moins 5 " sous l'extrémité supérieure des garde-corps.
4. Utilisez des garde-corps des deux côtés de la couchette supérieure.
5. Interdire les chamailleries sur ou sous le(s) lit(s).
6. Interdisez plus d'une personne sur le lit supérieur.
7. Utilisez une échelle pour entrer et sortir du lit supérieur

RISQUE D'ÉTRANGLEMENT - Ne jamais attacher ou suspendre des objets à une partie du lit superposé qui n'est pas conçue pour être utilisée avec le lit, par exemple, mais sans s'y limiter, des crochets, des ceintures et des cordes à sauter.

NE PAS ENLEVER CETTE ÉTIQUETTE

N709P375703B

CAUTION
Heavy object.
Team lift required.

ATTENTION
Objet lourd.
Levée en équipe necessaire.

FRAGILE | NO MOIST | WEIGHT
FRAGILE | À L'ABRI DE L'HUMIDITÉ | POIDS

N709P375703B

⚠ WARNING

To help prevent serious or fatal injuries from entrapment or falls:

① Never allow a child under 6 year on upper bunk.
② Use only mattress which is 74"-75" long and 38$^{1/2"}$ wide on upper bunk.
③ Ensure thickness of mattress does not exceed 6 " and mattress is at least 5" below upper edge of guardrails.
④ Use guardrails on both sides of upper bunk.
⑤ Prohibit horseplay on or under bed(s).
⑥ Prohibit more than one person on upper bunk.
⑦ Use ladder for entering and leaving upper bunk.

STRANGULATION HAZARD - Never attach or hang items to any part of the bunk bed that are not designed for use with the bed: for example, but not limited to, hooks, belts, and jumpropes.

DO NOT REMOVE THIS LABEL

⚠ AVERTISSEMENT

Pour aider à prévenir les blessures graves ou mortelles causées par le piégeage ou les chutes :

① Ne laissez jamais un enfant de moins de 6 ans sur le lit du haut.
② Utilisez uniquement un matelas mesurant 74"-75" de long et 38$^{1/2"}$ de large sur le lit supérieur.
③ Assurez-vous que l'épaisseur du matelas ne dépasse pas 6 " et que le matelas est au moins 5 " sous l'extrémité supérieure des garde-corps.
④ Utilisez des garde-corps des deux côtés de la couchette supérieure.
⑤ Interdire les chamailleries sur ou sous le(s) lit(s).
⑥ Interdisez plus d'une personne sur le lit supérieur.
⑦ Utilisez une échelle pour entrer et sortir du lit supérieur

RISQUE D'ÉTRANGLEMENT - Ne jamais attacher ou suspendre des objets à une partie du lit superposé qui n'est pas conçue pour être utilisée avec le lit, par exemple, mais sans s'y limiter, des crochets, des ceintures et des cordes à sauter.

NE PAS ENLEVER CETTE ÉTIQUETTE

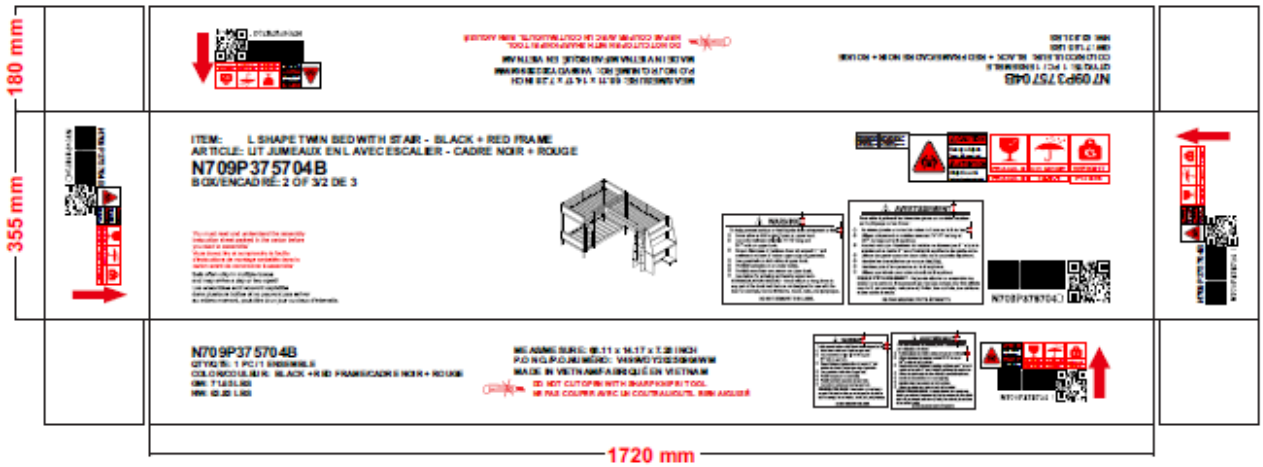
180 mm
355 mm
ITEM: L SHAPE TWIN BED WITH STAIR - BLACK + RED FRAME
ARTICLE: LIT JUMEAUX EN L AVEC ESCALIER - CADRE NOIR + ROUGE
N709P375704B
BOIS/ENCADRE: 2 OF 3/2 DE 3
N709P375704B
1720 mm

WARNING

To help prevent serious or fatal injuries from entrapment or falls:

1. Never allow a child under 6 year on upper bunk.
2. Use only mattress which is 74"-75" long and 38 1/2" wide on upper bunk.
3. Ensure thickness of mattress does not exceed 6 " and mattress is at least 5" below upper edge of guardrails.
4. Use guardrails on both sides of upper bunk.
5. Prohibit horseplay on or under bed(s).
6. Prohibit more than one person on upper bunk.
7. Use ladder for entering and leaving upper bunk.

STRANGULATION HAZARD - Never attach or hang items to any part of the bunk bed that are not designed for use with the bed: for example, but not limited to, hooks, belts, and jumpropes.

DO NOT REMOVE THIS LABEL

AVERTISSEMENT

Pour aider à prévenir les blessures graves ou mortelles causées par le piégeage ou les chutes :

1. Ne laissez jamais un enfant de moins de 6 ans sur le lit du haut.
2. Utilisez uniquement un matelas mesurant 74"-75" de long et 38 1/2" de large sur le lit supérieur.
3. Assurez-vous que l'épaisseur du matelas ne dépasse pas 6 " et que le matelas est au moins 5 " sous l'extrémité supérieure des garde-corps.
4. Utilisez des garde-corps des deux côtés de la couchette supérieure.
5. Interdire les chamailleries sur ou sous le(s) lit(s).
6. Interdisez plus d'une personne sur le lit supérieur.
7. Utilisez une échelle pour entrer et sortir du lit supérieur

RISQUE D'ÉTRANGLEMENT - Ne jamais attacher ou suspendre des objets à une partie du lit superposé qui n'est pas conçue pour être utilisée avec le lit, par exemple, mais sans s'y limiter, des crochets, des ceintures et des cordes à sauter.

NE PAS ENLEVER CETTE ÉTIQUETTE

N709P375704B

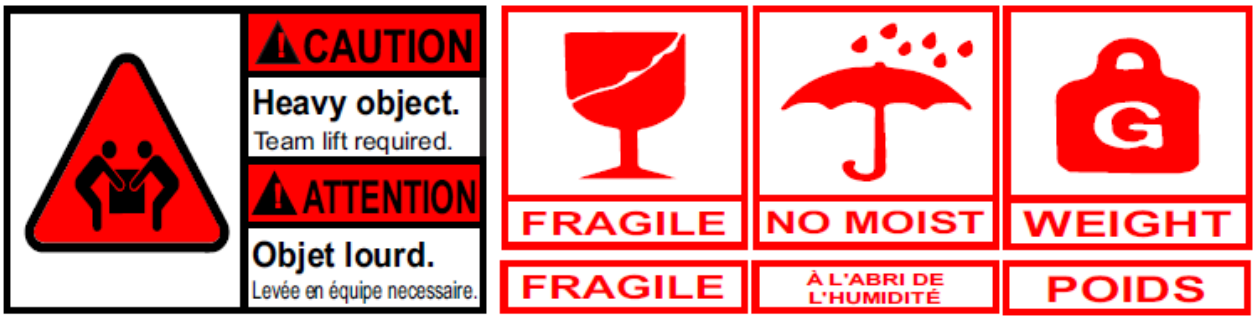

CAUTION
Heavy object.
Team lift required.
ATTENTION
Objet lourd.
Levée en équipe necessaire
FRAGILE
NO MOIST
WEIGHT
FRAGILE
À L'ABRI DE L'HUMIDITÉ
POIDS
N709P375704B

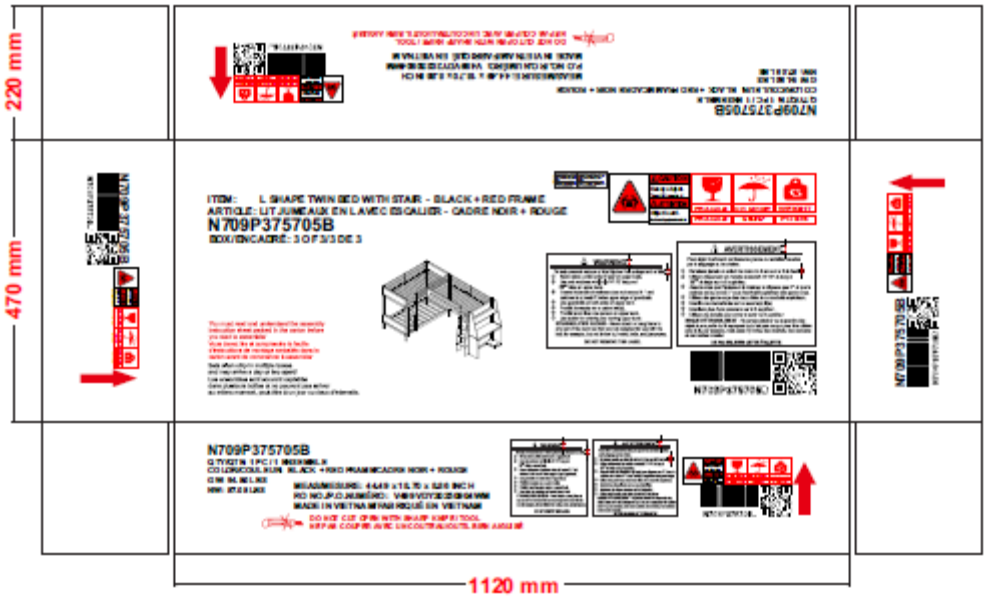
220 mm
470 mm
1120 mm
ITEM: L SHAPE TWIN BED WITH STAIR - BLACK + RED FRAME
ARTICLE: LIT JUMEAUX EN L AVEC ESCALIER - CADRE NOIR + ROUGE
N709P375705B
BOX/ENCADRE: 3 OF 3/3 DE 3
N709P375705B

WARNING

To help prevent serious or fatal injuries from entrapment or falls:

1. Never allow a child under 6 year on upper bunk.
2. Use only mattress which is 74"-75" long and 38$^{1/2"}$ wide on upper bunk.
3. Ensure thickness of mattress does not exceed 6 " and mattress is at least 5" below upper edge of guardrails.
4. Use guardrails on both sides of upper bunk.
5. Prohibit horseplay on or under bed(s).
6. Prohibit more than one person on upper bunk.
7. Use ladder for entering and leaving upper bunk.

STRANGULATION HAZARD - Never attach or hang items to any part of the bunk bed that are not designed for use with the bed: for example, but not limited to, hooks, belts, and jumpropes.

DO NOT REMOVE THIS LABEL

AVERTISSEMENT

Pour aider à prévenir les blessures graves ou mortelles causées par le piégeage ou les chutes :

1. Ne laissez jamais un enfant de moins de 6 ans sur le lit du haut.
2. Utilisez uniquement un matelas mesurant 74"-75" de long et 38$^{1/2"}$ de large sur le lit supérieur.
3. Assurez-vous que l'épaisseur du matelas ne dépasse pas 6 " et que le matelas est au moins 5 " sous l'extrémité supérieure des garde-corps.
4. Utilisez des garde-corps des deux côtés de la couchette supérieure.
5. Interdire les chamailleries sur ou sous le(s) lit(s).
6. Interdisez plus d'une personne sur le lit supérieur.
7. Utilisez une échelle pour entrer et sortir du lit supérieur

RISQUE D'ÉTRANGLEMENT - Ne jamais attacher ou suspendre des objets à une partie du lit superposé qui n'est pas conçue pour être utilisée avec le lit, par exemple, mais sans s'y limiter, des crochets, des ceintures et des cordes à sauter.

NE PAS ENLEVER CETTE ÉTIQUETTE

N709P375705B

CAUTION
Heavy object.
Team lift required.

ATTENTION
Objet lourd.
Levée en équipe necessaire.

FRAGILE
FRAGILE

NO MOIST
À L'ABRI DE L'HUMIDITÉ

WEIGHT
POIDS

Compliance Information - Not Retailer
GIGACLOUD TECHNOLOGY (USA) INC.
4388 SHIRLEY AVENUE EL MONTE, CA 91731
Made in Ho Chi Minh City, Viet Nam
10/2025
N709P375703/N709P375704/N709P375705
PO V499VDY20250904WM
Compliance Level: California 93120
Phase 2 and 40 CFR 770 TSCA
Title VI Compliant for Formaldehyde

Informations sur la conformité - Aucun détaillant
GIGACLOUD TECHNOLOGY (USA) INC.
4388 SHIRLEY AVENUE EL MONTE, CA 91731
Fabriqué à Ho Chi Minh City, Viet Nam
10/2025
N709P375703/N709P375704/N709P375705
PO V499VDY20250904WM
Niveau de conformité : Californie 93120
Phase 2 et 40 CFR 770 TSCA
Titre VI Compliant pour le formaldéhyde

⚠ WARNING

To help prevent serious or fatal injuries from entrapment or falls:

1. Never allow a child under 6 year on upper bunk.
2. Use only mattress which is 74"-75" long and 38$^{1/2"}$ wide on upper bunk.
3. Ensure thickness of mattress does not exceed 6 " and mattress is at least 5" below upper edge of guardrails.
4. Use guardrails on both sides of upper bunk.
5. Prohibit horseplay on or under bed(s).
6. Prohibit more than one person on upper bunk.
7. Use ladder for entering and leaving upper bunk.

STRANGULATION HAZARD - Never attach or hang items to any part of the bunk bed that are not designed for use with the bed: for example, but not limited to, hooks, belts, and jumpropes.

DO NOT REMOVE THIS LABEL

⚠ AVERTISSEMENT

Pour aider à prévenir les blessures graves ou mortelles causées par le piégeage ou les chutes :

1. Ne laissez jamais un enfant de moins de 6 ans sur le lit du haut.
2. Utilisez uniquement un matelas mesurant 74"-75" de long et 38$^{1/2"}$ de large sur le lit supérieur.
3. Assurez-vous que l'épaisseur du matelas ne dépasse pas 6 " et que le matelas est au moins 5 " sous l'extrémité supérieure des garde-corps.
4. Utilisez des garde-corps des deux côtés de la couchette supérieure.
5. Interdire les chamailleries sur ou sous le(s) lit(s).
6. Interdisez plus d'une personne sur le lit supérieur.
7. Utilisez une échelle pour entrer et sortir du lit supérieur

RISQUE D'ÉTRANGLEMENT - Ne jamais attacher ou suspendre des objets à une partie du lit superposé qui n'est pas conçue pour être utilisée avec le lit, par exemple, mais sans s'y limiter, des crochets, des ceintures et des cordes à sauter.

NE PAS ENLEVER CETTE ÉTIQUETTE

WARNING LABEL

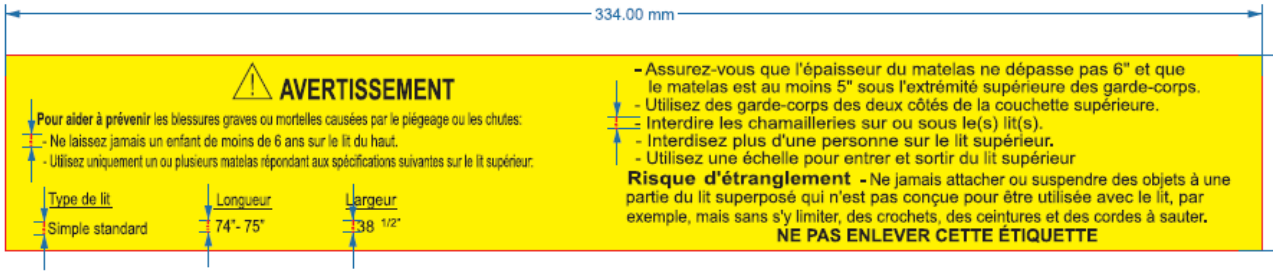

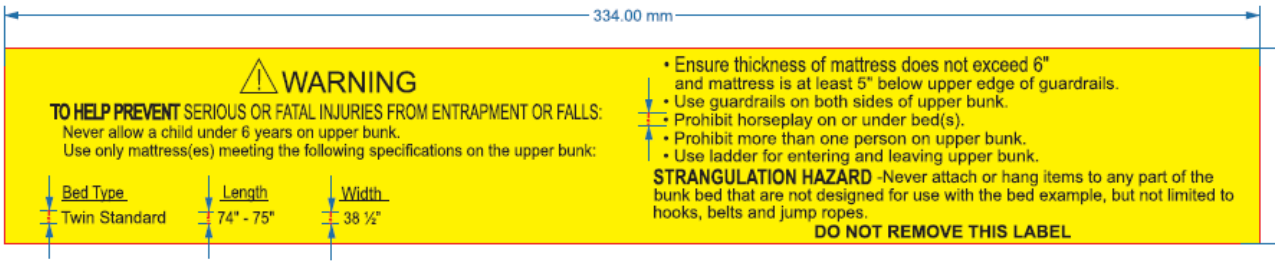

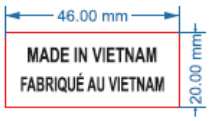

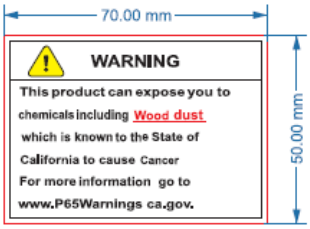

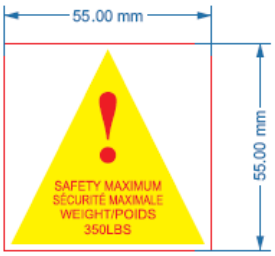

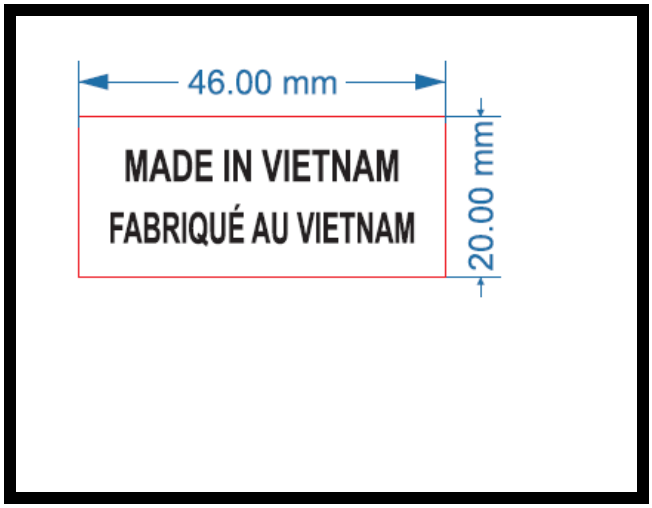

“MADE IN VIET NAM” LABEL

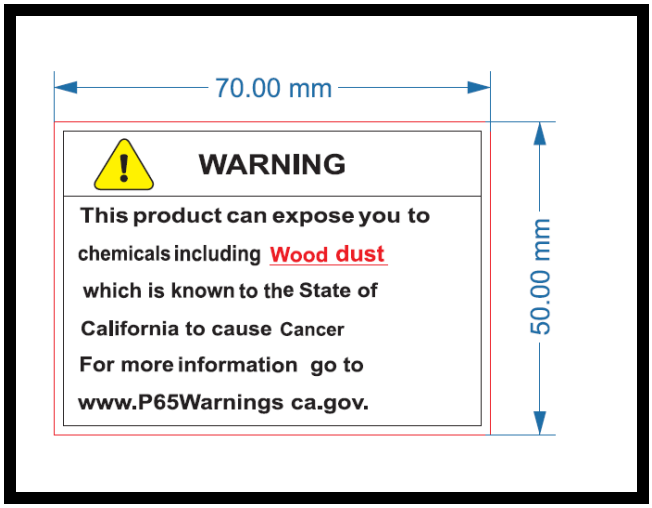

CA PROP 65 WANING LABEL

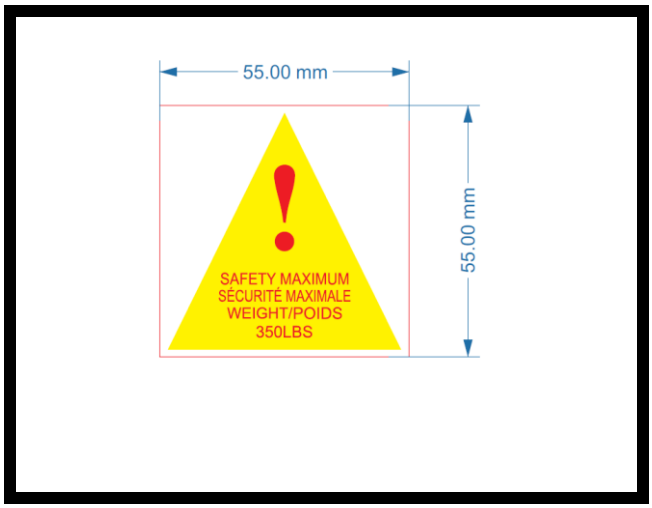

SAFETY MAXIMUM WEIGHT LABEL

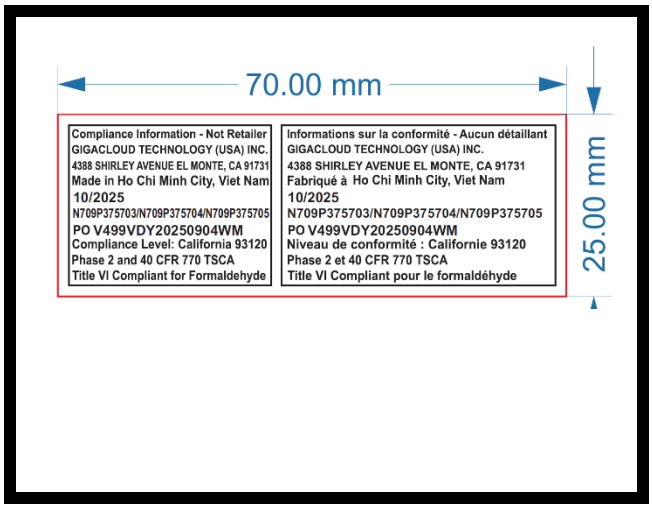

TRACKING LABEL

FIGURE PHOTO

FIGURE 1