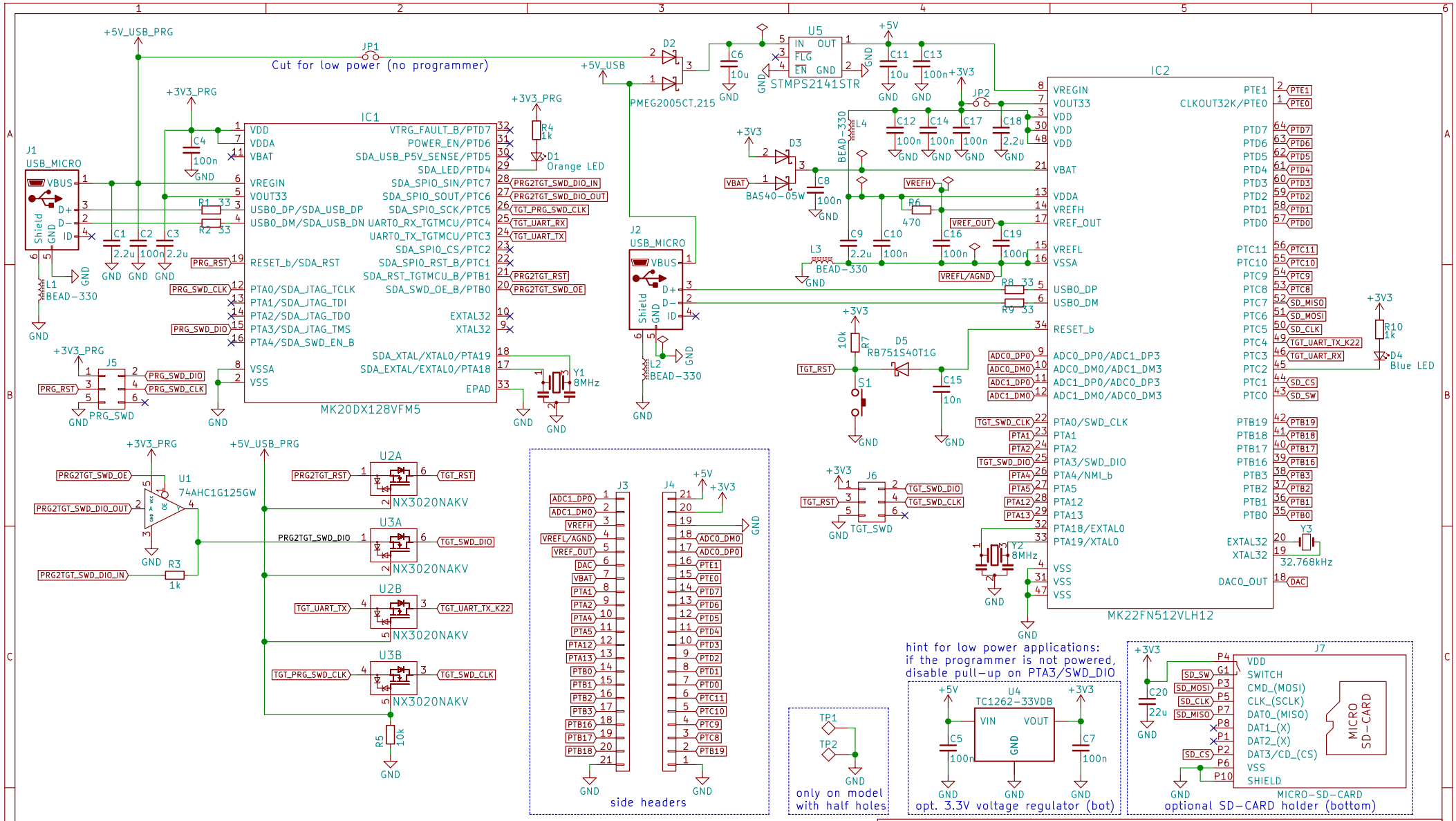

Hochschule Luzern T&A – CC-Electronics
Technikumstrasse 21
6048 Horw
Christian Di Battista
Hochschule Luzern T&A – CC-Electronics

Sheet: /
File: TinyK22.sch

Title: TinyK22

Size: A4	Date: 17-06-2020	**Rev: V1.3**
KiCad E.D.A. kicad (5.1.5)-3		Id: 1/1