TinyK22
V 1.3

Lucerne University of Applied Sciences and Arts
HOCHSCHULE LUZERN
Technik & Architektur

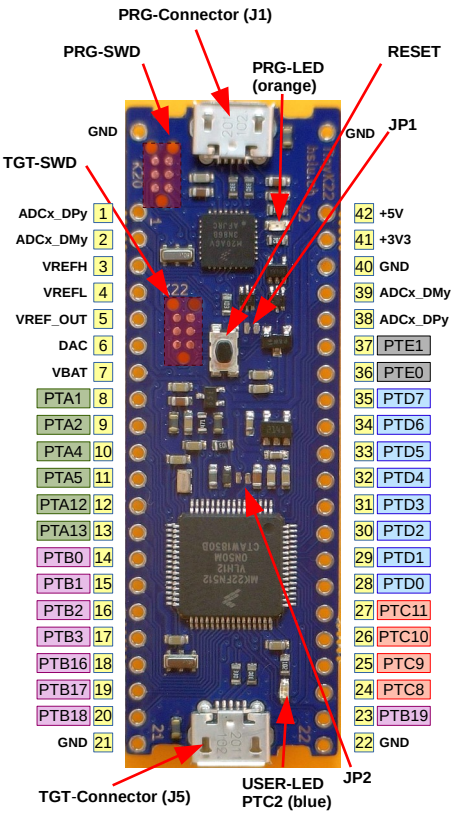

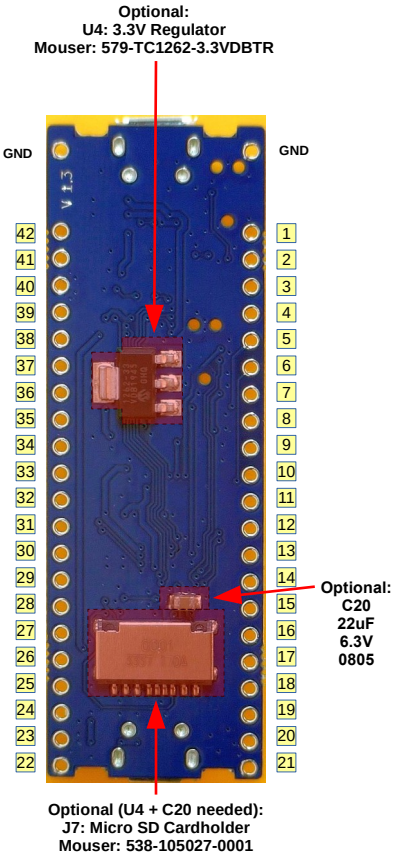

	LPUART0	UART0	UART1	UART2	FTM0	FTM1	FTM2	FTM3	I2C0	I2C1	SPI0	SPI1	ADC0	ADC1	CMP0
PTA1		R			6										
PTA2		T			7										
PTA4					1										
PTA5					2										
PTA12						0									
PTA13						1									
PTB0						0			C				8	8	
PTB1						1			D				9	9	
PTB2									C				12	12	
PTB3									D				13	13	
PTB16		R										O			
PTB17		T										I			
PTB18							0								
PTB19							1								
PTC8								4						4b	2
PTC9								5						5b	3
PTC10								6		C				6b	
PTC11								7		D				7b	
PTD0								0							
PTD1								1			C		5b		
PTD2	R			R				2	C		O				
PTD3	T			T				3	D		I				
PTD4					4										
PTD5					5							C	6b		
PTD6		R			6							O	7b		
PTD7		T			7							I			
PTE0			T							D				4a	
PTE1			R							C		I/O		5a	

UART R:RxD, T:TxD
FTM 0..7: Channel
I2C C:SCL, D:SDA
SPI C:Clock, O:SOUT, I:SIN
ADC 4..13:Channel
CMP 2..3: Input

UART to Programmer:
UART1 or LPUART0
(PTC3 & PTC4)

27102020

TinyK22
V 1.3

Lucerne University of Applied Sciences and Arts
HOCHSCHULE LUZERN
Technik & Architektur

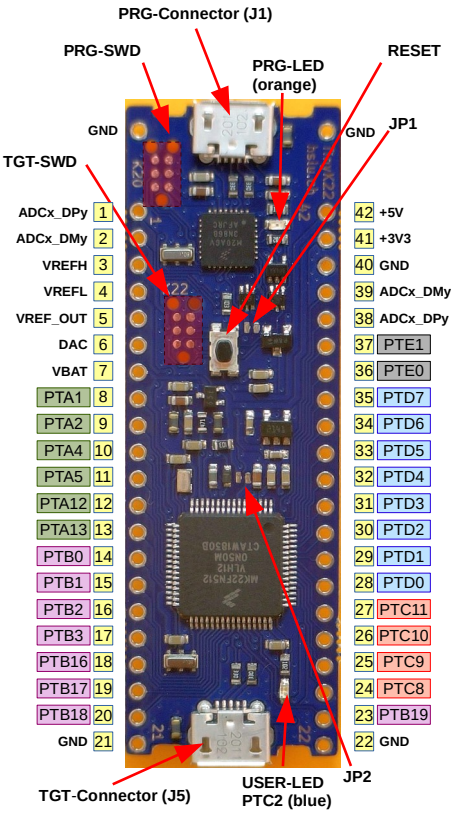

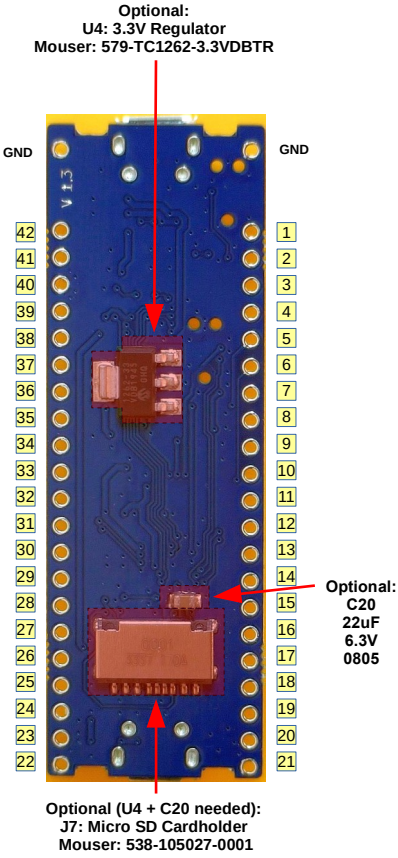

	LPUART0	UART0	UART1	UART2	FTM0	FTM1	FTM2	FTM3	I2C0	I2C1	SPI0	SPI1	ADC0	ADC1	CMP0
PTA1		R			6										
PTA2		T			7										
PTA4					1										
PTA5					2										
PTA12						0									
PTA13						1									
PTB0						0			C				8	8	
PTB1						1			D				9	9	
PTB2									C				12	12	
PTB3									D				13	13	
PTB16		R										O			
PTB17		T										I			
PTB18							0								
PTB19							1								
PTC8								4						4b	2
PTC9								5						5b	3
PTC10								6		C				6b	
PTC11								7		D				7b	
PTD0								0							
PTD1								1			C		5b		
PTD2	R			R				2	C		O				
PTD3	T			T				3	D		I				
PTD4					4										
PTD5					5							C	6b		
PTD6		R			6							O	7b		
PTD7		T			7							I			
PTE0			T							D				4a	
PTE1			R							C		I/O		5a	

UART R:RxD, T:TxD
FTM 0..7: Channel
I2C C:SCL, D:SDA
SPI C:Clock, O:SOUT, I:SIN
ADC 4..13:Channel
CMP 2..3: Input

UART to Programmer:
UART1 or LPUART0
(PTC3 & PTC4)

27102020

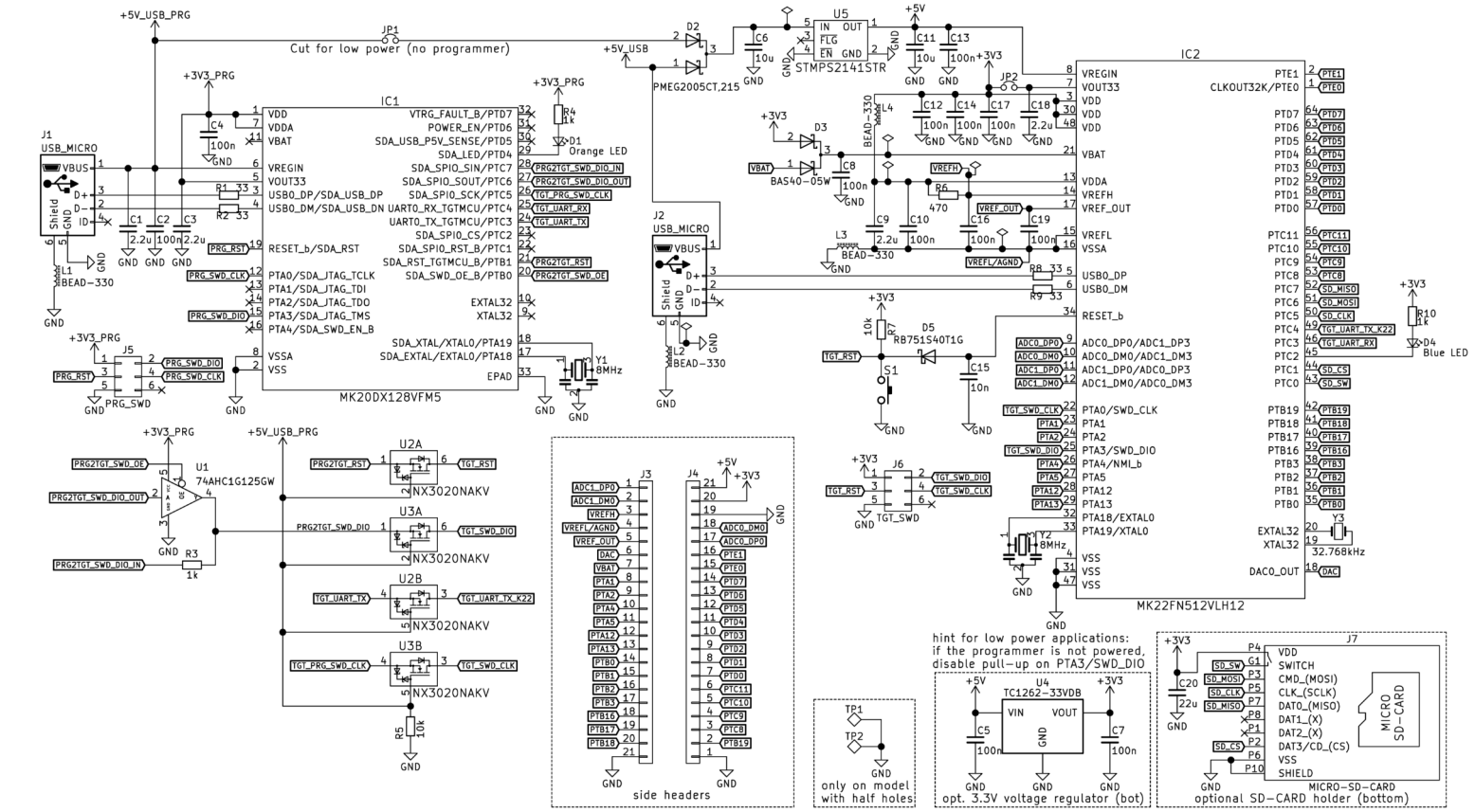

Cut for low power (no programmer)
+5V_USB_PRG
+3V3_PRG
+5V_USB
+5V
+3V3
IC1
MK20DX128VFM5
IC2
MK22FN512VLH12
J1
USB_MICRO
J2
USB_MICRO
J5
PRG_SWD
U1
74AHC1G125GW
U2A
U3A
U2B
U3B
NX3020NAKV
U5
STMPS2141STR
PMEG2005CT,215
BAS40-05W
RB751S40T1G
TC1262-33VDB
Y1
8MHz
Y2
8MHz
Y3
32.768kHz
D1
Orange LED
D4
Blue LED
J3
J4
side headers
J6
TGT_SWD
TP1
TP2
only on model
with half holes
hint for low power applications:
if the programmer is not powered,
disable pull-up on PTA3/SWD_DIO
opt. 3.3V voltage regulator (bot)
J7
MICRO SD-CARD
MICRO-SD-CARD
optional SD-CARD holder (bottom)

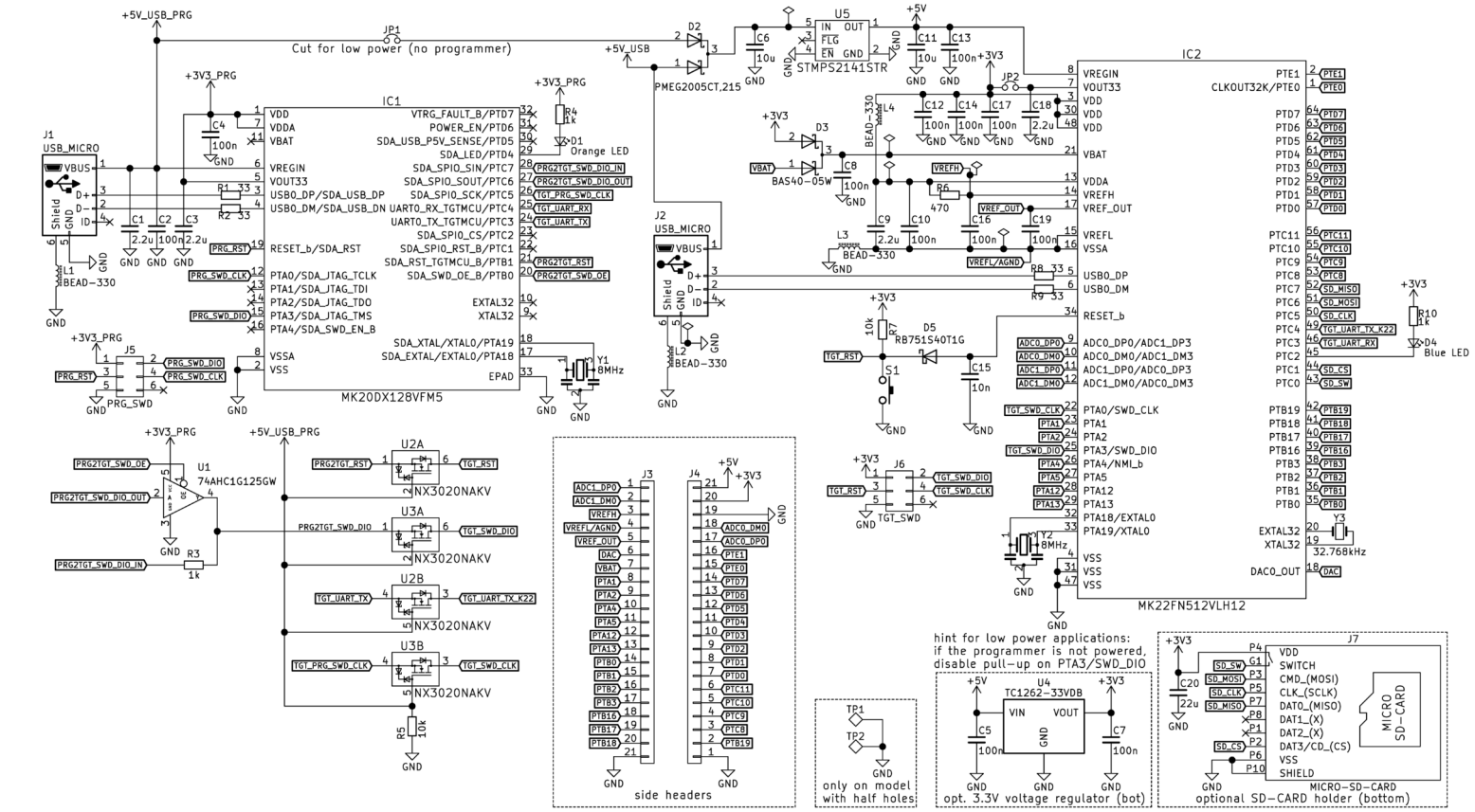

Cut for low power (no programmer)
+5V_USB_PRG
+3V3_PRG
+5V_USB
+5V
+3V3
IC1
MK20DX128VFM5
IC2
MK22FN512VLH12
J1
USB_MICRO
J2
USB_MICRO
J5
PRG_SWD
U1
74AHC1G125GW
U2A
U3A
U2B
U3B
NX3020NAKV
U5
STMPS2141STR
PMEG2005CT,215
BAS40-05W
RB751S40T1G
TC1262-33VDB
Y1
8MHz
Y2
8MHz
Y3
32.768kHz
D1
Orange LED
D4
Blue LED
J3
J4
side headers
J6
TGT_SWD
TP1
TP2
only on model
with half holes
hint for low power applications:
if the programmer is not powered,
disable pull-up on PTA3/SWD_DIO
opt. 3.3V voltage regulator (bot)
J7
MICRO SD-CARD
MICRO-SD-CARD
optional SD-CARD holder (bottom)