Controller

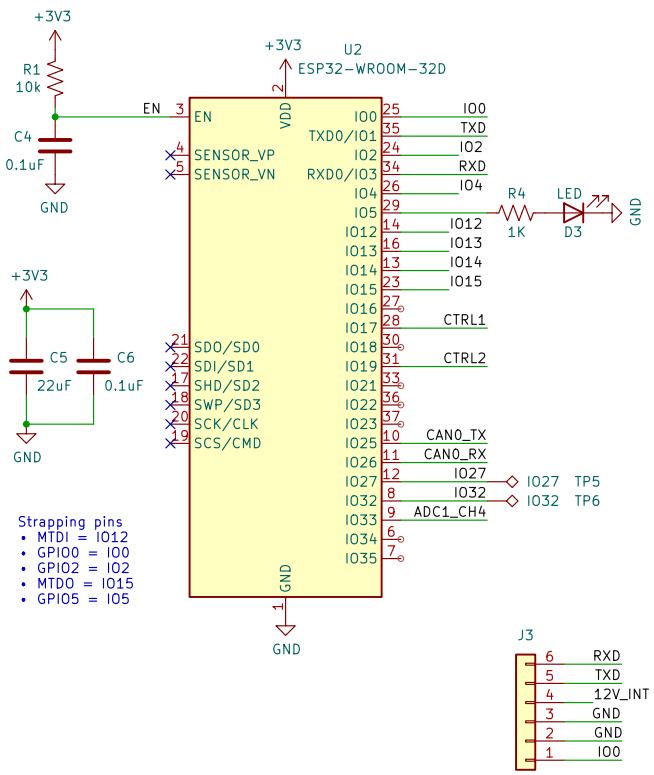

3V3 REG

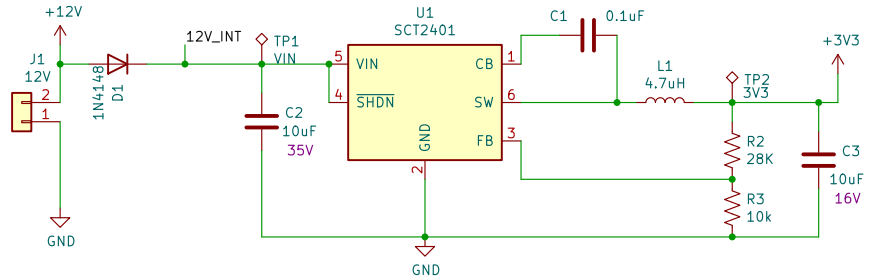

https://webench.ti.com/appinfo/webench/scripts/SDP.cgi?ID=33B1B603ACD595AA

CAN Transceiver

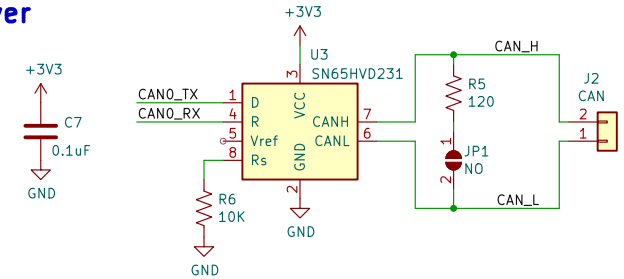

SD Card

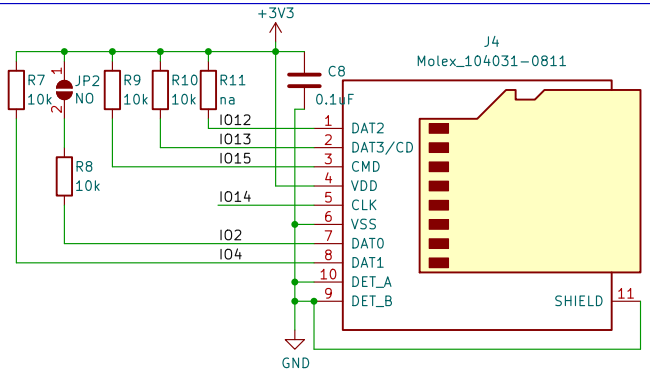

VBAT Sense

??