© COPYRIGHT: This drawing is confidential
It must not be copied or disclosed without written consent

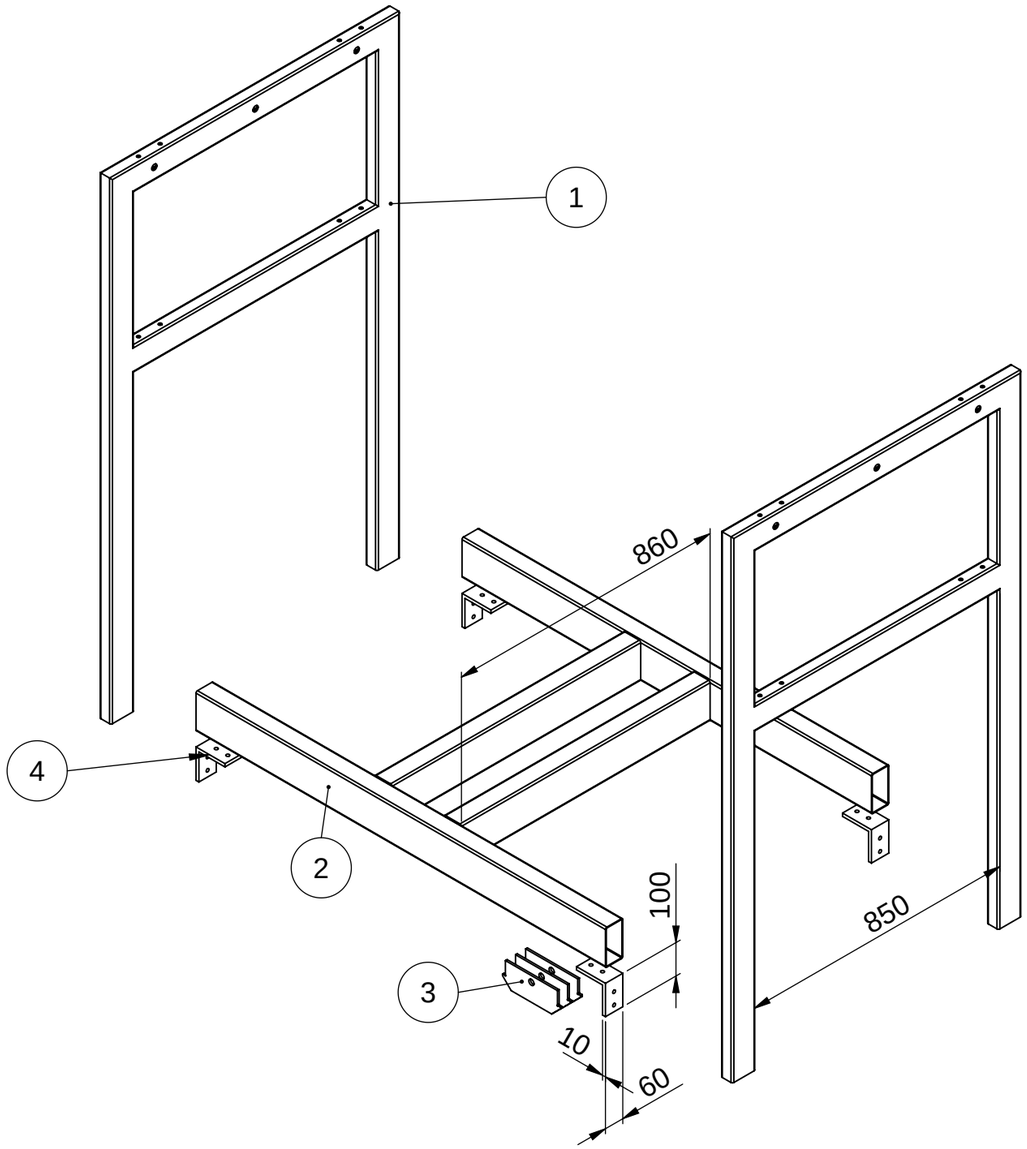

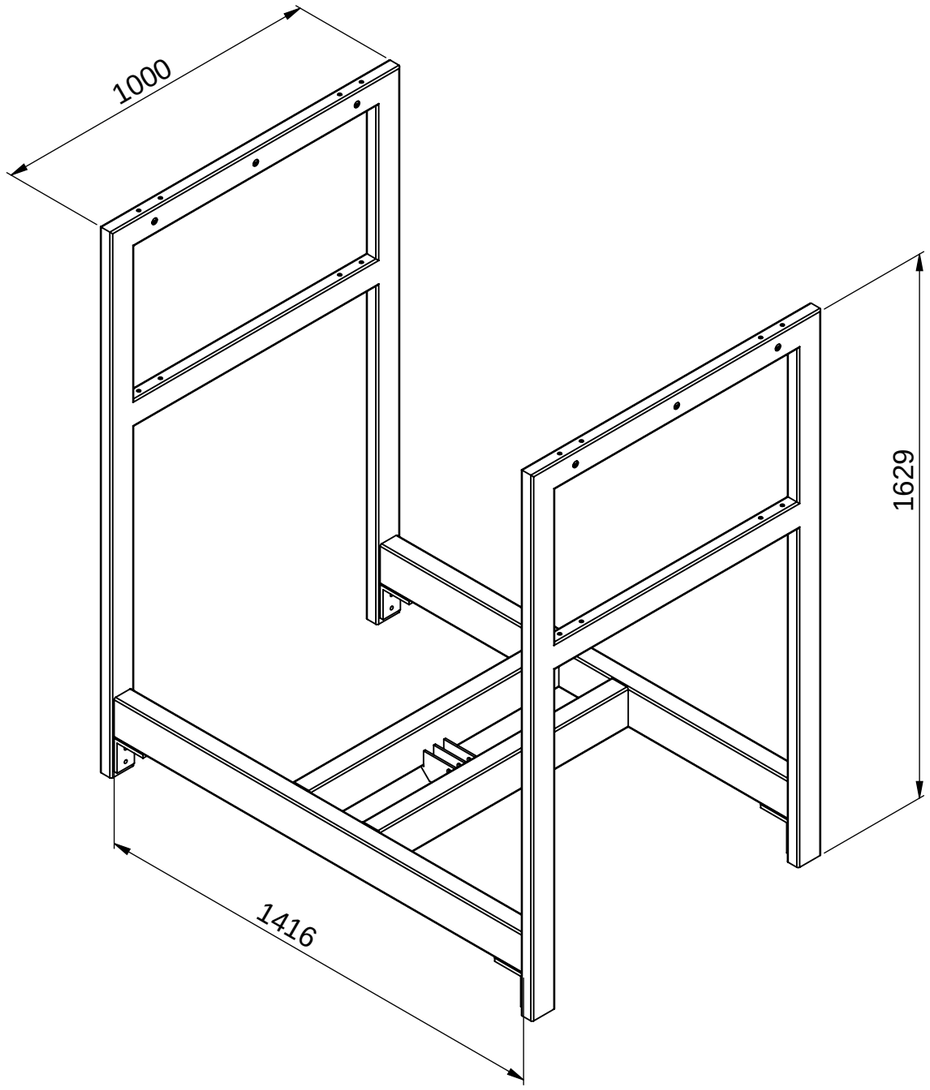

ITEM NO.	PART NUMBER		QTY.
1	SPR-V1_1000.01-A_Side_frame		2
2	SPR-V1_0000.01-A_Bottom_Frame		1
3	SPR-V1_0000.01-A_Jack mount_lower	NOT ORDERED	3
4	SPR-V1_1000.001-A_Angle_Bracket		4

THIRD ANGLE PROJECTION

UNLESS OTHERWISE SPECIFIED
DIMENSIONS ARE IN MILLIMETERS
TOLERANCES ARE:
LINEAR ± -
ANGULAR ± -

APPROVALS		DATE
DRAWN	-	00XXX05
CHECKED	-	-

Plastic Hub Catalunya
Catalunya
Email cgoflyn@gmail.com
https://www.instagram.com/plastichubcat/

PART NO: **SPR-V1_0000.00-A_Sheetpress_Frame**		REV. **01-A**
PART NAME:		SIZE: A3
MATERIAL:	COLOUR: -	SCALE: 1:15
DRAWING FILE: Sheetpress_frame-overview		SHEET 1 OF 1