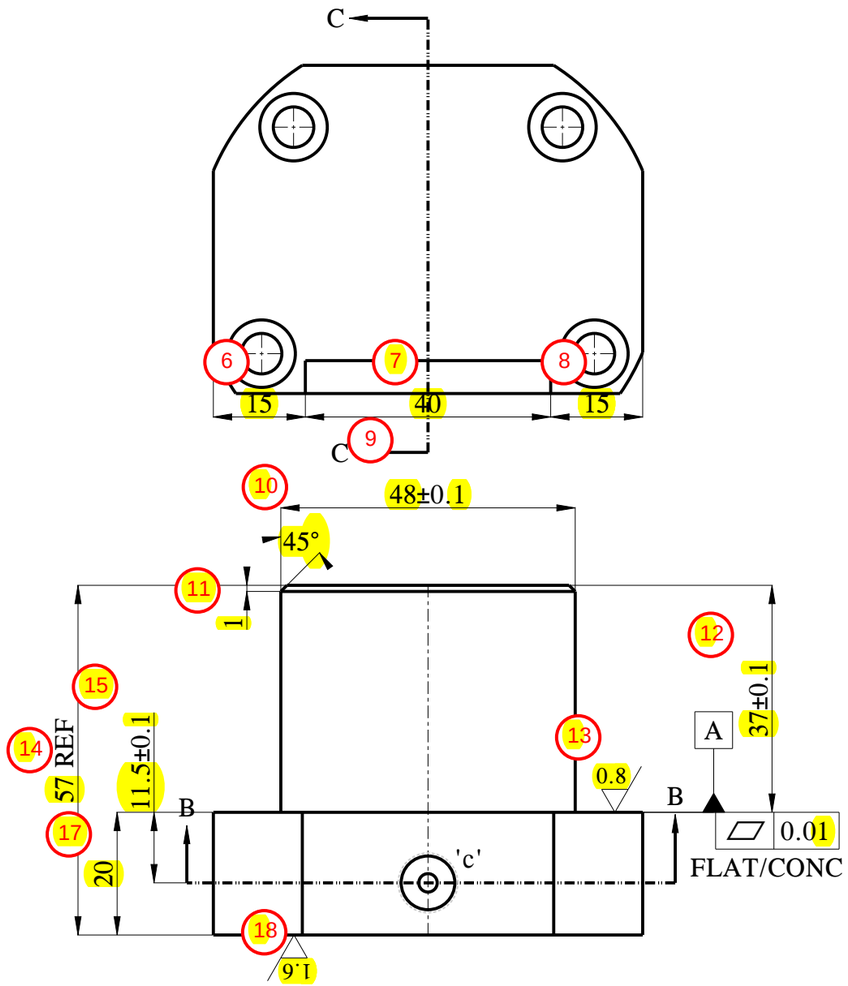

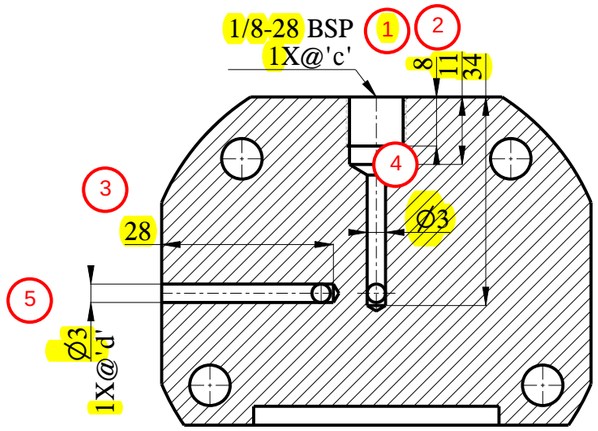

SECTION B-B

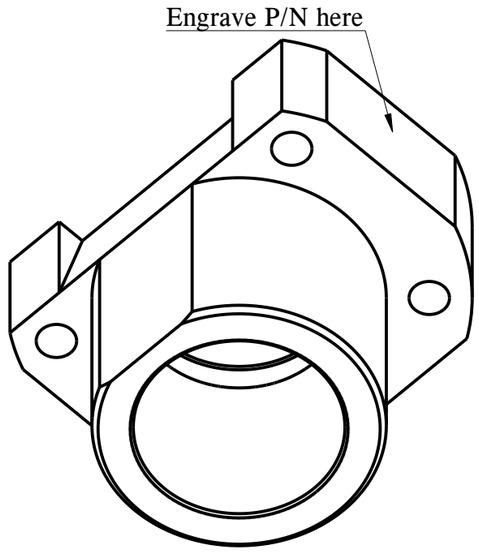

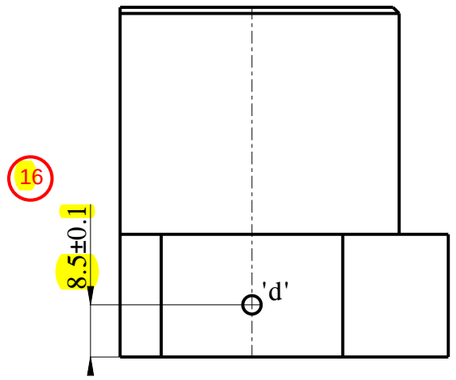

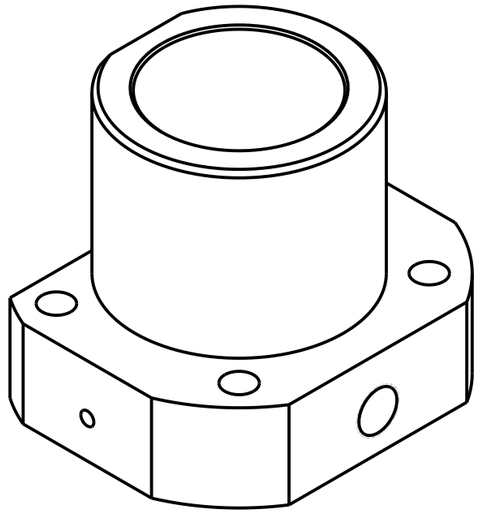

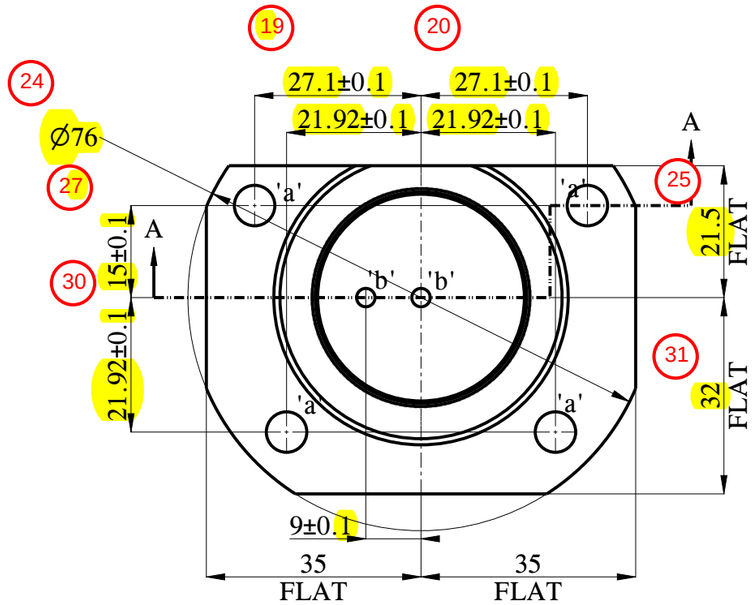

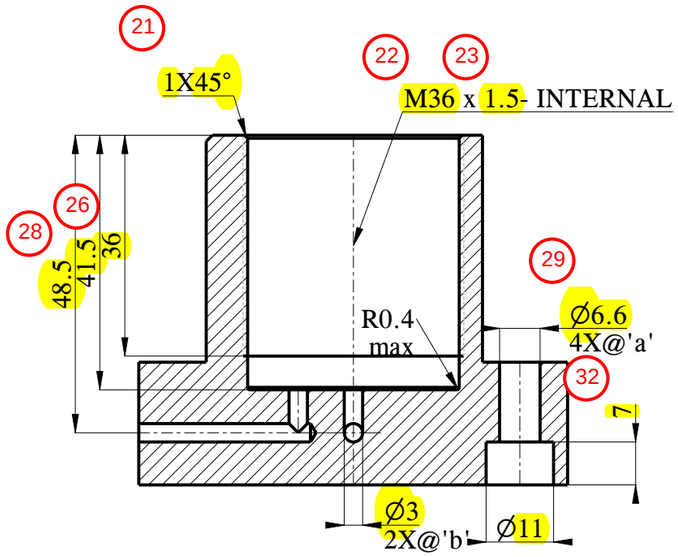

SECTION A-A

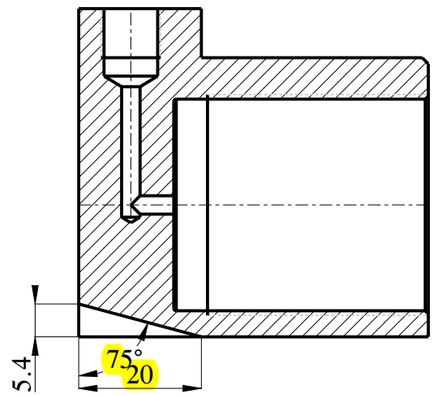

SECTION C-C

SPECIAL NOTE: ENGRAVE P/N NO WITH 3mm TEXT
HEAT TREATMENT: --,
--
SURFACE COATING: TO BE BLACKENED
--

REV	DESCRIPTION	NAME	DATE	AREA
3				
2				
1				

ALLOWABLE DEVIATIONS FOR DIMENSIONS WITH UNSPECIFIED TOLERANCES

LINEAR DIMENSIONS				ANGULAR DIMENSIONS					
		TOLERANCE		LENGTH OF SHORTER SIDE OF ANGLE		TOLERANCE			
						MACHINED PARTS		SHEETMETAL PARTS	
ABOVE	UPTO	MACHINED PARTS	SHEETMETAL PARTS	ABOVE	UPTO	ON SHORTER SIDE	DEGREES OR MINUTES	ON SHORTER SIDE	DEGREES OR MINUTES
0.5	6	±0.1	±0.5						
6	30	±0.2	±1	0	10	±0.1	±1 °	±0.3	±3°
30	120	±0.3	±1.5	10	50	±0.2	±30'	±0.8	±2°
120	315	±0.5	±2	50	120	±0.6	±20'	±1.8	±1'
315	1000	±0.8	±3	120	-	±0.8	±10'	±2.4	±30'
1000	2000	±1.2	±5						

PART NUMBER : 0200-012884

APPROX WEIGHT(Kg):

TITLE: WS_HOUSING_OP10_AP

MATERIAL: MS

FINISHED SIZE: Ø76X57

1) DE-BURR ALL SHARP EDGES & CORNERS. UNLESS SPECIFIED 0.5x45°
2) ALL "H7 TOL." HOLES TO HAVE ENTRY CHAMFER OF 1x30°
3) UNSPECIFIED SURFACE FINISH, MACHINED: 3.2 Ra

INSIGHT
Shaping Imaginations

DRN.:KIRAN
CHD.:SRINIVAS
DATE:

SCALE: 0.5

FIRST ANGLE

SHT: 1/1