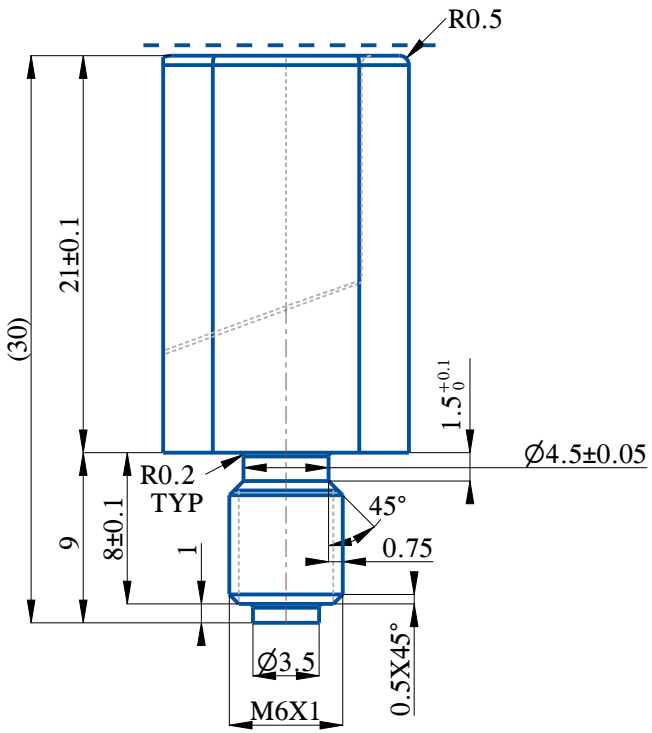

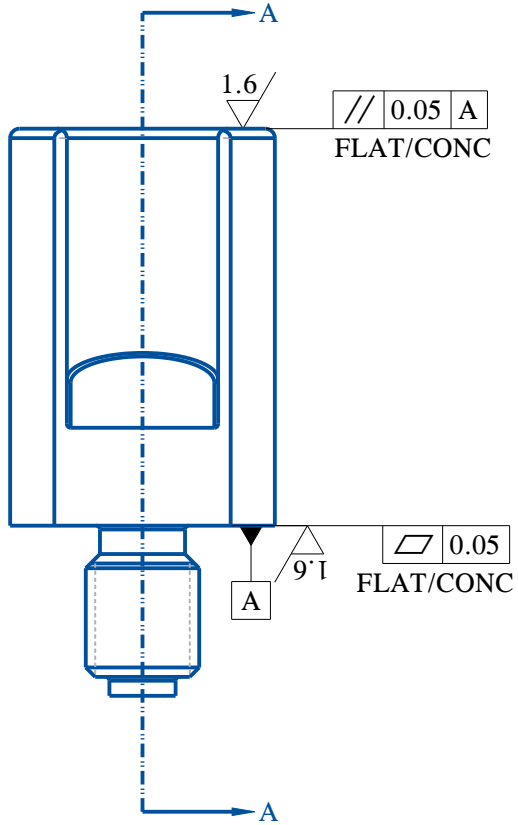

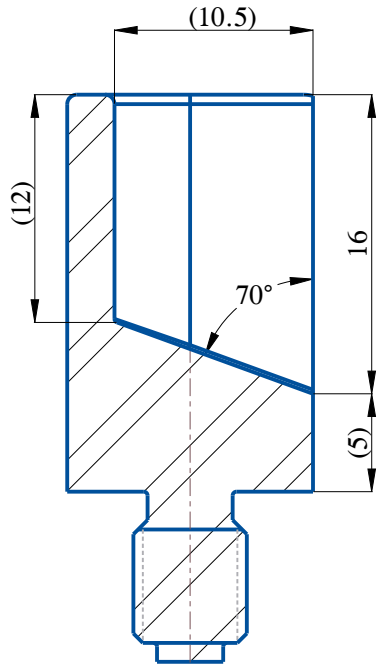

SECTION A-A

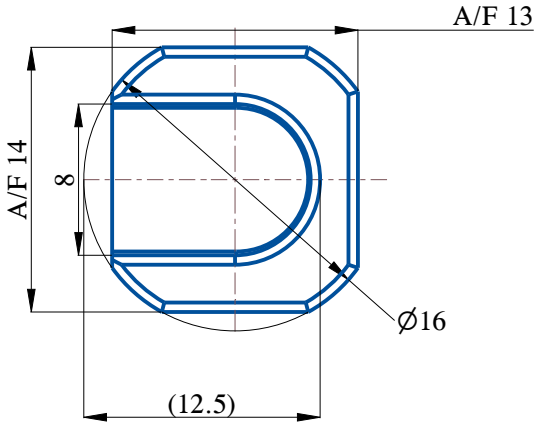

ROUNDOFF ALL THE SHARP EDGES ON THIS FACE

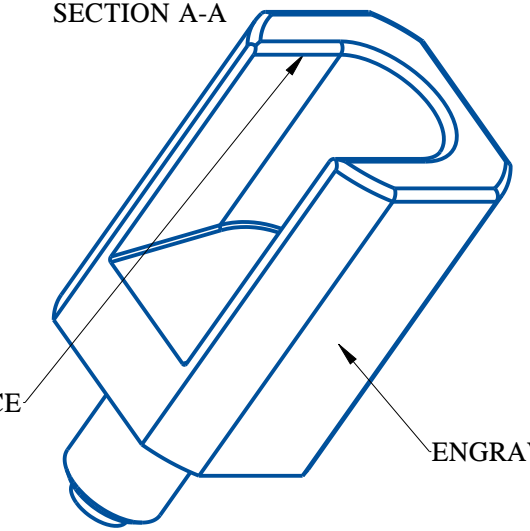

SPECIAL NOTE: ENGRAVE P/N NO WITH 3mm TEXT
HEAT TREATMENT: FLAME HARDENED TO 55HRC,

----- HARDENING LINE

SURFACE COATING: TO BE BLACKENED

--

REV	DESCRIPTION	NAME	DATE	AREA
3				
2				
1				

ALLOWABLE DEVIATIONS FOR DIMENSIONS WITH UNSPECIFIED TOLERANCES

LINEAR DIMENSIONS				ANGULAR DIMENSIONS					
ABOVE	UPTO	TOLERANCE		LENGTH OF SHORTER SIDE OF ANGLE		TOLERANCE			
		MACHINED PARTS	SHEETMETAL PARTS			MACHINED PARTS		SHEETMETAL PARTS	
				ABOVE	UPTO	ON SHORTER SIDE	DEGREES OR MINUTES	ON SHORTER SIDE	DEGREES OR MINUTES
0.5	6	±0.1	±0.5	0	10	±0.1	±1 °	±0.3	±3°
6	30	±0.2	±1	10	50	±0.2	±30'	±0.8	±2°
30	120	±0.3	±1.5	50	120	±0.6	±20'	±1.8	±1°
120	315	±0.5	±2	120	-	±0.8	±10'	±2.4	±30'
315	1000	±0.8	±3						
1000	2000	±1.2	±5						

PART NUMBER : 0200-012952

APPROX WEIGHT(Kg): 0.021

TITLE: WS_PIN_CSY_MULTI_AL

MATERIAL: C45+N

FINISHED SIZE: Ø16X30

1) DE-BURR ALL SHARP EDGES & CORNERS. UNLESS SPECIFIED 0.5x45°
2) ALL "H7 TOL." HOLES TO HAVE ENTRY CHAMFER OF 1x30°
3) UNSPECIFIED SURFACE FINISH, MACHINED: 3.2 Ra

INSIGHT
Shaping Imaginations

DRN.:PP
CHD.:PP
DATE:

SCALE: 2.5

FIRST ANGLE

SHT: 1/1