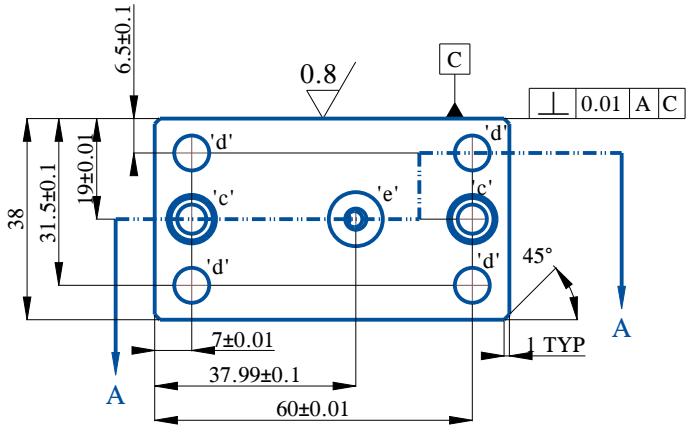

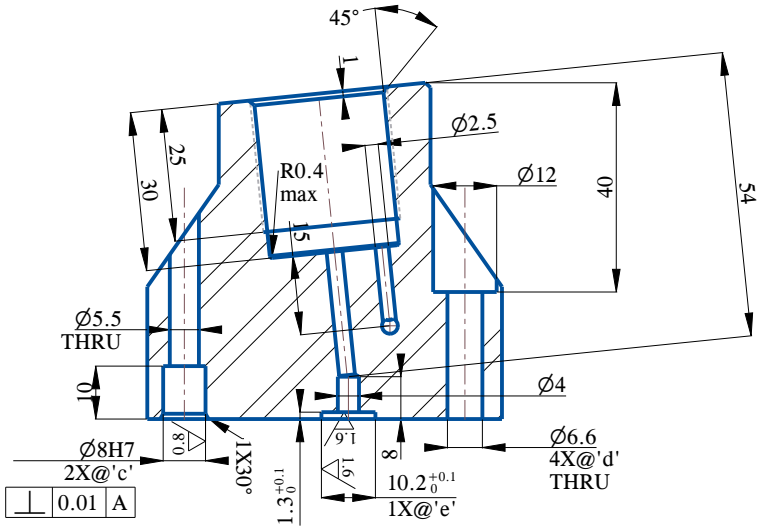

SECTION A-A

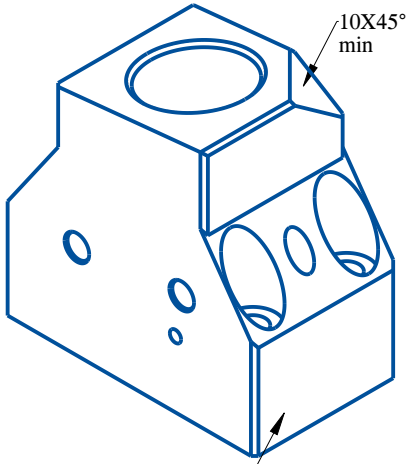

ENGRAVE P/N HERE

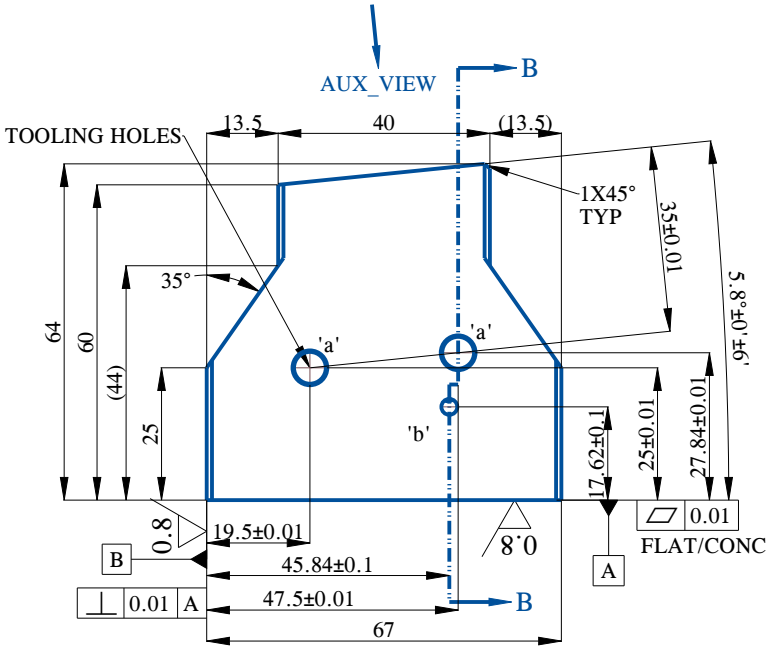

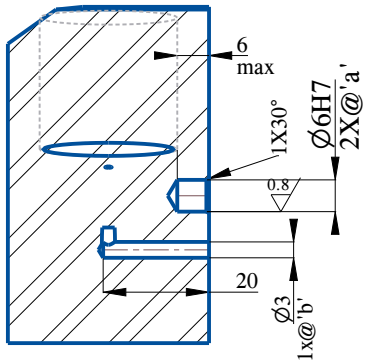

SECTION B-B

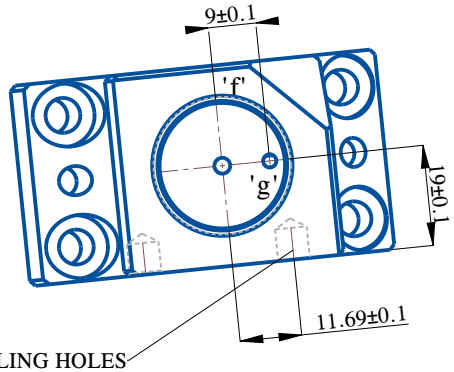

AUX_VIEW

SPECIAL NOTE: ENGRAVE P/N NO WITH 3mm TEXT
HEAT TREATMENT: --,

--

SURFACE COATING: TO BE BLACKENED

--

REV	DESCRIPTION	NAME	DATE	AREA
3				
2				
1				

ALLOWABLE DEVIATIONS FOR DIMENSIONS WITH UNSPECIFIED TOLERANCES

LINEAR DIMENSIONS				ANGULAR DIMENSIONS					
ABOVE	UPTO	TOLERANCE		LENGTH OF SHORTER SIDE OF ANGLE		TOLERANCE			
		MACHINED PARTS	SHEETMETAL PARTS			MACHINED PARTS		SHEETMETAL PARTS	
				ABOVE	UPTO	ON SHORTER SIDE	DEGREES OR MINUTES	ON SHORTER SIDE	DEGREES OR MINUTES
0.5	6	±0.1	±0.5						
6	30	±0.2	±1						
30	120	±0.3	±1.5	0	10	±0.1	±1 °	±0.3	±3°
120	315	±0.5	±2	10	50	±0.2	±30'	±0.8	±2°
315	1000	±0.8	±3	50	120	±0.6	±20'	±1.8	±1°
1000	2000	±1.2	±5	120	-	±0.8	±10'	±2.4	±30'

PART NUMBER : 0200-012900

APPROX WEIGHT(Kg): 0.807

TITLE: WS_ANGLED_CSY00_ANGLED_AH

MATERIAL: MS

FINISHED SIZE: 38X64X67

1) DE-BURR ALL SHARP EDGES & CORNERS. UNLESS SPECIFIED 0.5x45°
2) ALL "H7 TOL." HOLES TO HAVE ENTRY CHAMFER OF 1x30°
3) UNSPECIFIED SURFACE FINISH, MACHINED: 3.2 Ra

INSIGHT
Shaping Imaginations

DRN.:MAYUR
CHD.:APSAR
DATE:

SCALE: 0.7

FIRST ANGLE

SHT: 1/1