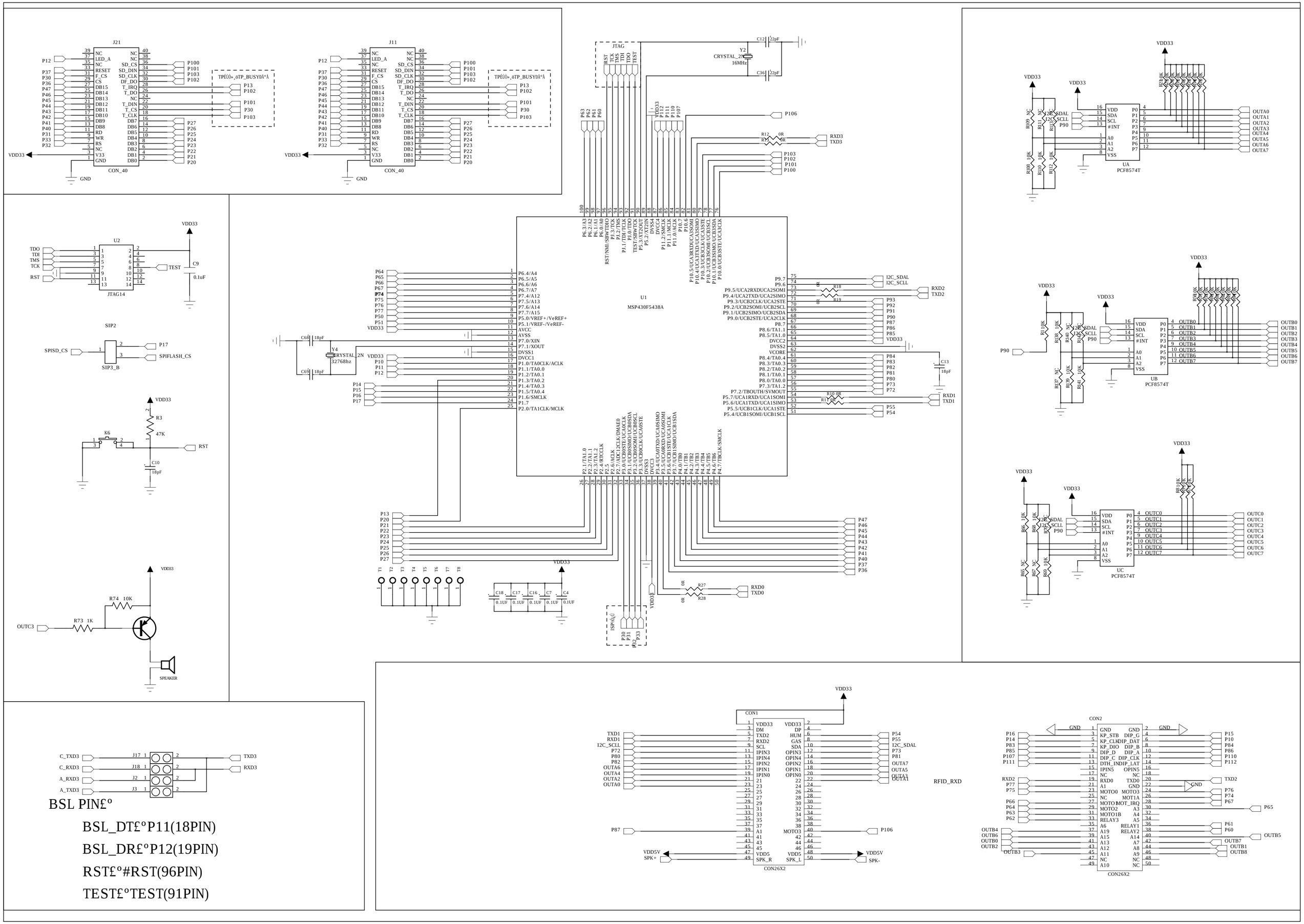
J21
J11
CON_40
U1
MSP430F5438A
U2
JTAG14
SIP2
SIP3_B
K6
R3
47K
C10
18pF
R74 10K
R73 1K
OUTC3
SPEAKER
Y2
CRYSTAL_2N
16MHz
C12 22pF
C36 22pF
Y4
CRYSTAL_2N
32768hz
C68 18pF
C69 18pF
C9
0.1uF
TEST
RST
VDD33
GND
UA
PCF8574T
UB
PCF8574T
UC
PCF8574T
CON1
CON26X2
CON2
CON26X2
RXD3
TXD3
RXD2
TXD2
RXD1
TXD1
RXD0
TXD0
I2C_SDAL
I2C_SCLL
RFID_RXD
BSL PIN£º
BSL_DT£ºP11(18PIN)
BSL_DR£ºP12(19PIN)
RST£º#RST(96PIN)
TEST£ºTEST(91PIN)

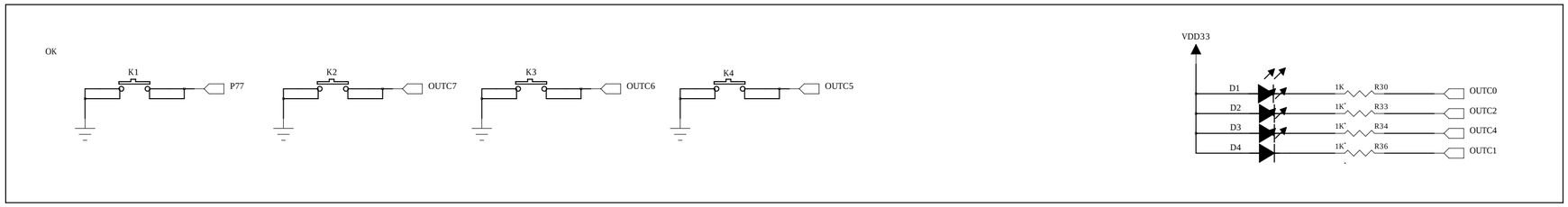
OK
K1
P77
K2
OUTC7
K3
OUTC6
K4
OUTC5
VDD33
D1
D2
D3
D4
1K
R30
R33
R34
R36
OUTC0
OUTC2
OUTC4
OUTC1

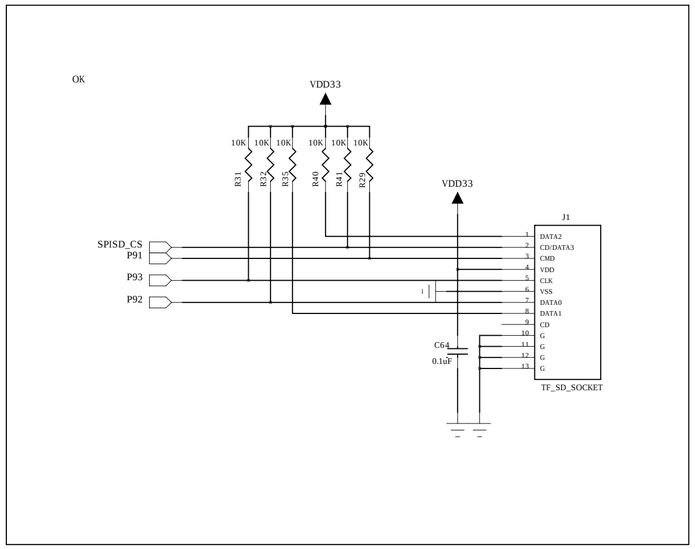
OK
VDD33
10K
R31
R32
R33
R40
R41
R39
SPISD_CS
P91
P93
P92
J1
DATA2
CD/DATA3
CMD
VDD
CLK
VSS
DATA0
DATA1
CD
G
C64
0.1uF
TF_SD_SOCKET

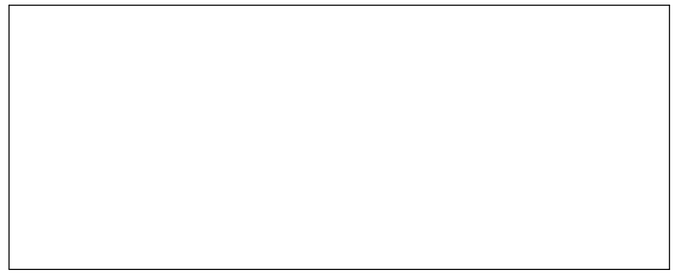

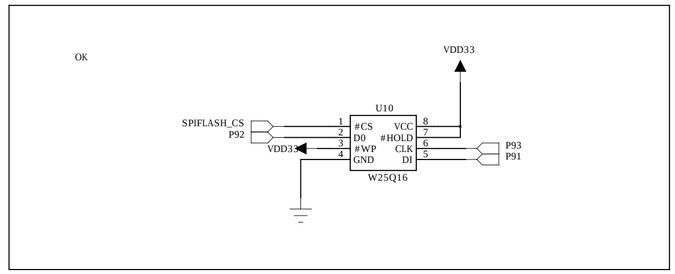
OK
VDD33
SPIFLASH_CS
P92
U10
#CS
D0
#WP
GND
VCC
#HOLD
CLK
DI
W25Q16
P93
P91

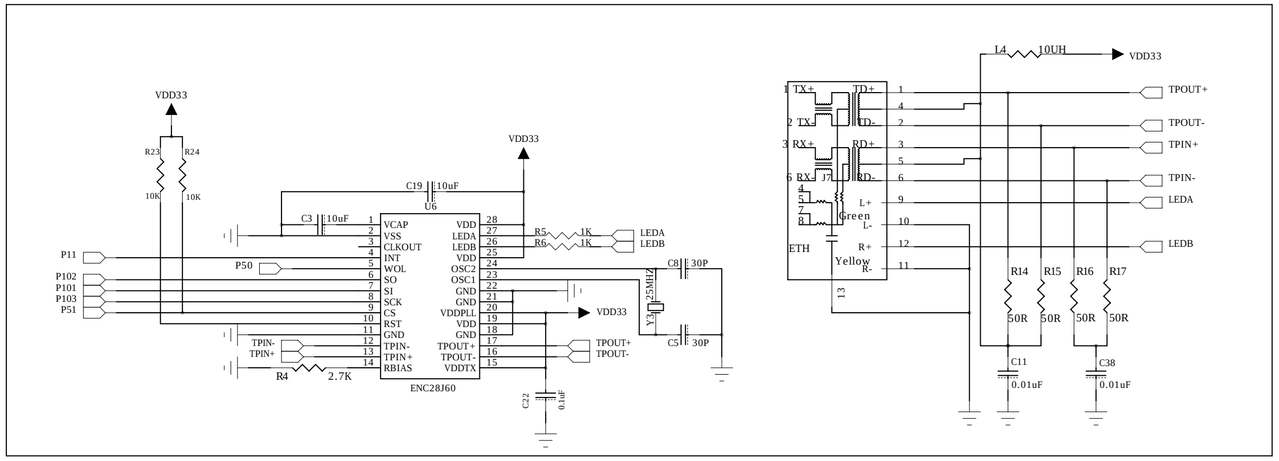
VDD33
R23
R24
10K
P11
P50
P102
P101
P103
P51
C19
10uF
U6
C3
VCAP
VSS
CLKOUT
INT
WOL
SO
SI
SCK
CS
RST
GND
TPIN-
TPIN+
RBIAS
VDD
LEDA
LEDB
OSC2
OSC1
VDDPLL
TPOUT+
TPOUT-
VDDTX
R5
R6
1K
C8
30P
25MHZ
Y3
C5
R4
2.7K
C22
0.1uF
ENC28J60
L4
10UH
TX+
TX-
RX+
RX-
TD+
TD-
RD+
RD-
J7
Green
Yellow
ETH
R14
R15
R16
R17
50R
C11
C38
0.01uF

OK

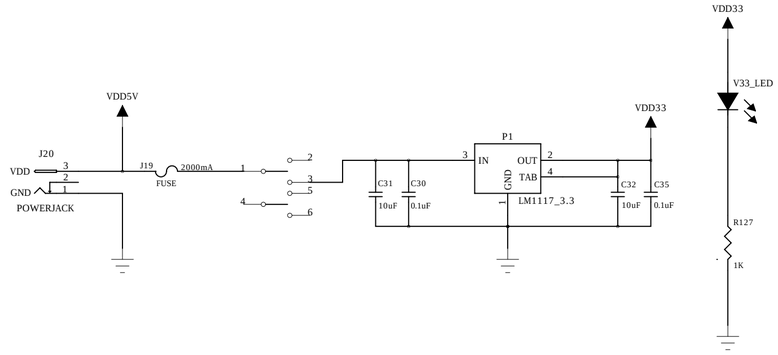
VDD5V
J20
VDD
GND
POWERJACK
J19
2000mA
FUSE
P1
IN
OUT
TAB
GND
LM1117_3.3
C31
10uF
C30
0.1uF
C32
10uF
C35
0.1uF
VDD33
V33_LED
R127
1K

OK

OK

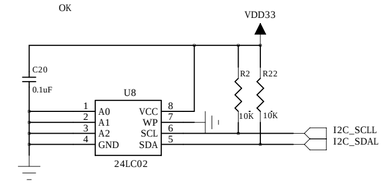
VDD33
C20
0.1uF
U8
A0
A1
A2
GND
VCC
WP
SCL
SDA
24LC02
R2
10K
R22
10K
I2C_SCLL
I2C_SDAL

OK

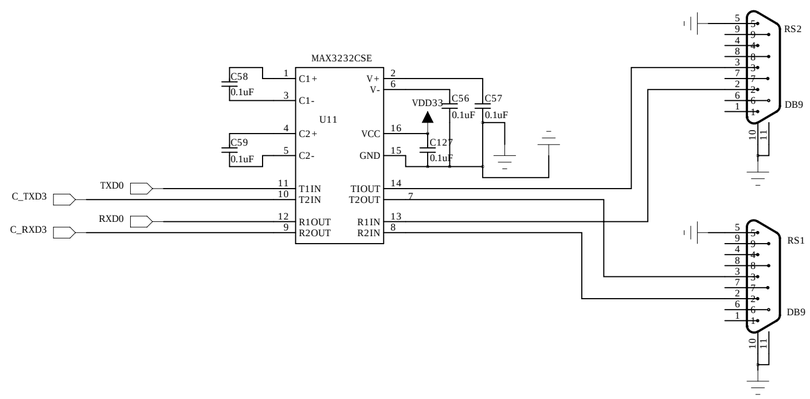
MAX3232CSE
U11
C58
0.1uF
C59
0.1uF
C1+
C1-
C2+
C2-
V+
V-
VCC
GND
T1IN
T2IN
R1OUT
R2OUT
T1OUT
T2OUT
R1IN
R2IN
VDD33
C56
0.1uF
C57
0.1uF
C127
0.1uF
TXD0
RXD0
C_TXD3
C_RXD3
RS2
RS1
DB9
DB9

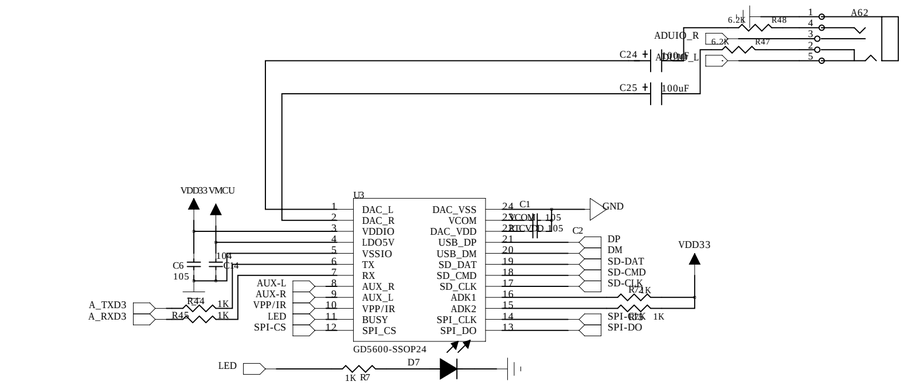
U3
GD5600-SSOP24
DAC_L
DAC_R
VDDIO
LDO5V
VSSIO
TX
RX
AUX_R
AUX_L
VPP/IR
BUSY
SPI_CS
DAC_VSS
VCOM
DAC_VDD
USB_DP
USB_DM
SD_DAT
SD_CMD
SD_CLK
ADK1
ADK2
SPI_CLK
SPI_DO
GND
DP
DM
SD-DAT
SD-CMD
SD-CLK
SPI-CLK
SPI-DO
VDD33
VMCU
C6
105
C14
A_TXD3
A_RXD3
R44
R45
1K
AUX-L
AUX-R
VPP/IR
LED
SPI-CS
LED
1K R7
D7
A62
ADUIO_R
ADUIO_L
6.2K
R48
R47
C24
C25
100uF

MCU

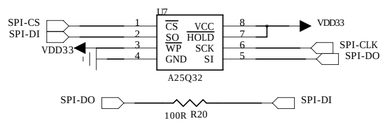
U7
A25Q32
SPI-CS
SPI-DI
VDD33
CS
SO
WP
GND
VCC
HOLD
SCK
SI
SPI-CLK
SPI-DO
SPI-DO
100R R20
SPI-DI

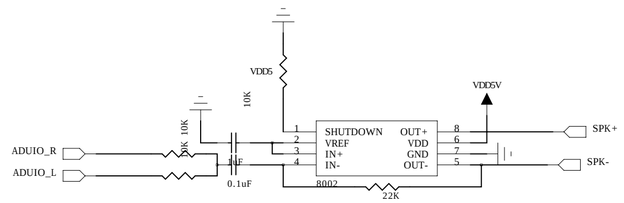
VDD5
10K
VDD5V
ADUIO_R
ADUIO_L
10K
1uF
0.1uF
SHUTDOWN
VREF
IN+
IN-
OUT+
VDD
GND
OUT-
8002
22K
SPK+
SPK-

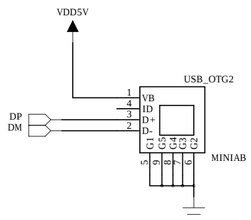
VDD5V
USB_OTG2
DP
DM
VB
ID
D+
D-
MINIAB

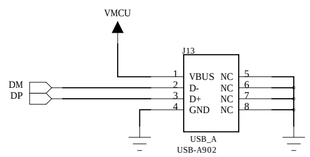
VMCU
J13
USB_A
USB-A902
DM
DP
VBUS
D-
D+
GND
NC

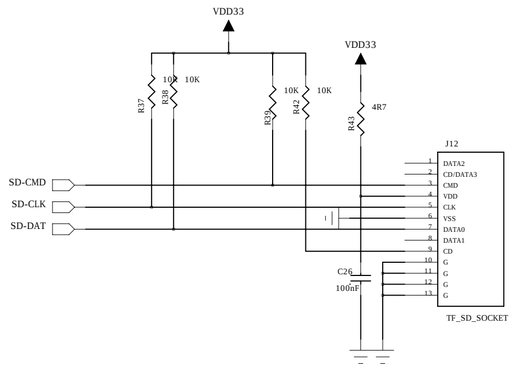
VDD33
VDD33
R37
R38
10K
R39
R42
R43
4R7
J12
SD-CMD
SD-CLK
SD-DAT
DATA2
CD/DATA3
CMD
VDD
CLK
VSS
DATA0
DATA1
CD
G
C26
100nF
TF_SD_SOCKET