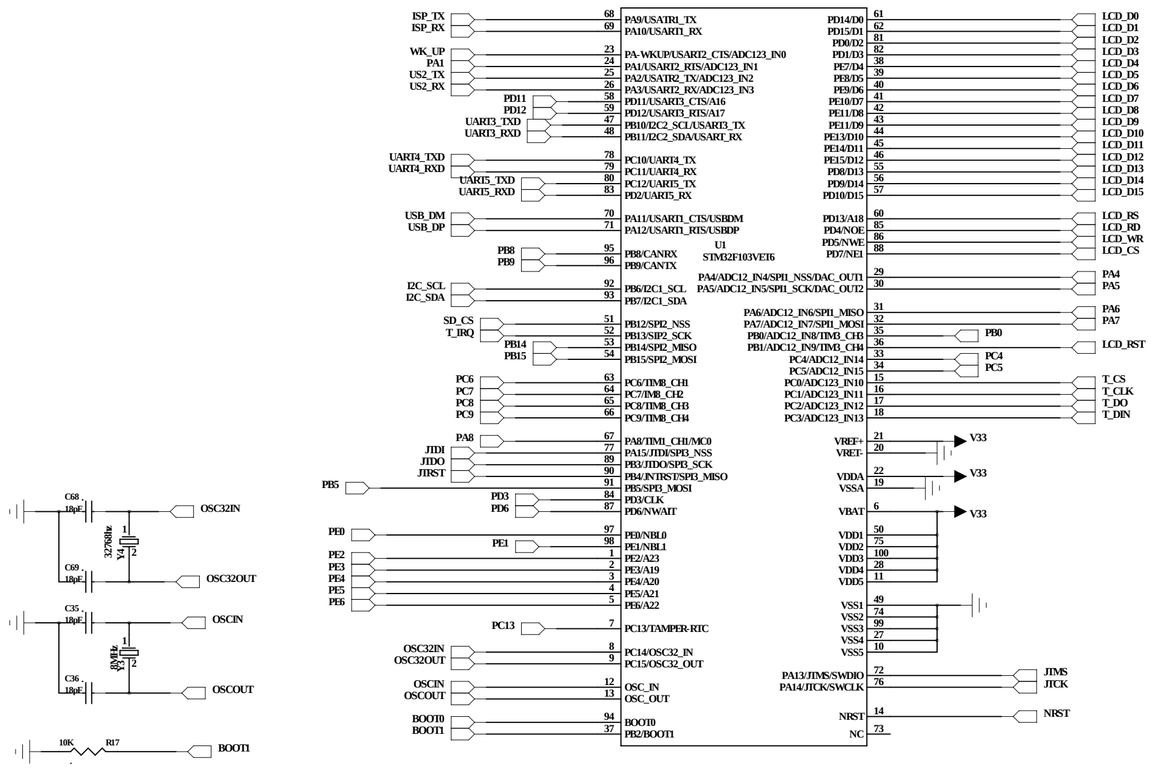
U1
STM32F103VET6
PA9/USATR1_TX
PA10/USART1_RX
PA-WKUP/USART2_CTS/ADC123_IN0
PA1/USART2_RTS/ADC123_IN1
PA2/USATR2_TX/ADC123_IN2
PA3/USART2_RX/ADC123_IN3
PD11/USART3_CTS/A16
PD12/USART3_RTS/A17
PB10/I2C2_SCL/USART3_TX
PB11/I2C2_SDA/USARI_RX
PC10/UART4_TX
PC11/UART4_RX
PC12/UARI5_TX
PD2/UARI5_RX
PA11/USART1_CTS/USBDM
PA12/USART1_RTS/USBDP
PB8/CANRX
PB9/CANTX
PB6/I2C1_SCL
PB7/I2C1_SDA
PB12/SPI2_NSS
PB13/SIP2_SCK
PB14/SPI2_MISO
PB15/SPI2_MOSI
PC6/TIM8_CH1
PC7/IM8_CH2
PC8/TIM8_CH3
PC9/TIM8_CH4
PA8/TIM1_CH1/MC0
PA15/JTDI/SPI3_NSS
PB3/JTDO/SPI3_SCK
PB4/NTRST/SPI3_MISO
PB5/SPI3_MOSI
PD3/CLK
PD6/NWAIT
PE0/NBL0
PE1/NBL1
PE2/A23
PE3/A19
PE4/A20
PE5/A21
PE6/A22
PC13/TAMPER-RTC
PC14/OSC32_IN
PC15/OSC32_OUT
OSC_IN
OSC_OUT
BOOT0
PB2/BOOT1
PD14/D0
PD15/D1
PD0/D2
PD1/D3
PE7/D4
PE8/D5
PE9/D6
PE10/D7
PE11/D8
PE11/D9
PE13/D10
PE14/D11
PE15/D12
PD8/D13
PD9/D14
PD10/D15
PD13/A18
PD4/NOE
PD5/NWE
PD7/NE1
PA4/ADC12_IN4/SPI1_NSS/DAC_OUT1
PA5/ADC12_IN5/SPI1_SCK/DAC_OUT2
PA6/ADC12_IN6/SPI1_MISO
PA7/ADC12_IN7/SPI1_MOSI
PB0/ADC12_IN8/TIM3_CH3
PB1/ADC12_IN9/TIM3_CH4
PC4/ADC12_IN14
PC5/ADC12_IN15
PC0/ADC123_IN10
PC1/ADC123_IN11
PC2/ADC123_IN12
PC3/ADC123_IN13
VREF+
VREF-
VDDA
VSSA
VBAT
VDD1
VDD2
VDD3
VDD4
VDD5
VSS1
VSS2
VSS3
VSS4
VSS5
PA13/JTMS/SWDIO
PA14/JTCK/SWCLK
NRST
NC
LCD_D0
LCD_D1
LCD_D2
LCD_D3
LCD_D4
LCD_D5
LCD_D6
LCD_D7
LCD_D8
LCD_D9
LCD_D10
LCD_D11
LCD_D12
LCD_D13
LCD_D14
LCD_D15
LCD_RS
LCD_RD
LCD_WR
LCD_CS
PA4
PA5
PA6
PA7
PB0
LCD_RST
PC4
PC5
T_CS
T_CLK
T_DO
T_DIN
V33
ISP_TX
ISP_RX
WK_UP
PA1
US2_TX
US2_RX
UART4_TXD
UART4_RXD
UARI5_TXD
UARI5_RXD
USB_DM
USB_DP
I2C_SCL
I2C_SDA
SD_CS
T_IRQ
JTDI
JTDO
JTRST
OSC32IN
OSC32OUT
OSCIN
OSCOUT
BOOT1
JTMS
JTCK
NRST

C68
18pF
C69
18pF
32.768Hz
Y4
OSC32IN
OSC32OUT
C35
18pF
C36
18pF
8MHz
Y3
OSCIN
OSCOUT
10K
R17
BOOT1

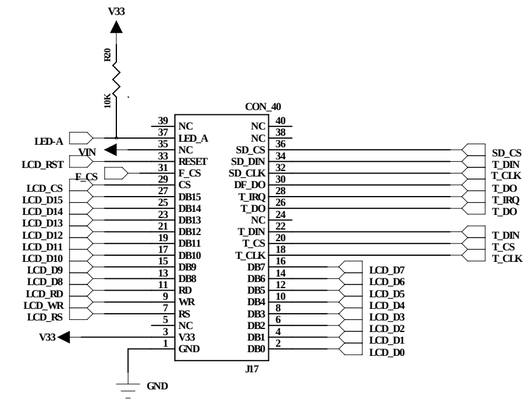
V33
R20
10K
CON_40
J17
LED-A
VIN
LCD_RST
F_CS
LCD_CS
LCD_D15
LCD_D14
LCD_D13
LCD_D12
LCD_D11
LCD_D10
LCD_D9
LCD_D8
LCD_RD
LCD_WR
LCD_RS
NC
RESET
CS
DB15
DB14
DB13
DB12
DB11
DB10
DB9
DB8
RD
WR
RS
V33
GND
SD_CS
SD_DIN
SD_CLK
DF_DO
T_IRQ
T_DO
T_DIN
T_CS
T_CLK
DB7
DB6
DB5
DB4
DB3
DB2
DB1
DB0
GND

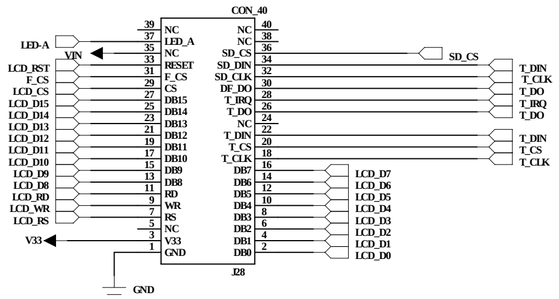
CON_40
J28
LED-A
VIN
LCD_RST
F_CS
LCD_CS
LCD_D15
LCD_D14
LCD_D13
LCD_D12
LCD_D11
LCD_D10
LCD_D9
LCD_D8
LCD_RD
LCD_WR
LCD_RS
V33
GND
NC
RESET
CS
DB15
DB14
DB13
DB12
DB11
DB10
DB9
DB8
RD
WR
RS
SD_CS
SD_DIN
SD_CLK
DF_DO
T_IRQ
T_DO
T_DIN
T_CS
T_CLK
DB7
DB6
DB5
DB4
DB3
DB2
DB1
DB0

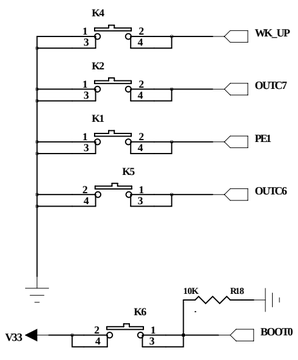
K4
WK_UP
K2
OUTC7
K1
PE1
K5
OUTC6
K6
BOOT0
10K
R18
V33

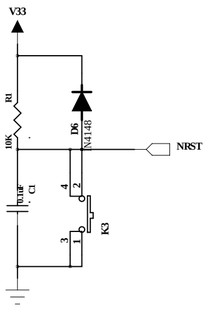
V33
R1
10K
D6
N4148
NRST
C1
0.1uF
K3

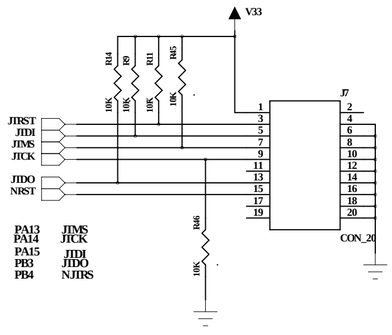
V33
R14
R9
R11
R45
10K
J7
CON_20
JTRST
JTDI
JTMS
JTCK
JTDO
NRST
PA13 JTMS
PA14 JTCK
PA15 JTDI
PB3 JTDO
PB4 NJTRS
R46

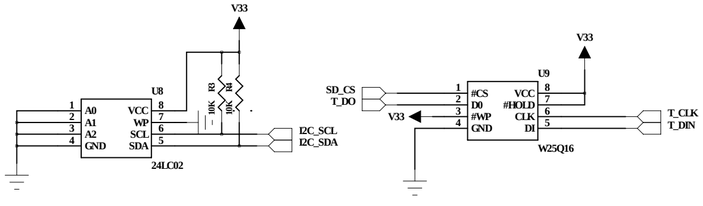
V33
U8
24LC02
A0
A1
A2
GND
VCC
WP
SCL
SDA
R3
R4
10K
I2C_SCL
I2C_SDA
U9
W25Q16
SD_CS
T_DO
#CS
D0
#WP
GND
VCC
#HOLD
CLK
DI
T_CLK
T_DIN

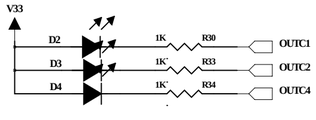
V33
D2
D3
D4
1K
R30
R33
R34
OUTC1
OUTC2
OUTC4

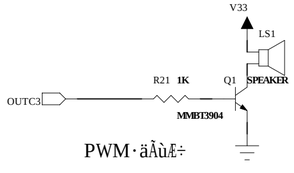
V33
LS1
SPEAKER
OUTC3
R21
1K
Q1
MMBT3904

PWM·äÅùÆ÷

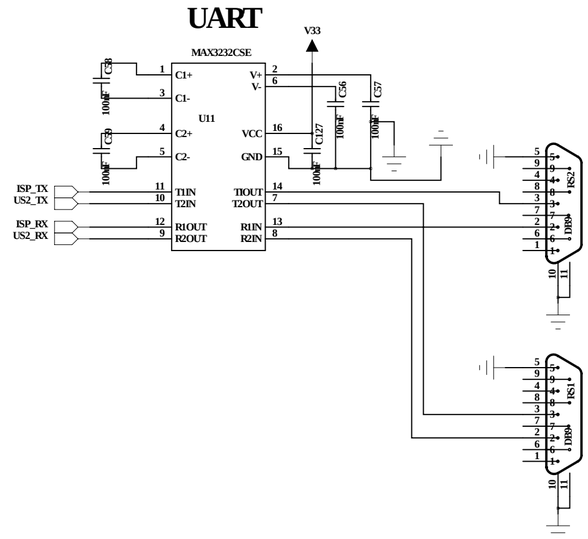
UART
MAX3232CSE
U11
V33
C1+
C1-
C2+
C2-
VCC
GND
V+
V-
T1IN
T2IN
R1OUT
R2OUT
T1OUT
T2OUT
R1IN
R2IN
C38
C39
C56
C57
C127
100nF
ISP_TX
US2_TX
ISP_RX
US2_RX
DB9
RS2
RS1

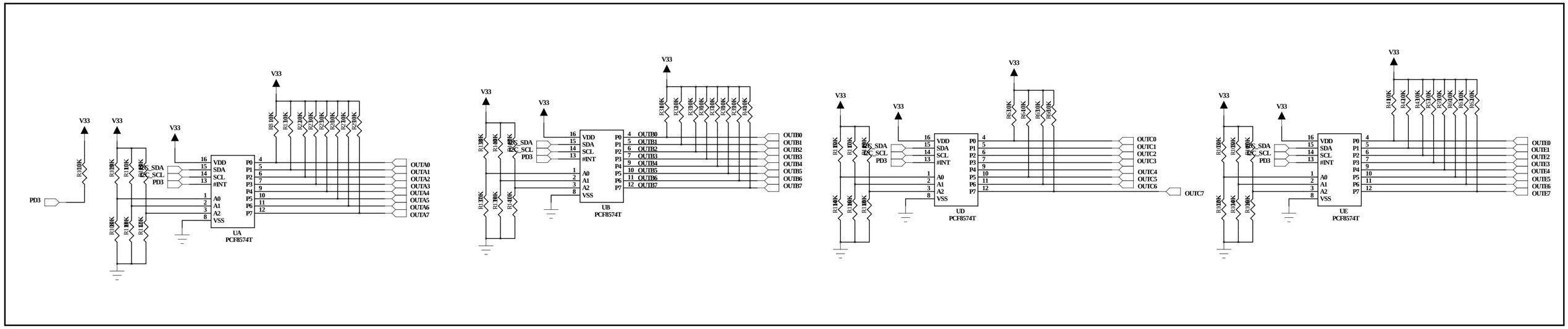
UA
PCF8574T
UB
PCF8574T
UD
PCF8574T
UE
PCF8574T
V33
PD3
OUTA0
OUTA1
OUTA2
OUTA3
OUTA4
OUTA5
OUTA6
OUTA7
OUTB0
OUTB1
OUTB2
OUTB3
OUTB4
OUTB5
OUTB6
OUTB7
OUTC0
OUTC1
OUTC2
OUTC3
OUTC4
OUTC5
OUTC6
OUTC7
OUTE0
OUTE1
OUTE2
OUTE3
OUTE4
OUTE5
OUTE6
OUTE7

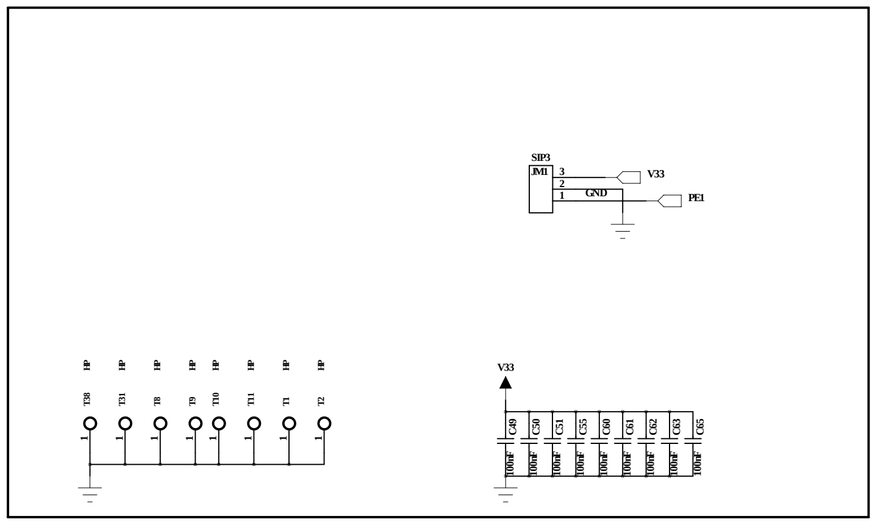
SIP3
JM1
V33
GND
PE1
T38
T31
T8
T9
T10
T11
T1
T2
C49
C50
C51
C55
C60
C61
C62
C63
C65

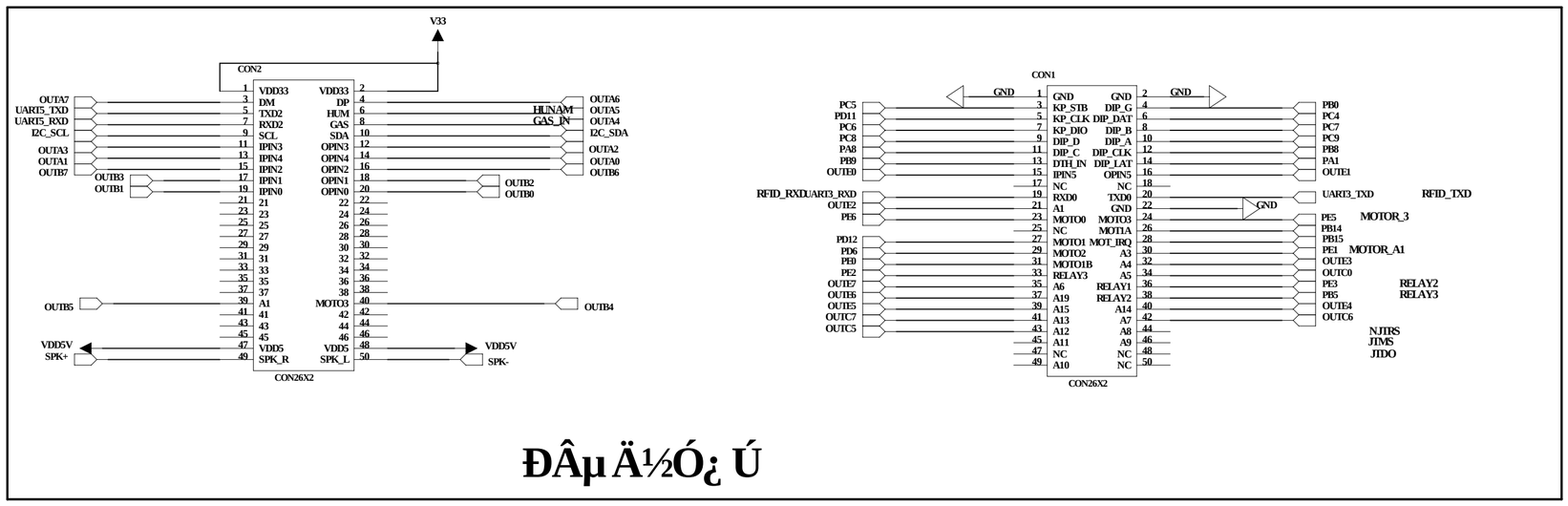
CON2
CON26X2
CON1
CON26X2
V33
VDD5V
SPK+
SPK-
HUNAM
GAS_IN
I2C_SDA
I2C_SCL
UARI5_TXD
UARI5_RXD
OUTA3
OUTA1
OUTB7
OUTB3
OUTB1
OUTB5
OUTB4
OUTB2
OUTB0
OUTA6
OUTA5
OUTA4
OUTA2
OUTA0
OUTB6
GND
PC5
PD11
PC6
PC8
PA8
PB9
OUTE0
RFID_RXD
UARI3_RXD
OUTE2
PE6
PD12
PD6
PE0
PE2
OUTE7
OUTE6
OUTE5
OUTC7
OUTC5
PB0
PC4
PC7
PC9
PB8
PA1
OUTE1
UARI3_TXD
RFID_TXD
PE5
MOTOR_3
PB14
PB15
PE1
MOTOR_A1
OUTE3
OUTC0
PE3
RELAY2
PB5
RELAY3
OUTE4
OUTC6
NJTRS
JTMS
JTDO

ÐÂµÄ½Ó¿Ú

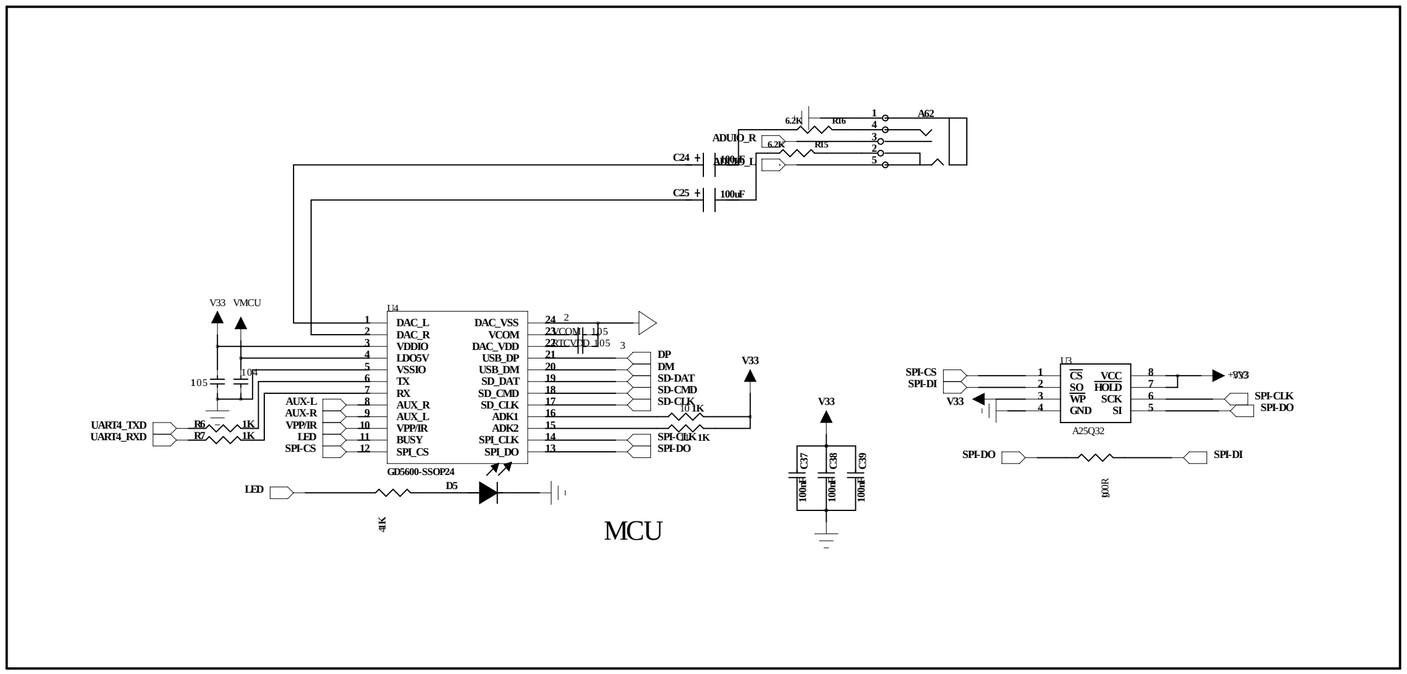
MCU
U4
GD5600-SSOP24
DAC_L
DAC_R
VDDIO
LDO5V
VSSIO
TX
RX
AUX_R
AUX_L
VPP/IR
BUSY
SPI_CS
DAC_VSS
VCOM
DAC_VDD
USB_DP
USB_DM
SD_DAT
SD_CMD
SD_CLK
ADK1
ADK2
SPI_CLK
SPI_DO
AUX-L
AUX-R
VPP/IR
LED
SPI-CS
UART4_TXD
UART4_RXD
R6 1K
R7 1K
V33
VMCU
105
104
DP
DM
SD-DAT
SD-CMD
SD-CLK
SPI-CLK
SPI-DO
101K
LED
D5
4K
ADUIO_R
ADUIO_L
C24
C25
100uF
R16 6.2K
R15 6.2K
A62
C37 100nF
C38 100nF
C39 100nF
SPI-CS
SPI-DI
U3
CS
SO
WP
GND
VCC
HOLD
SCK
SI
A25Q32
+3V3
SPI-DO
100R

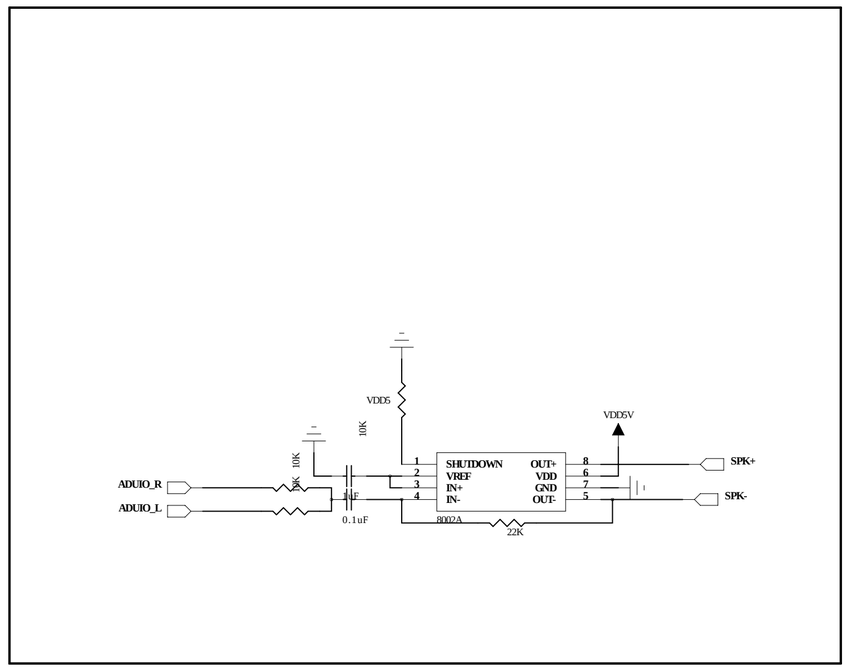
VDD5
10K
VDD5V
ADUIO_R
ADUIO_L
10K
10K
1uF
0.1uF
SHUTDOWN
VREF
IN+
IN-
OUT+
VDD
GND
OUT-
8002A
22K
SPK+
SPK-

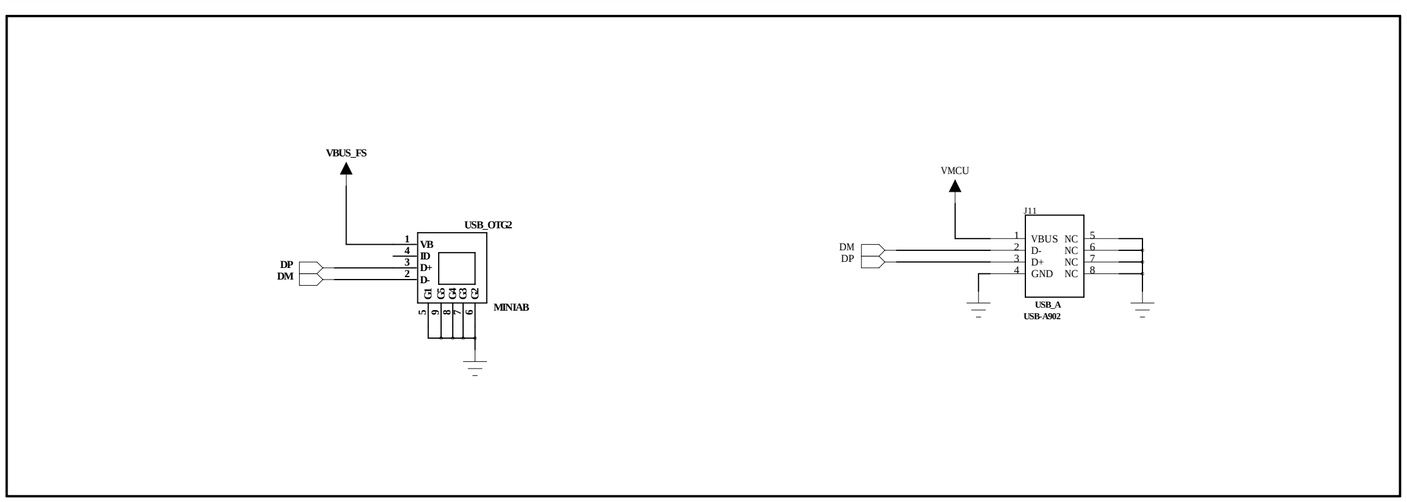
VBUS_FS
USB_OTG2
VB
ID
D+
D-
DP
DM
MINIAB
VMCU
U11
VBUS
D-
D+
GND
NC
USB_A
USB-A902

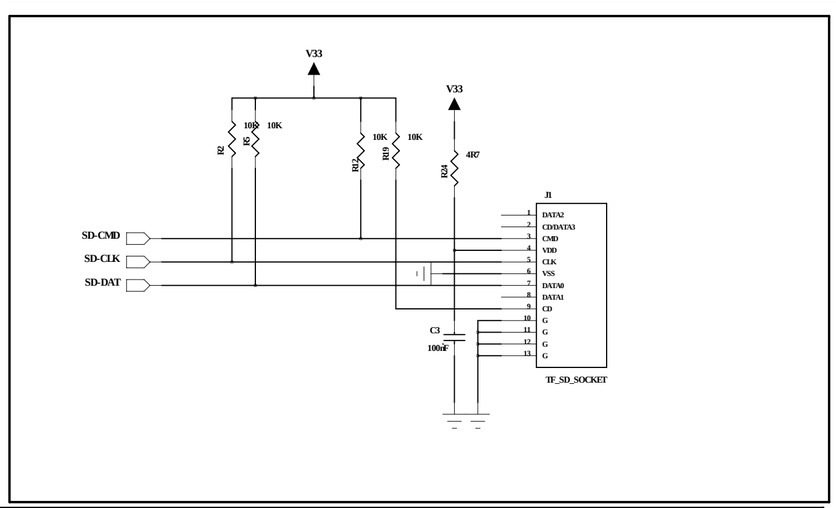
V33
R2 10K
R5 10K
R17 10K
R19 10K
R24 4R7
SD-CMD
SD-CLK
SD-DAT
J1
DATA2
CD/DATA3
CMD
VDD
CLK
VSS
DATA0
DATA1
CD
G
C3 100nF
TF_SD_SOCKET

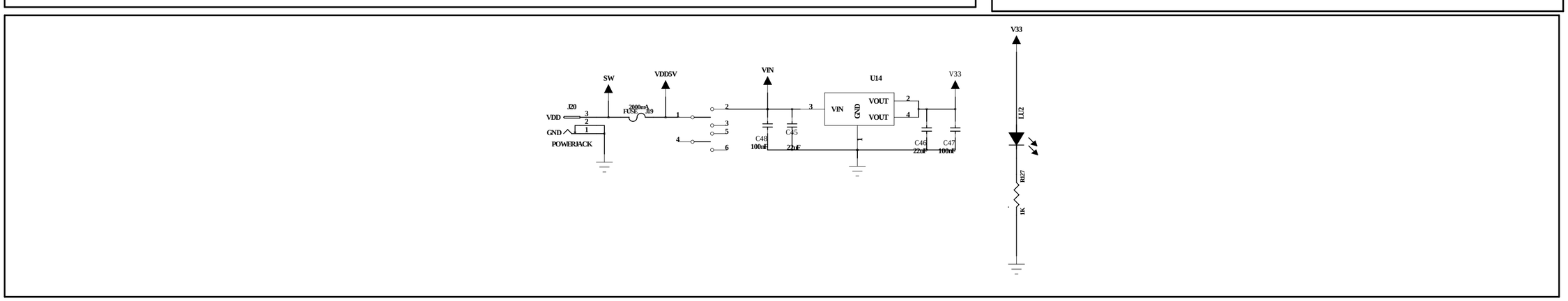
SW
VDD5V
VIN
U14
V33
J20
VDD
GND
POWERJACK
2000mA
FUSE
R9
VIN
GND
VOUT
VOUT
C48 100nF
C45 22uF
C46 22uF
C47 100nF
LL2
R27
1K

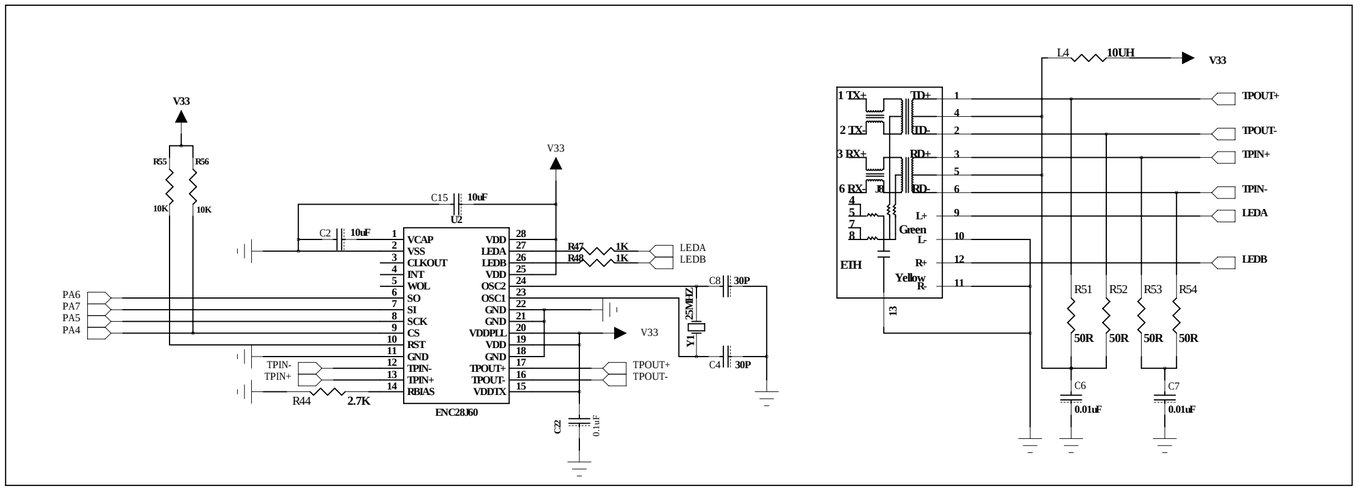
V33
R55
R56
10K
10K
C15
10uF
U2
C2
10uF
VCAP
VSS
CLKOUT
INT
WOL
SO
SI
SCK
CS
RST
GND
TPIN-
TPIN+
RBIAS
VDD
LEDA
LEDB
VDD
OSC2
OSC1
GND
GND
VDDPLL
VDD
GND
TPOUT+
TPOUT-
VDDTX
ENC28J60
R47
R48
1K
1K
LEDA
LEDB
C8
30P
25MHZ
Y1
C4
30P
PA6
PA7
PA5
PA4
TPIN-
TPIN+
R44
2.7K
TPOUT+
TPOUT-
C2
0.1uF
L4
10UH
1 TX+
2 TX-
3 RX+
6 RX-
J1
4
5
7
8
ETH
TD+
TD-
RD+
RD-
L+
L-
Green
R+
R-
Yellow
L3
TPOUT+
TPOUT-
TPIN+
TPIN-
LEDA
LEDB
R51
R52
R53
R54
50R
50R
50R
50R
C6
0.01uF
C7
0.01uF

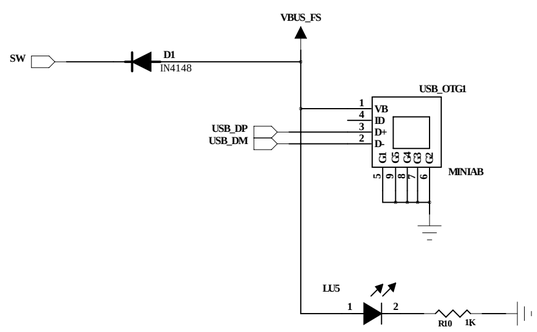
VBUS_FS
SW
D1
IN4148
USB_OTG1
1
4
3
2
VB
ID
D+
D-
USB_DP
USB_DM
MINIAB
LU5
1
2
R10
1K