ESP WiFi MODULE

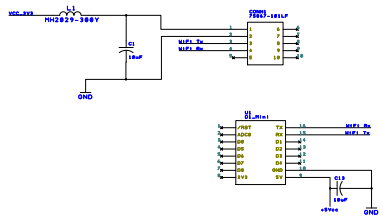

POWER SUPPLY

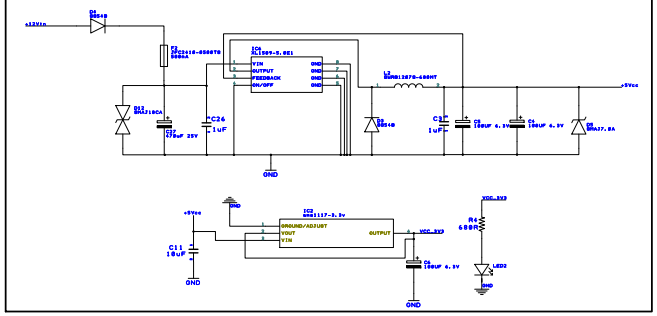

MODEL 3 SLAVE INTERFACE

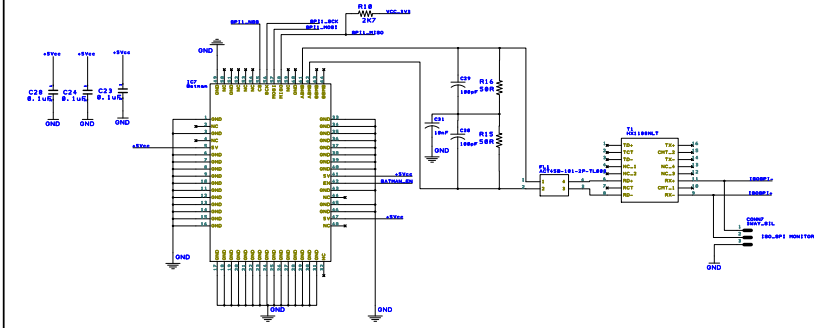

STM32F103C8T6 MCU

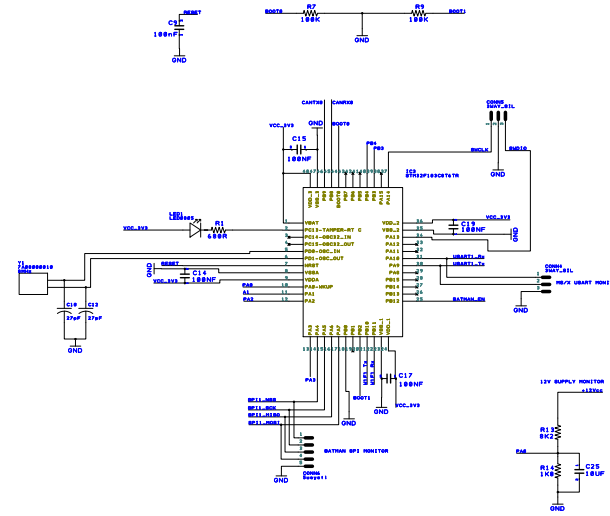

DIGITAL OUTPUT DRIVER

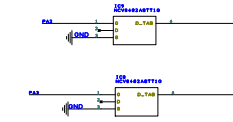

MOLEX 48 WAY CONNECTOR

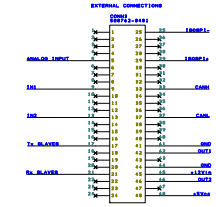

MODEL S SLAVE INTERFACE

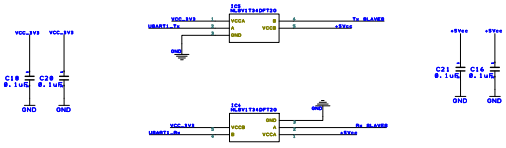

ANALOG INPUT

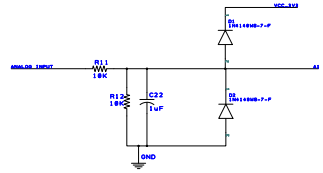

CAN BUS

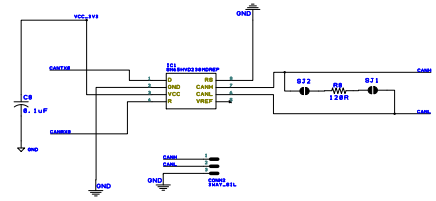
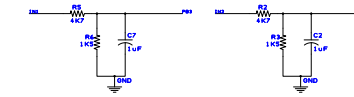
DIGITAL INPUTS 12V