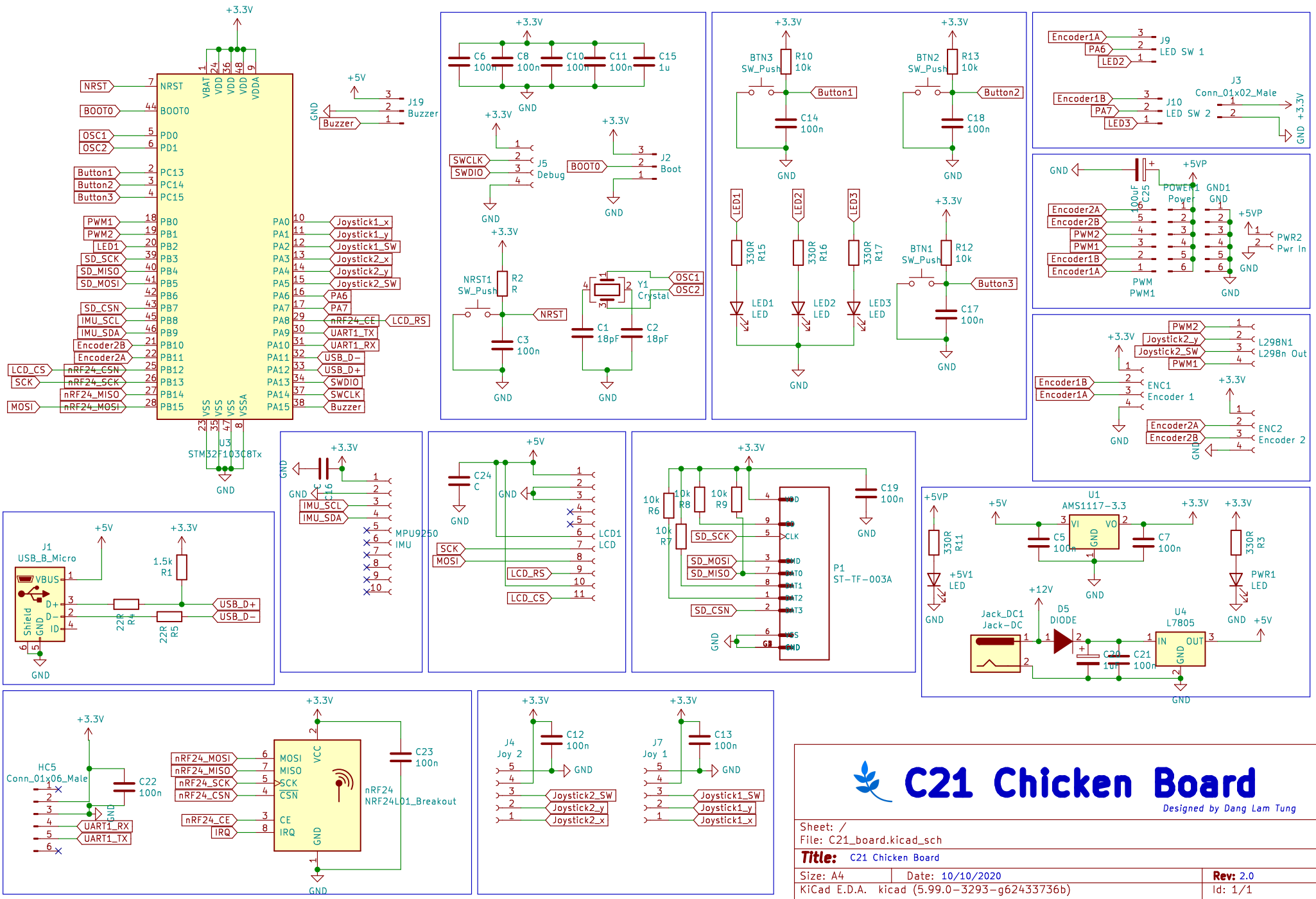
U3
STM32F103C8Tx
NRST
BOOT0
OSC1
OSC2
Button1
Button2
Button3
PWM1
PWM2
LED1
SD_SCK
SD_MISO
SD_MOSI
SD_CSN
IMU_SCL
IMU_SDA
Encoder2B
Encoder2A
LCD_CS
SCK
nRF24_MISO
MOSI
nRF24_CSN
nRF24_SCK
nRF24_MOSI
Joystick1_x
Joystick1_y
Joystick1_SW
Joystick2_x
Joystick2_y
Joystick2_SW
PA6
PA7
nRF24_CE
LCD_RS
UART1_TX
UART1_RX
USB_D−
USB_D+
SWDIO
SWCLK
Buzzer
J19
Buzzer
J5
Debug
J2
Boot
R2
R
NRST1
SW_Push
C3
100n
Y1
Crystal
C1
18pF
C2
18pF
C6
100n
C8
100n
C10
100n
C11
100n
C15
1u
BTN3
SW_Push
R10
10k
C14
100n
BTN2
SW_Push
R13
10k
C18
100n
BTN1
SW_Push
R12
10k
C17
100n
LED1
LED2
LED3
330R
R15
330R
R16
330R
R17
LED1
LED
LED2
LED
LED3
LED
J9
LED SW 1
J10
LED SW 2
J3
Conn_01x02_Male
C25
100uF
POWER1
Power
GND1
GND
PWR2
Pwr In
L298N1
L298n Out
ENC1
Encoder 1
ENC2
Encoder 2
J1
USB_B_Micro
VBUS
D+
D−
ID
Shield
GND
1.5k
R1
22R
R4
22R
R5
MPU9250
IMU
C24
C
LCD1
LCD
P1
ST−TF−003A
C19
100n
R6
10k
R8
10k
R9
10k
R7
10k
330R
R11
+5V1
LED
U1
AMS1117−3.3
C5
100n
C7
100n
330R
R3
PWR1
LED
Jack_DC1
Jack−DC
D5
DIODE
C20
10n
C21
100n
U4
L7805
HC5
Conn_01x06_Male
C22
100n
nRF24
NRF24L01_Breakout
C23
100n
J4
Joy 2
C12
100n
J7
Joy 1
C13
100n
C21 Chicken Board
Designed by Dang Lam Tung
Sheet: /
File: C21_board.kicad_sch
Title: C21 Chicken Board
Size: A4
Date: 10/10/2020
Rev: 2.0
KiCad E.D.A. kicad (5.99.0−3293−g62433736b)
Id: 1/1