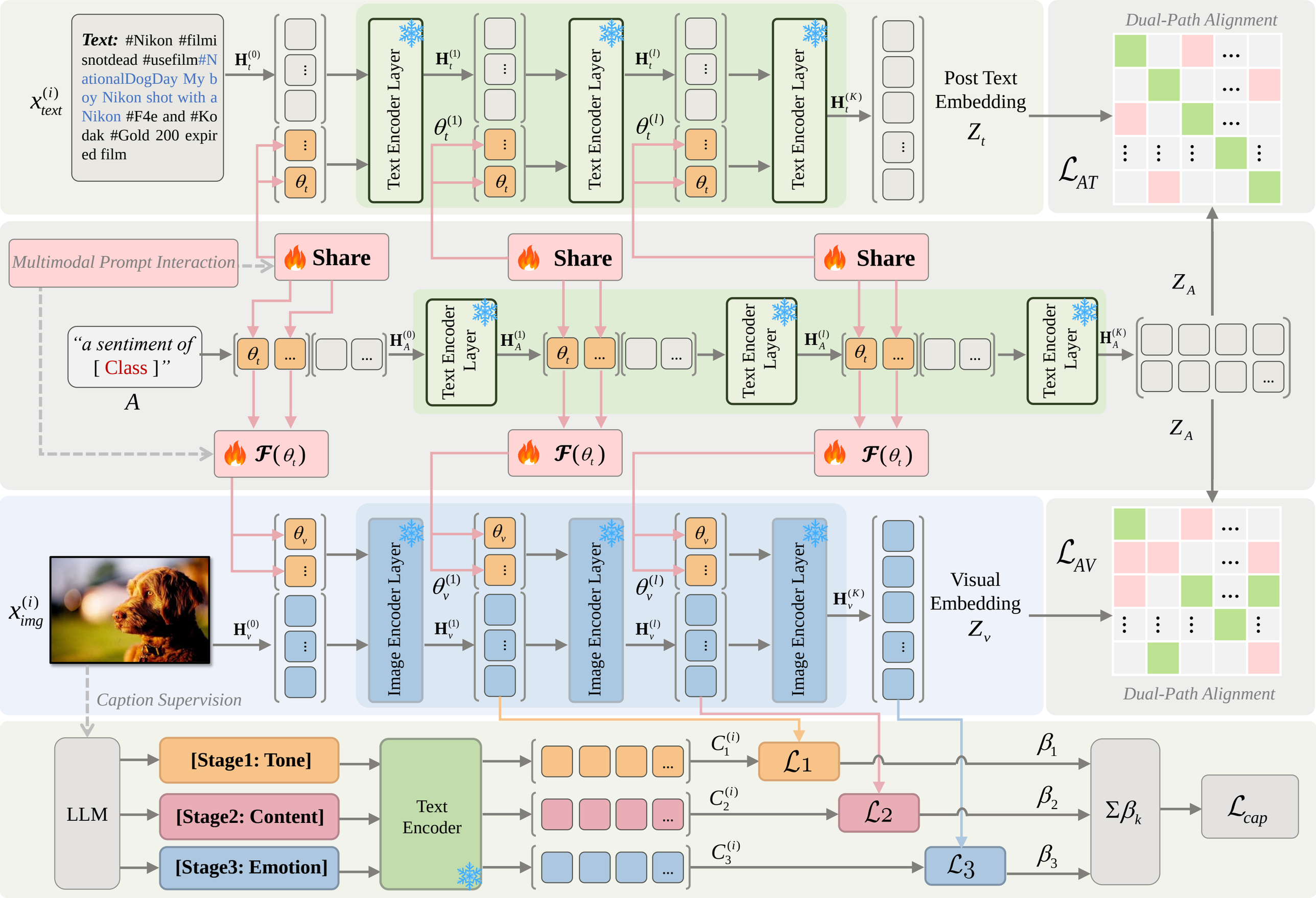
Text: #Nikon #filmisnotdead #usefilm#NationalDogDay My boy Nikon shot with a Nikon #F4e and #Kodak #Gold 200 expired film
Text Encoder Layer
Post Text Embedding
Dual-Path Alignment
Multimodal Prompt Interaction
Share
"a sentiment of [Class]"
Image Encoder Layer
Visual Embedding
Caption Supervision
LLM
[Stage1: Tone]
[Stage2: Content]
[Stage3: Emotion]
Text Encoder