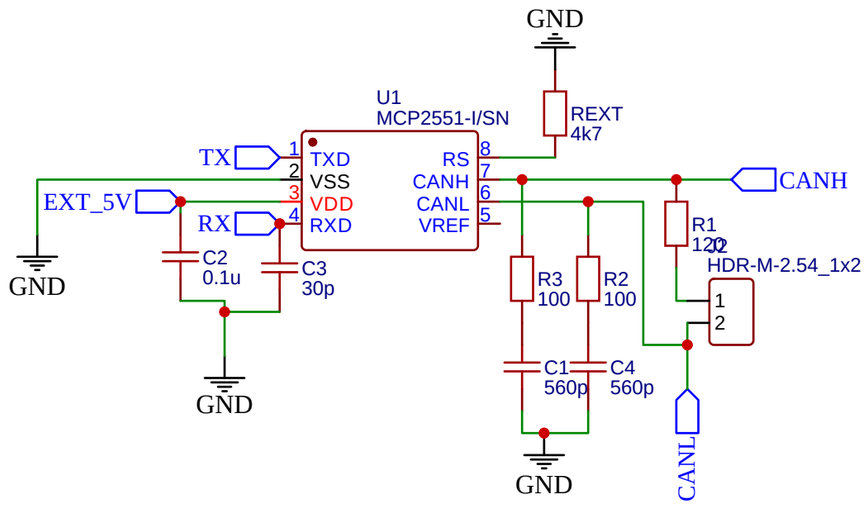

MCP2551

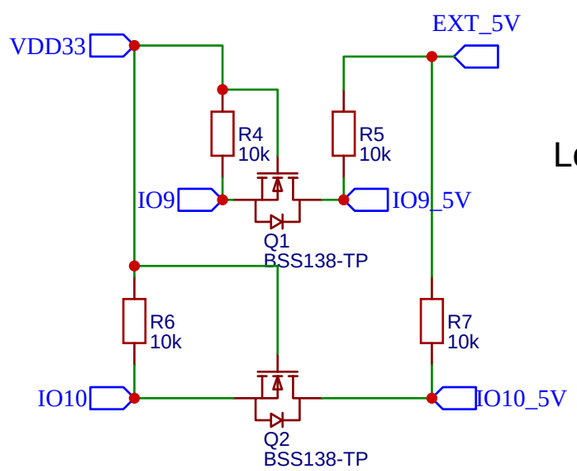

Logic Level Converter

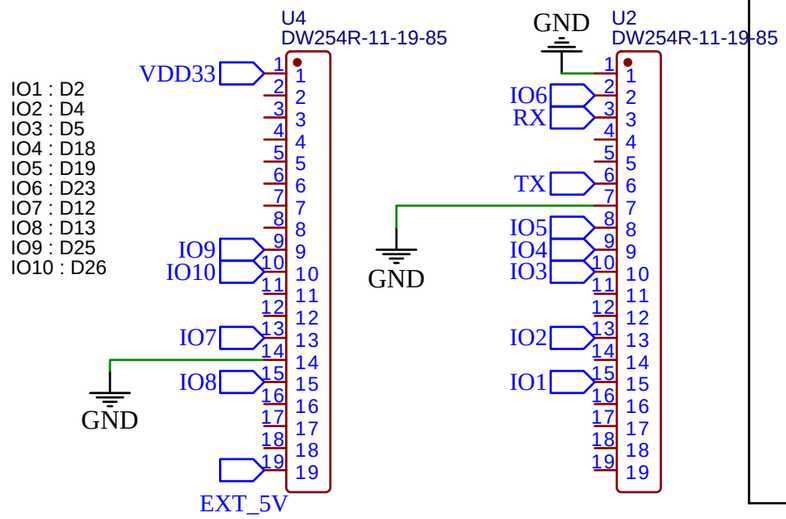

ESP32 DevkitC v4 Pin Connector

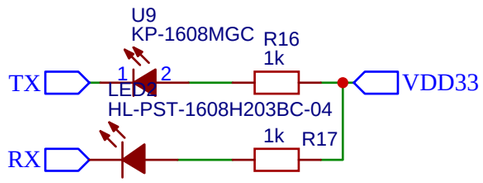

LED RX & TX

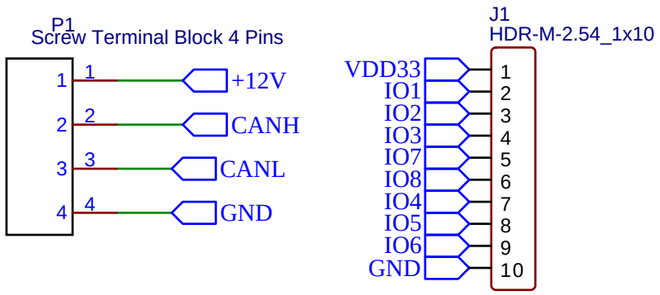

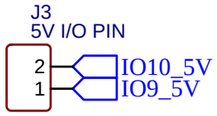

IO & CAN Connector

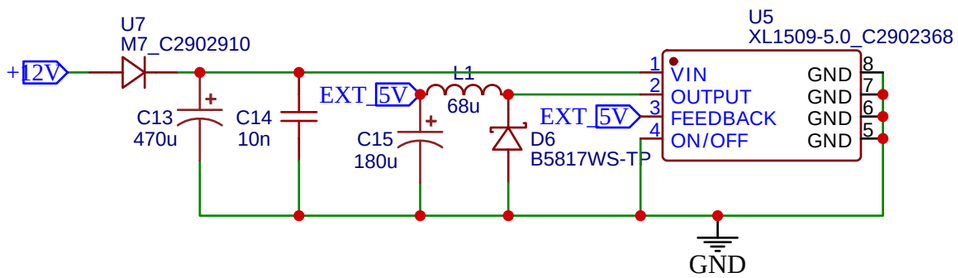

12V to 5V Buck Converter

TITLE: Sheet_1		REV: 1.0
EasyEDA	Company: Your Company	Sheet: 1/1
	Date: 2024-07-05 Drawn By: fathiyaas	