01_INFO

2025/07/04:
基于AT32xx的电机控制板

Title	RM510 ESC电调板	
Size A	Document Number <Doc>	Rev V1
Date: Tuesday, August 19, 2025	Sheet 1 of 10	

02_Diagram

Title	RM510 ESC电调板	
Size A	Document Number <Doc>	Rev V1
Date: Tuesday, August 19, 2025	Sheet 2 of 10	

03_PowerTree

Title	RM510 ESC电调板	
Size A	Document Number <Doc>	Rev V1
Date: Tuesday, August 19, 2025	Sheet 3 of 10	

04_Power

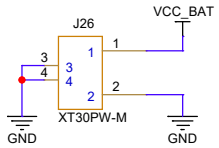

Sofe Start

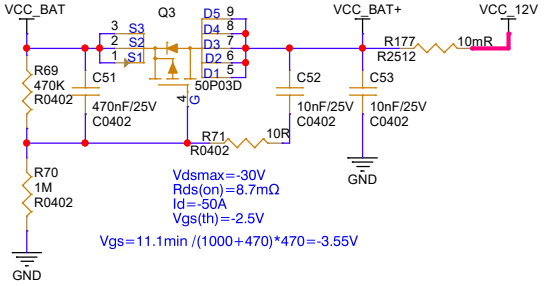

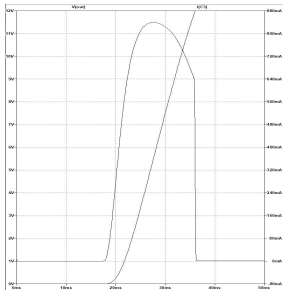

12V -> 8V

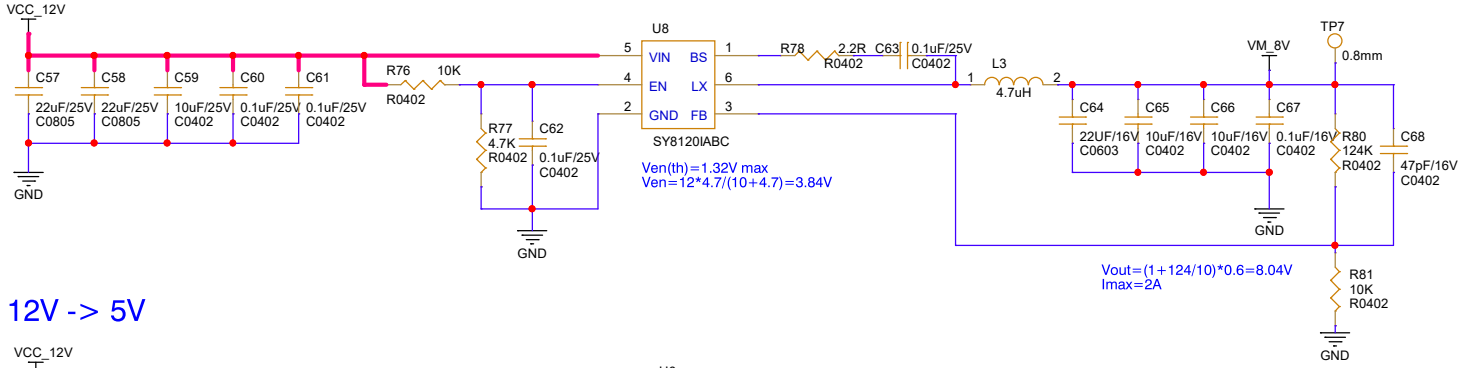

12V -> 5V

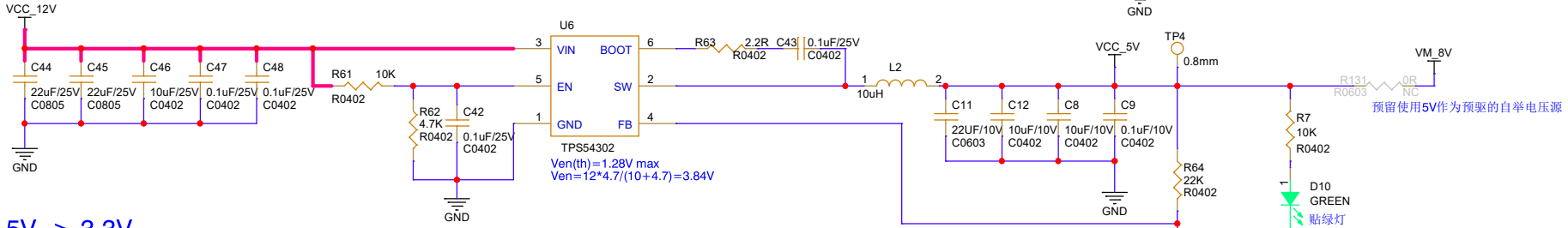

5V -> 3.3V

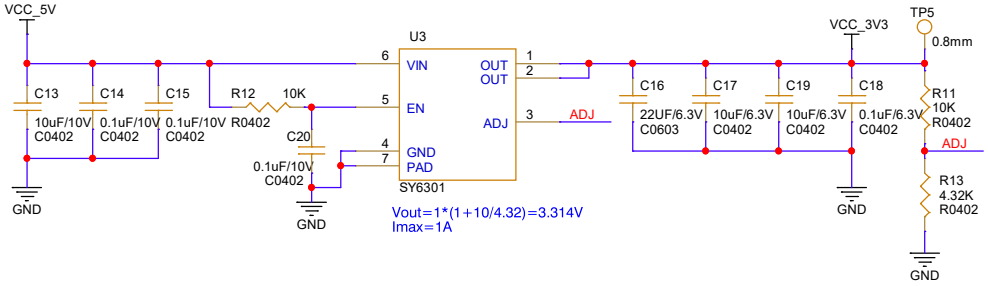

Title	RM510 ESC电调板		
Size B	Document Number <Doc>		Rev V1
Date: Tuesday, August 19, 2025		Sheet 4 of 10	

05_MCU_Master

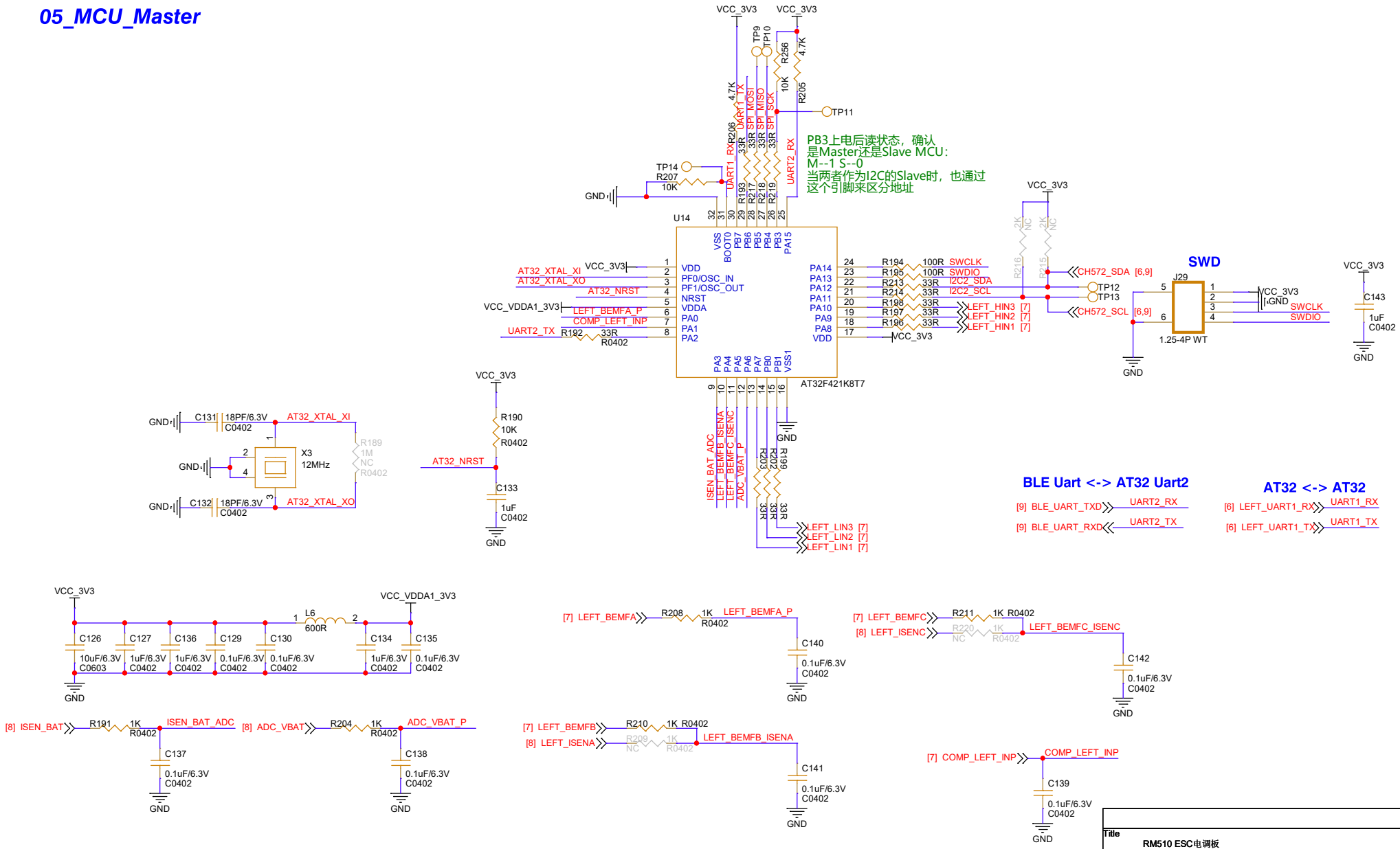

Title	RM510 ESC电调板		
Size B	Document Number <Doc>		Rev V1
Date: Tuesday, August 19, 2025		Sheet 5 of 10	

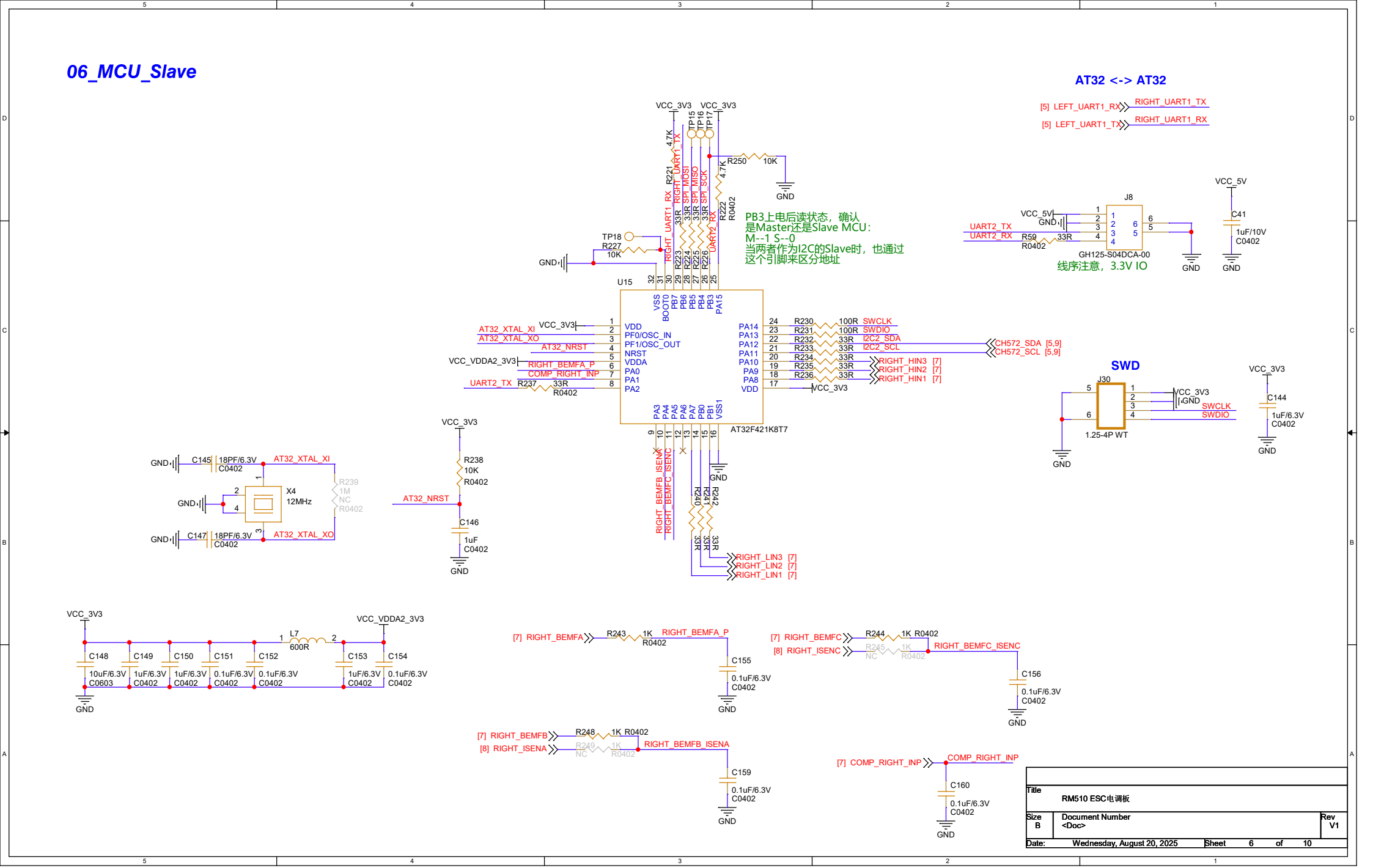
06_MCU_Slave
AT32 <-> AT32
[5] LEFT_UART1_RX
RIGHT_UART1_TX
[5] LEFT_UART1_TX
RIGHT_UART1_RX
VCC_3V3
TP15
TP16
TP17
R250
10K
GND
R221
4.7K
RIGHT_UART1_TX
RIGHT_UART1_RX
SPI_MOSI
SPI_MISO
SPI_SCK
UART2_RX
R222
R0402
PB3上电后读状态，确认
是Master还是Slave MCU：
M--1 S--0
当两者作为I2C的Slave时，也通过
这个引脚来区分地址
TP18
R227
10K
U15
VSS
BOOT0
PB7
PB6
PB5
PB4
PB3
PA15
VDD
PF0/OSC_IN
PF1/OSC_OUT
NRST
VDDA
PA0
PA1
PA2
PA14
PA13
PA12
PA11
PA10
PA9
PA8
VDD
PA3
PA4
PA5
PA6
PA7
PB0
PB1
VSS1
AT32F421K8T7
AT32_XTAL_XI
AT32_XTAL_XO
AT32_NRST
VCC_VDDA2_3V3
RIGHT_BEMFA_P
COMP_RIGHT_INP
UART2_TX
R237
33R
R0402
R230
100R
SWCLK
R231
100R
SWDIO
R232
33R
I2C2_SDA
R233
33R
I2C2_SCL
R234
33R
R235
33R
R236
33R
CH572_SDA [5,9]
CH572_SCL [5,9]
RIGHT_HIN3 [7]
RIGHT_HIN2 [7]
RIGHT_HIN1 [7]
RIGHT_BEMFB_ISENA
RIGHT_BEMFC_ISENC
R240
R241
R242
RIGHT_LIN3 [7]
RIGHT_LIN2 [7]
RIGHT_LIN1 [7]
J8
GH125-S04DCA-00
线序注意，3.3V IO
VCC_5V
C41
1uF/10V
C0402
SWD
J30
1.25-4P WT
C144
1uF/6.3V
C0402
C145
18PF/6.3V
C0402
X4
12MHz
R239
1M
NC
R0402
C147
18PF/6.3V
C0402
R238
10K
R0402
C146
1uF
C0402
L7
600R
C148
10uF/6.3V
C0603
C149
1uF/6.3V
C0402
C150
1uF/6.3V
C0402
C151
0.1uF/6.3V
C0402
C152
0.1uF/6.3V
C0402
C153
1uF/6.3V
C0402
C154
0.1uF/6.3V
C0402
[7] RIGHT_BEMFA
R243
1K
R0402
RIGHT_BEMFA_P
C155
0.1uF/6.3V
C0402
[7] RIGHT_BEMFC
[8] RIGHT_ISENC
R244
1K R0402
R245
NC
RIGHT_BEMFC_ISENC
C156
0.1uF/6.3V
C0402
[7] RIGHT_BEMFB
[8] RIGHT_ISENA
R248
1K R0402
R249
NC
RIGHT_BEMFB_ISENA
C159
0.1uF/6.3V
C0402
[7] COMP_RIGHT_INP
COMP_RIGHT_INP
C160
0.1uF/6.3V
C0402
Title
RM510 ESC电调板
Size
B
Document Number
<Doc>
Rev
V1
Date: Wednesday, August 20, 2025
Sheet 6 of 10

07_BLDC

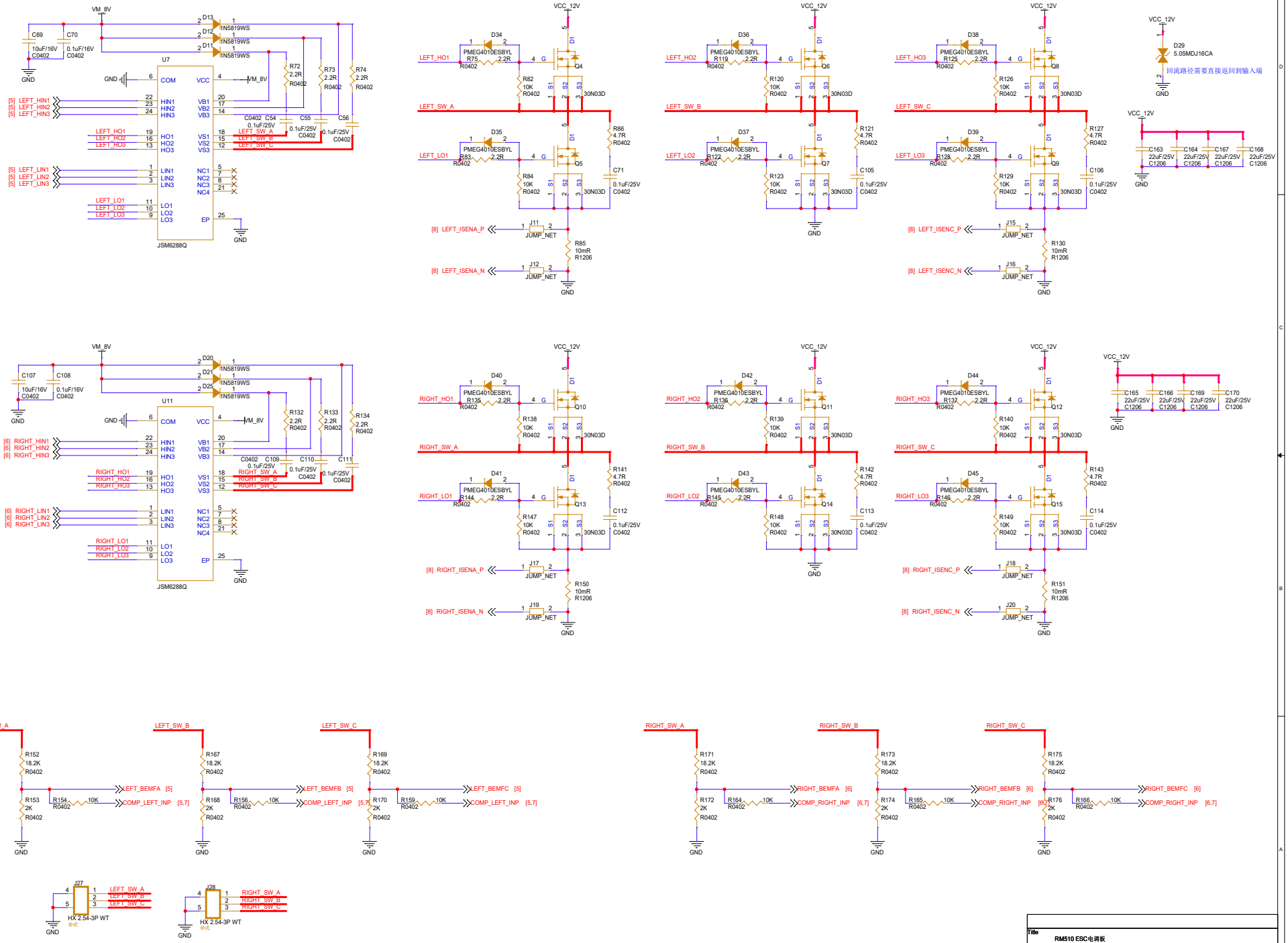

Title	RM510 ESC电调板		
Size C	Document Number <Doc>		Rev V1
Date: Tuesday, August 19, 2025	Sheet 7	of 10	

08_Sampling ADC

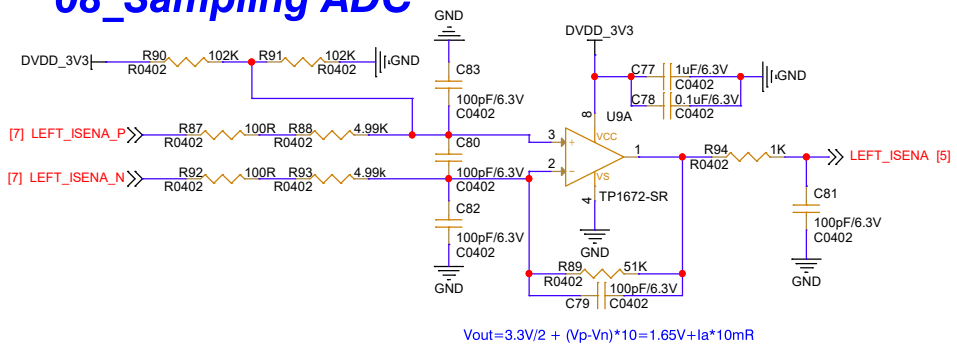

Vout=3.3V/2 + (Vp-Vn)*10=1.65V+Ia*10mR

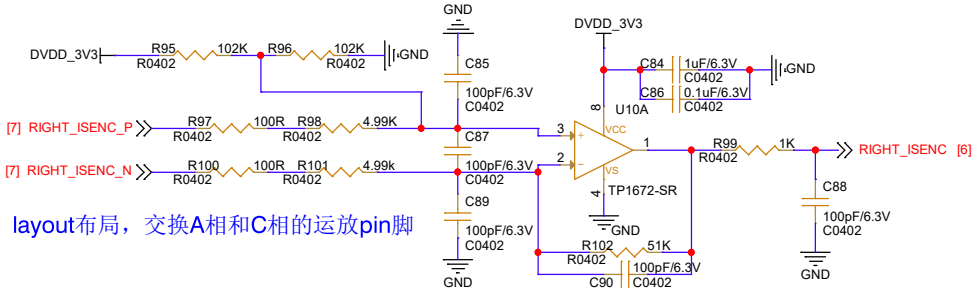

layout布局，交换A相和C相的运放pin脚

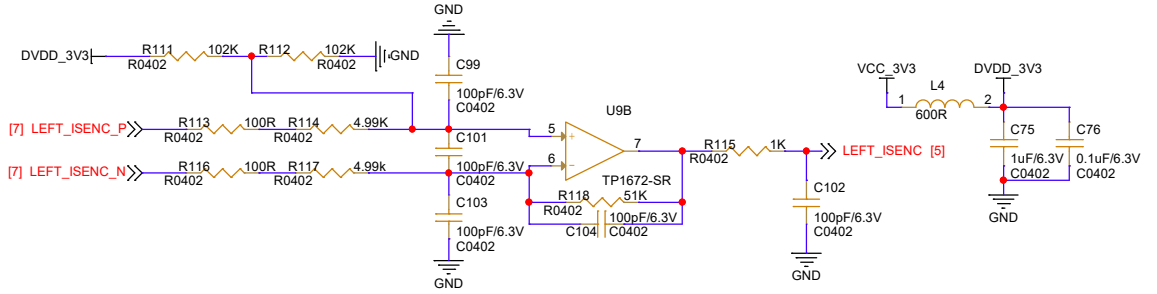

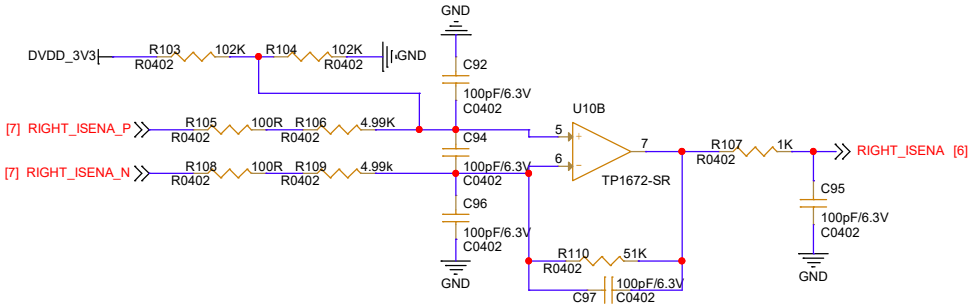

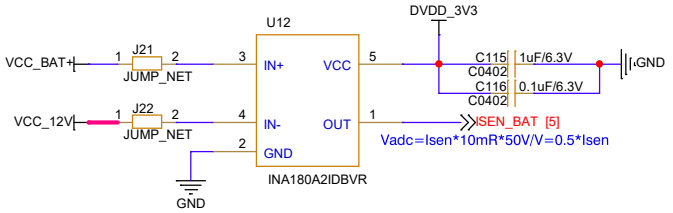

Vadc=Isen*10mR*50V/V=0.5*Isen

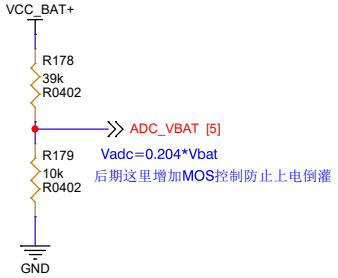

Vadc=0.204*Vbat

后期这里增加MOS控制防止上电倒灌

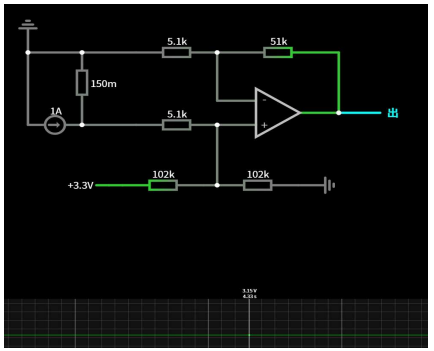

Title	RM510 ESC电调板	
Size B	Document Number <Doc>	Rev V1
Date: Tuesday, August 19, 2025	Sheet 8 of 10	

09_BlueTooth

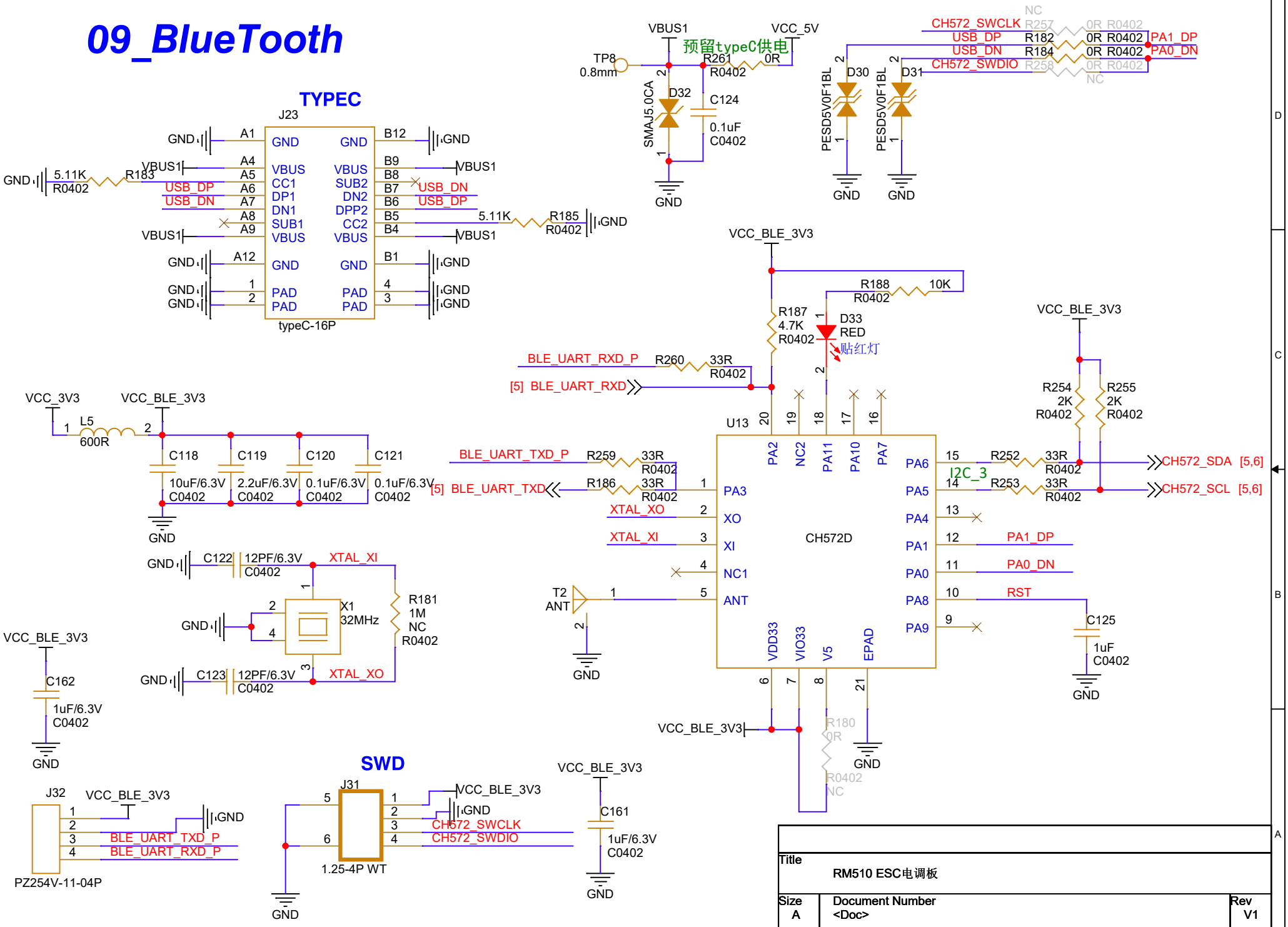

Title	RM510 ESC电调板		
Size A	Document Number <Doc>		Rev V1
Date:	Wednesday, August 20, 2025	Sheet 9 of 10	

10_QR_HOLE&EMI

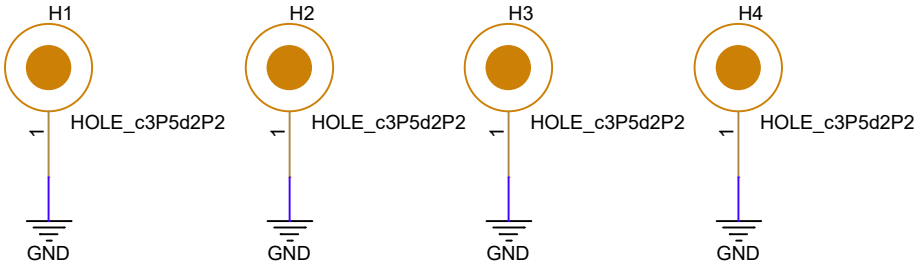

Title	RM510 ESC电调板	
Size A	Document Number <Doc>	Rev V1
Date: Tuesday, August 19, 2025	Sheet 10 of 10	