CODEC

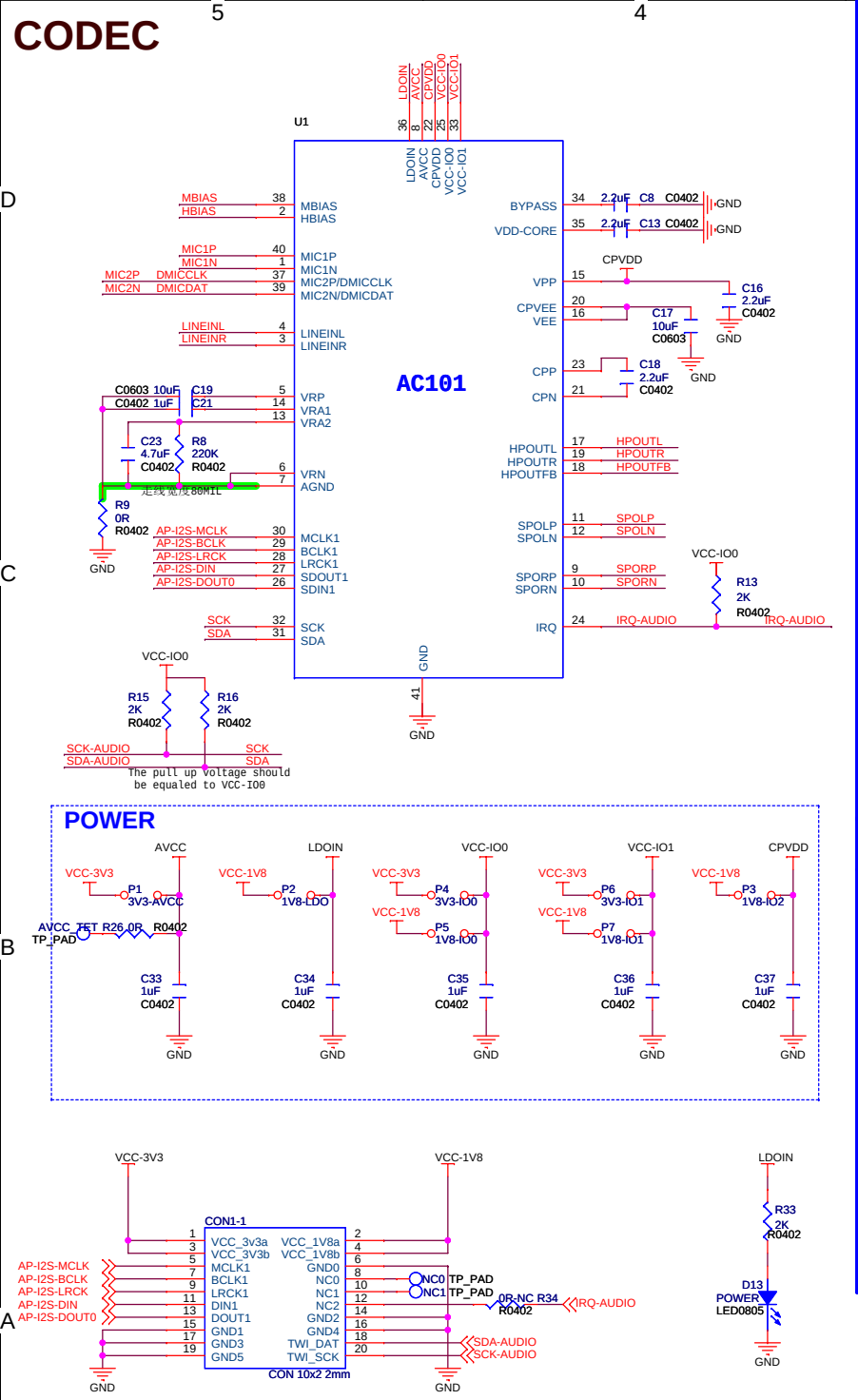

POWER

HP_JACK

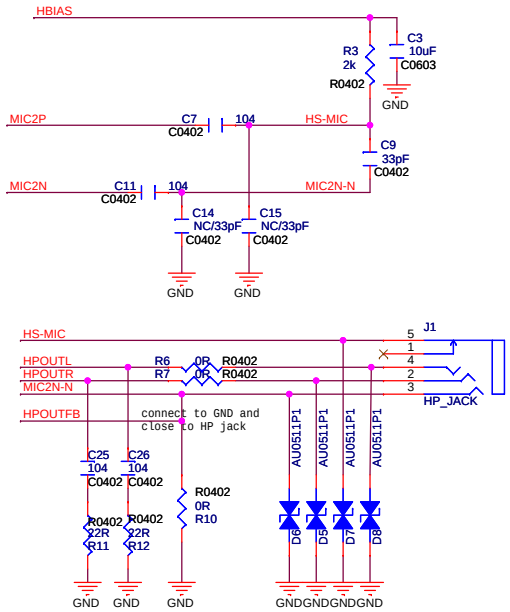

Differential Pair

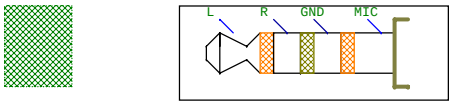

ECM AMIC

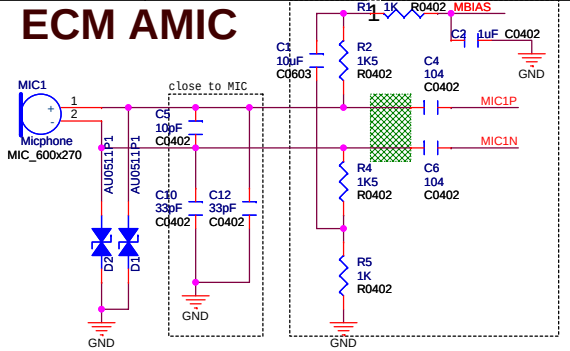

MEMS AMIC

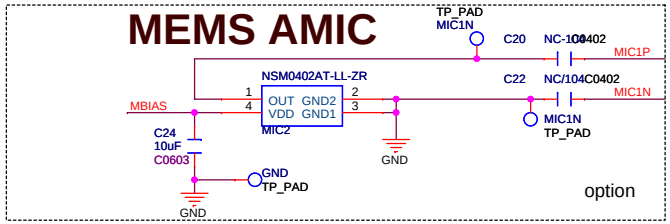

MEMS DMIC

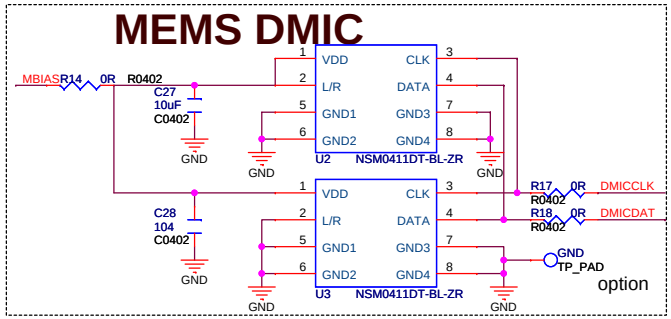

LINE-IN

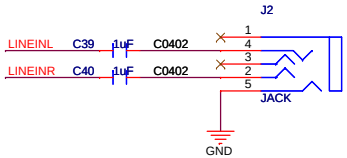

SPEAKER

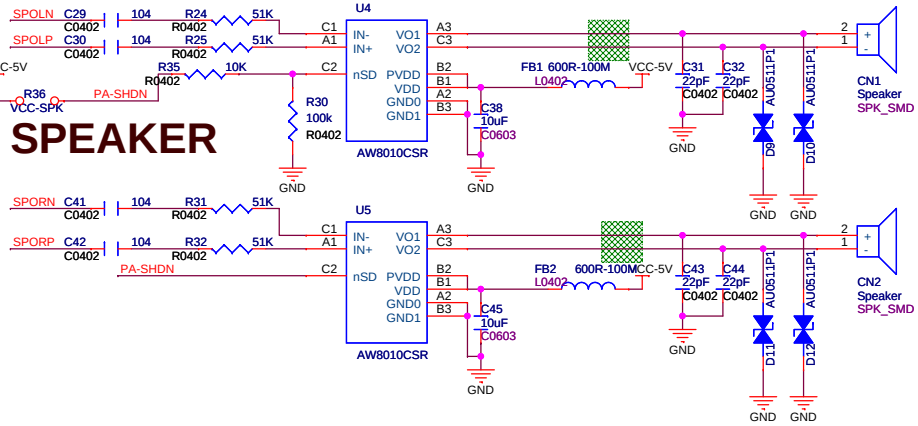

X-Powers Co.,Ltd		
Design Name	AC101_DEMO_V1.0	
Size A3	Page Name CODEC	Rev 1.0
Date: Monday, December 15, 2014	Sheet 1 of 1	