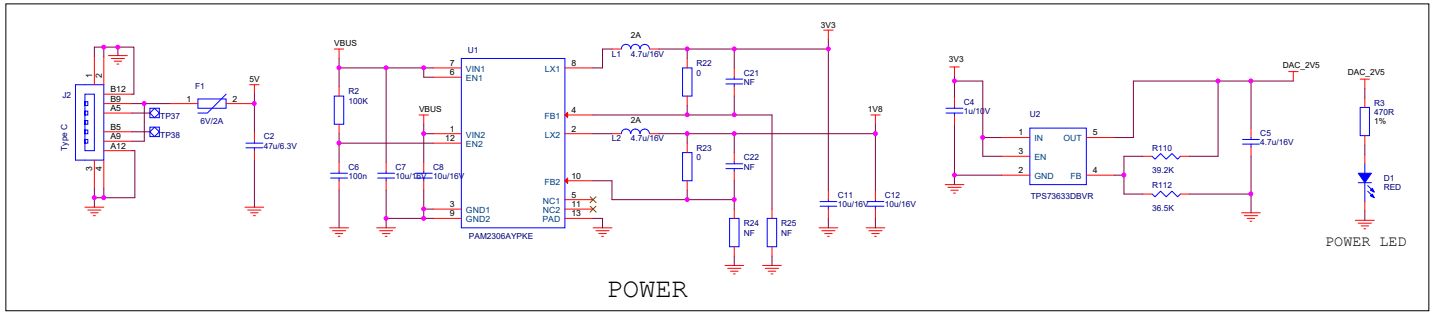
POWER
Type C
J2
B12
B9
A5
B5
A9
A12
TP37
TP38
F1
6V/2A
5V
C2
47u/6.3V
VBUS
R2
100K
C8
100n
C7
10u/16V
C8
10u/16V
U1
VIN1
EN1
VIN2
EN2
GND1
GND2
LX1
FB1
LX2
FB2
NC1
NC2
PAD
PAM2306AYPKE
L1
4.7u/16V
L2
4.7u/16V
R22
0
R23
0
C21
NF
C22
NF
R24
NF
R25
NF
3V3
1V8
C11
10u/16V
C12
10u/16V
C4
1u/10V
U2
IN
OUT
EN
GND
FB
TPS73633DBVR
DAC_2V5
R110
39.2K
R112
36.5K
C5
4.7u/16V
R3
470R
1%
D1
RED
POWER LED

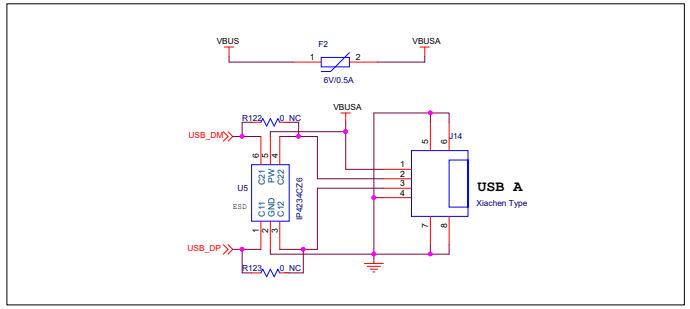
VBUS
F2
6V/0.5A
VBUSA
R122
0_NC
USB_DM
U5
ESD
IP4234CZ6
USB_DP
R123
0_NC
J14
USB A
Xiachen Type

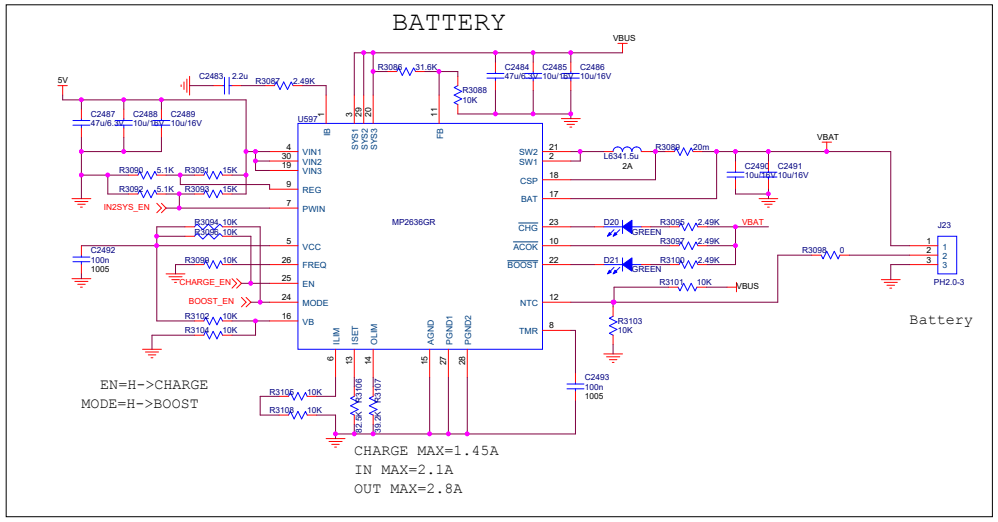
BATTERY
5V
C2483
2.2u
R3087
2.49K
VBUS
R3086
31.6K
R3088
10K
C2484
47u/6.3V
C2485
10u/16V
C2486
10u/16V
C2487
47u/6.3V
C2488
10u/16V
C2489
10u/16V
U597
MP2636GR
VIN1
VIN2
VIN3
REG
PWIN
VCC
FREQ
EN
MODE
VB
SW2
SW1
CSP
BAT
CHG
ACOK
BOOST
NTC
TMR
IN2SYS_EN
CHARGE_EN
BOOST_EN
R3090
5.1K
R3091
15K
R3092
5.1K
R3093
15K
R3094
10K
R3095
10K
C2492
100n
1005
R3096
10K
R3102
10K
R3104
10K
R3105
10K
R3108
10K
R3106
82.5K
R3107
39.2K
L6341.5u
2A
R3089
20m
C2490
10u/16V
C2491
10u/16V
VBAT
D20
GREEN
D21
GREEN
R3095
2.49K
R3097
2.49K
R3100
2.49K
R3101
10K
R3098
0
J23
PH2.0-3
R3103
10K
C2493
100n
1005
EN=H->CHARGE
MODE=H->BOOST
CHARGE MAX=1.45A
IN MAX=2.1A
OUT MAX=2.8A
Battery

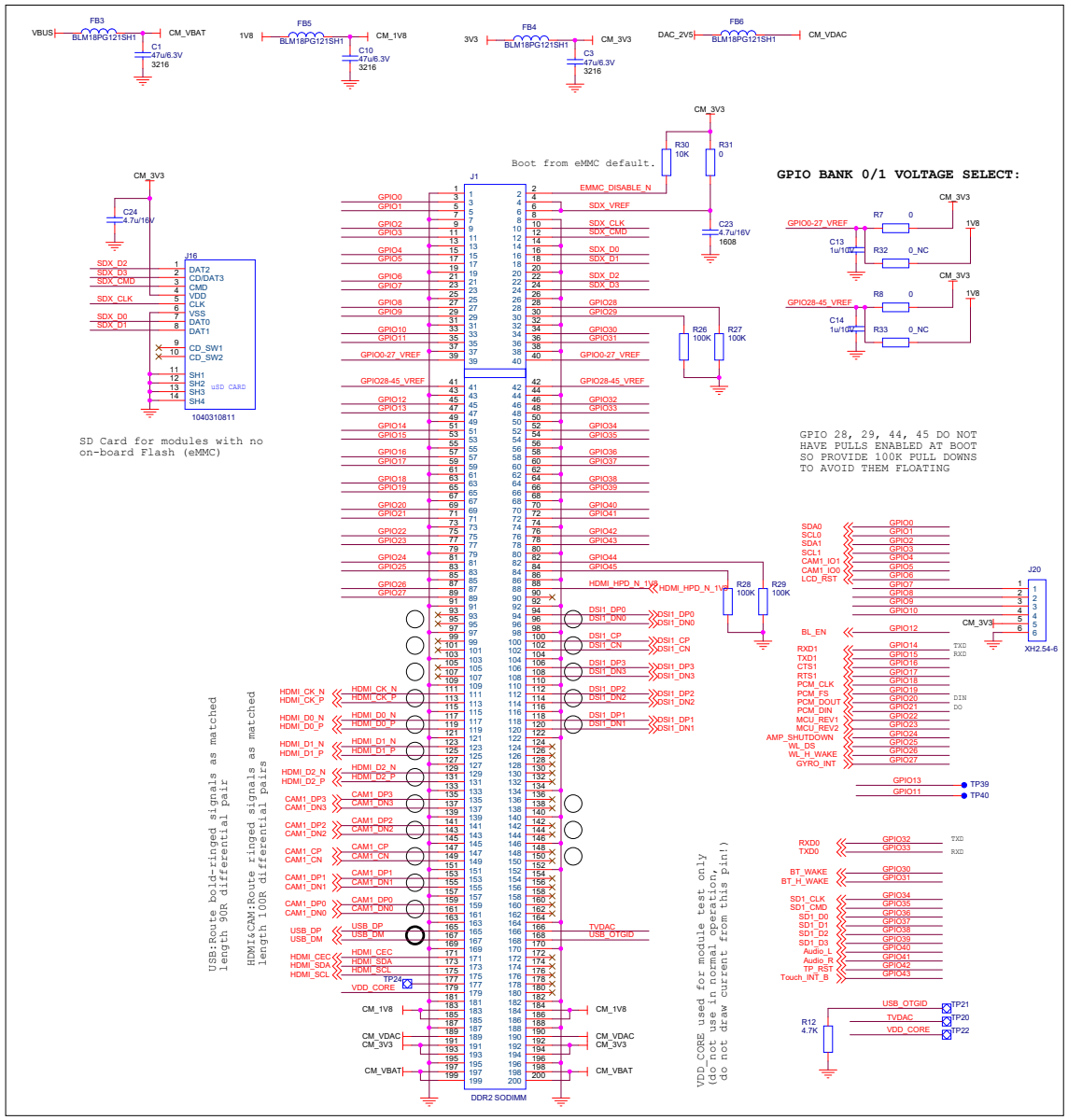
FB3
BLM18PG121SH1
CM_VBAT
C1
47u/6.3V
3216
FB5
CM_1V8
C10
47u/6.3V
3216
FB4
CM_3V3
C3
47u/6.3V
3216
FB6
CM_VDAC
CM_3V3
R30
10K
R31
0
C23
4.7u/16V
1608
Boot from eMMC default.
EMMC_DISABLE_N
SDX_VREF
SDX_CLK
SDX_CMD
SDX_D0
SDX_D1
SDX_D2
SDX_D3
GPIO28
GPIO29
GPIO30
GPIO31
GPIO0-27_VREF
GPIO28-45_VREF
R26
100K
R27
100K
J1
DDR2 SODIMM
C24
4.7u/16V
J16
DAT2
CD/DAT3
CMD
VDD
CLK
VSS
DAT0
DAT1
CD_SW1
CD_SW2
SH1
SH2
SH3
SH4
uSD CARD
1040310811
SD Card for modules with no
on-board Flash (eMMC)
GPIO BANK 0/1 VOLTAGE SELECT:
R7
0
R32
0_NC
C13
1u/10V
R8
0
R33
0_NC
C14
1u/10V
GPIO28 29, 44, 45 DO NOT
HAVE PULLS ENABLED AT BOOT
SO PROVIDE 100K PULL DOWNS
TO AVOID THEM FLOATING
HDMI_HPD_N_1V8
R28
100K
R29
100K
DSI1_DP0
DSI1_DN0
DSI1_CP
DSI1_CN
DSI1_DP3
DSI1_DN3
DSI1_DP2
DSI1_DN2
DSI1_DP1
DSI1_DN1
HDMI_CK_N
HDMI_CK_P
HDMI_D0_N
HDMI_D0_P
HDMI_D1_N
HDMI_D1_P
HDMI_D2_N
HDMI_D2_P
CAM1_DP3
CAM1_DN3
CAM1_DP2
CAM1_DN2
CAM1_CP
CAM1_CN
CAM1_DP1
CAM1_DN1
CAM1_DP0
CAM1_DN0
USB_DP
USB_DM
HDMI_CEC
HDMI_SDA
HDMI_SCL
TP24
VDD_CORE
TVDAC
USB_OTGID
CM_1V8
CM_VDAC
CM_3V3
CM_VBAT
USB:Route bold-ringed signals as matched
length 90R differential pair
HDMI&CAM:Route ringed signals as matched
length 100R differential pairs
VDD_CORE used for module test only
(do not use in normal operation,
do not draw current from this pin!)
SDA0
SCL0
SDA1
SCL1
CAM1_IO1
CAM1_IO0
LCD_RST
BL_EN
RXD1
TXD1
CTS1
RTS1
PCM_CLK
PCM_FS
PCM_DOUT
PCM_DIN
MCU_REV1
MCU_REV2
AMP_SHUTDOWN
WL_DS
WL_H_WAKE
GYRO_INT
J20
XH2.54-6
TP39
TP40
RXD0
TXD0
BT_WAKE
BT_H_WAKE
SD1_CLK
SD1_CMD
SD1_D0
SD1_D1
SD1_D2
SD1_D3
Audio_L
Audio_R
TP_RST
Touch_INT_B
R12
4.7K
TP21
TP20
TP22

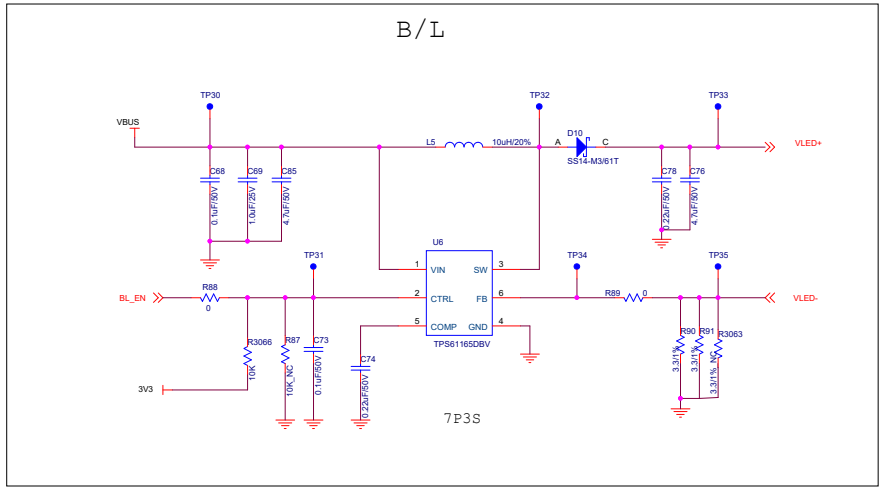
B/L
TP30
TP32
TP33
VBUS
L5
10uH/20%
D10
SS14-M3/61T
VLED+
C68
C69
C85
C78
C76
U6
VIN
SW
CTRL
FB
COMP
GND
TPS61165DBV
TP31
TP34
TP35
BL_EN
R88
R89
VLED-
R3066
R87
C73
C74
R90
R91
R3063
3V3
7P3S

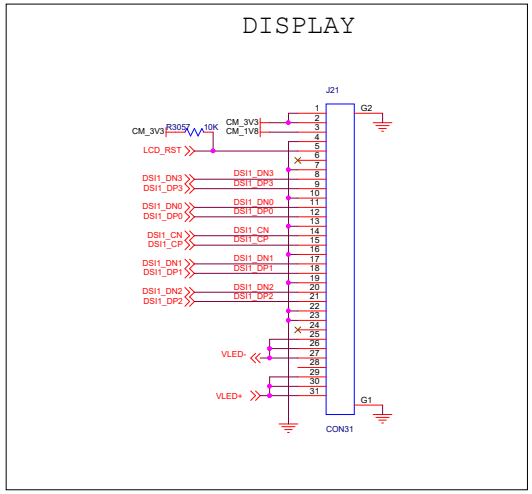
DISPLAY
J21
CM_3V3
R3057
10K
LCD_RST
DSI1_DN3
DSI1_DP3
DSI1_DN0
DSI1_DP0
DSI1_CN
DSI1_CP
DSI1_DN1
DSI1_DP1
DSI1_DN2
DSI1_DP2
VLED-
VLED+
G2
G1
CON31

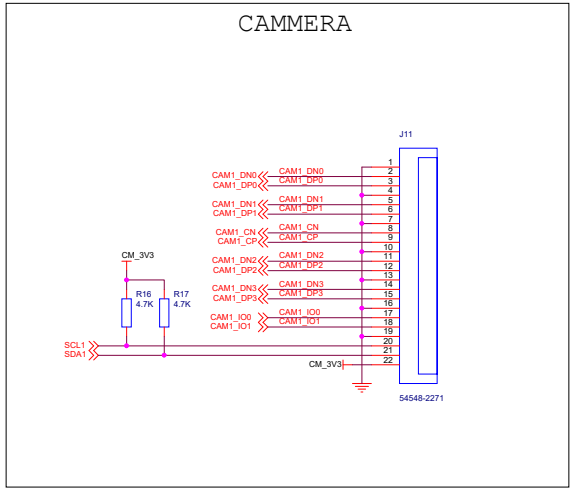
CAMMERA
J11
CAM1_DN0
CAM1_DP0
CAM1_DN1
CAM1_DP1
CAM1_CN
CAM1_CP
CAM1_DN2
CAM1_DP2
CAM1_DN3
CAM1_DP3
CAM1_IO0
CAM1_IO1
CM_3V3
R16
4.7K
R17
4.7K
SCL1
SDA1
54548-2271

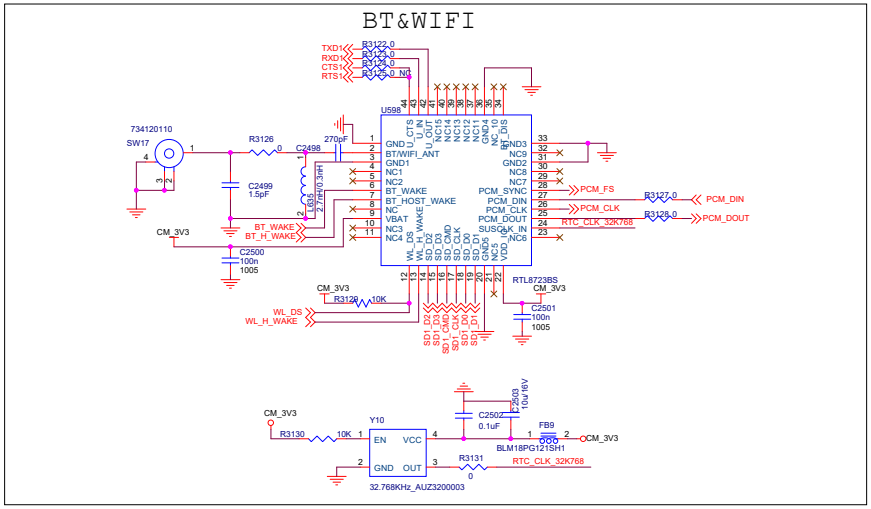
BT&WIFI
TXD1
RXD1
CTS1
RTS1
R3122 0
R3123 0
R3124 0
R3125 0 NC
U598
734120110
SW17
R3126
C2498
270pF
C2499
1.5pF
L601
2.7nH/0.3nH
C2500
100n
1005
CM_3V3
BT_WAKE
BT_H_WAKE
PCM_FS
PCM_CLK
RTC_CLK_32K768
PCM_DIN
PCM_DOUT
R3127 0
R3128 0
RTL8723BS
R3129
10K
WL_DS
WL_H_WAKE
C2501
100n
1005
Y10
EN
VCC
GND
OUT
32.768KHz_AUZ3200003
R3130
10K
C2502
0.1uF
C2503
10uF/6V
FB9
BLM18PG121SH1
R3131
0

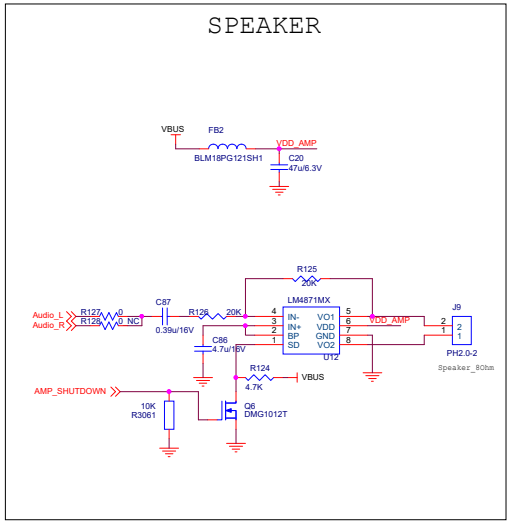
SPEAKER
VBUS
FB2
BLM18PG121SH1
VDD_AMP
C20
47u/6.3V
R125
20K
LM4871MX
Audio_L
Audio_R
R127
R128
0 NC
C87
0.39u/16V
R126
20K
C86
4.7u/16V
U12
J9
PH2.0-2
Speaker_8Ohm
R124
4.7K
VBUS
AMP_SHUTDOWN
10K
R3061
Q6
DMG1012T

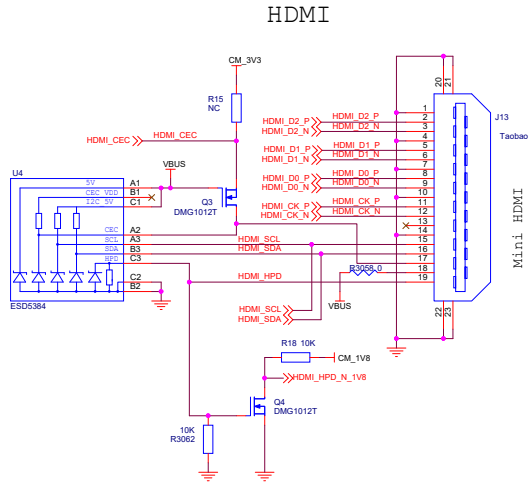
HDMI
CM_3V3
R15
NC
HDMI_CEC
VBUS
U4
Q3
DMG1012T
ESD5384
HDMI_D2_P
HDMI_D2_N
HDMI_D1_P
HDMI_D1_N
HDMI_D0_P
HDMI_D0_N
HDMI_CK_P
HDMI_CK_N
HDMI_SCL
HDMI_SDA
HDMI_HPD
R3068 0
J13
Taobao
Mini HDMI
R18 10K
CM_1V8
HDMI_HPD_N_1V8
Q4
DMG1012T
10K
R3062

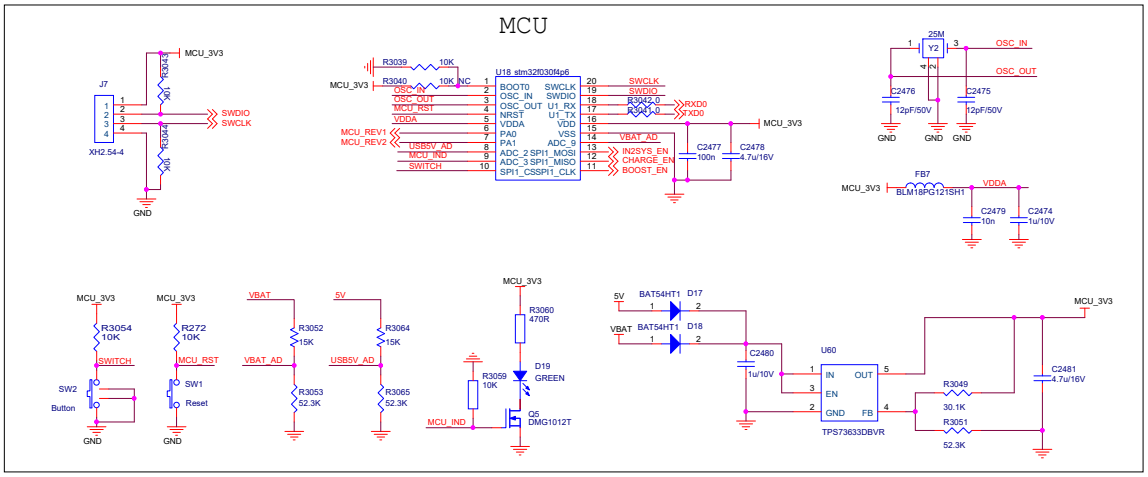
MCU
J7
MCU_3V3
SWDIO
SWCLK
XH2.54-4
GND
U18 stm32f030f4p6
BOOT0
OSC_IN
OSC_OUT
MCU_RST
VDDA
PA0
PA1
ADC_2
ADC_3
SPI1_CSSPI1_CLK
SWCLK
SWDIO
U1_RX
U1_TX
VDD
VSS
ADC_9
SPI1_MOSI
SPI1_MISO
IN2SYS_EN
CHARGE_EN
BOOST_EN
RXD0
TXD0
VBAT_AD
MCU_REV1
MCU_REV2
USB5V_AD
MCU_IND
SWITCH
R3039
10K
R3040
10K NC
C2477
100n
C2478
4.7u/16V
25M
Y2
OSC_IN
OSC_OUT
C2476
12pF/50V
C2475
12pF/50V
FB7
BLM18PG121SH1
VDDA
C2479
10n
C2474
1u/10V
R3054
10K
R272
10K
SW2
Button
SW1
Reset
VBAT
5V
R3052
15K
R3064
15K
R3053
52.3K
R3065
52.3K
R3060
470R
D19
GREEN
R3059
10K
Q5
DMG1012T
BAT54HT1
D17
D18
C2480
1u/10V
U60
IN
OUT
EN
GND
FB
TPS73633DBVR
R3049
30.1K
R3051
52.3K
C2481
4.7u/16V

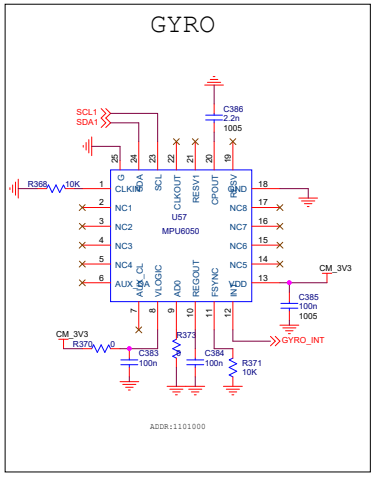
GYRO
SCL1
SDA1
R369
10K
U57
MPU6050
CLKIN
NC1
NC2
NC3
NC4
AUX_DA
SDA
SCL
CLKOUT
RESV1
CPOUT
RESV
GND
NC8
NC7
NC6
NC5
VDD
INT
AUX_CL
VLOGIC
AD0
REGOUT
FSYNC
C386
2.2n
1005
C385
100n
1005
CM_3V3
R370
0
C383
100n
R373
C384
100n
R371
10K
GYRO_INT
ADDR:1101000

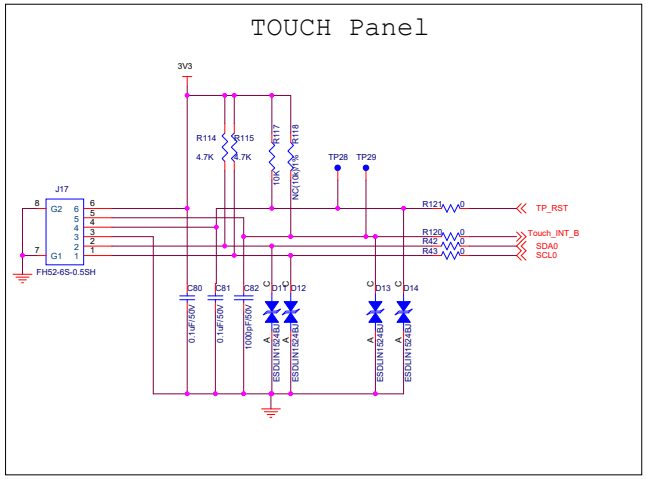
TOUCH Panel
3V3
J17
FH52-6S-0.5SH
R114
4.7K
R115
4.7K
R117
10K
R118
NC(10k)%
TP28
TP29
R121
0
TP_RST
R120
0
R42
0
R43
0
Touch_INT_B
SDA0
SCL0
C80
C81
C82
D11
D12
D13
D14
ESDLIN1524BJ