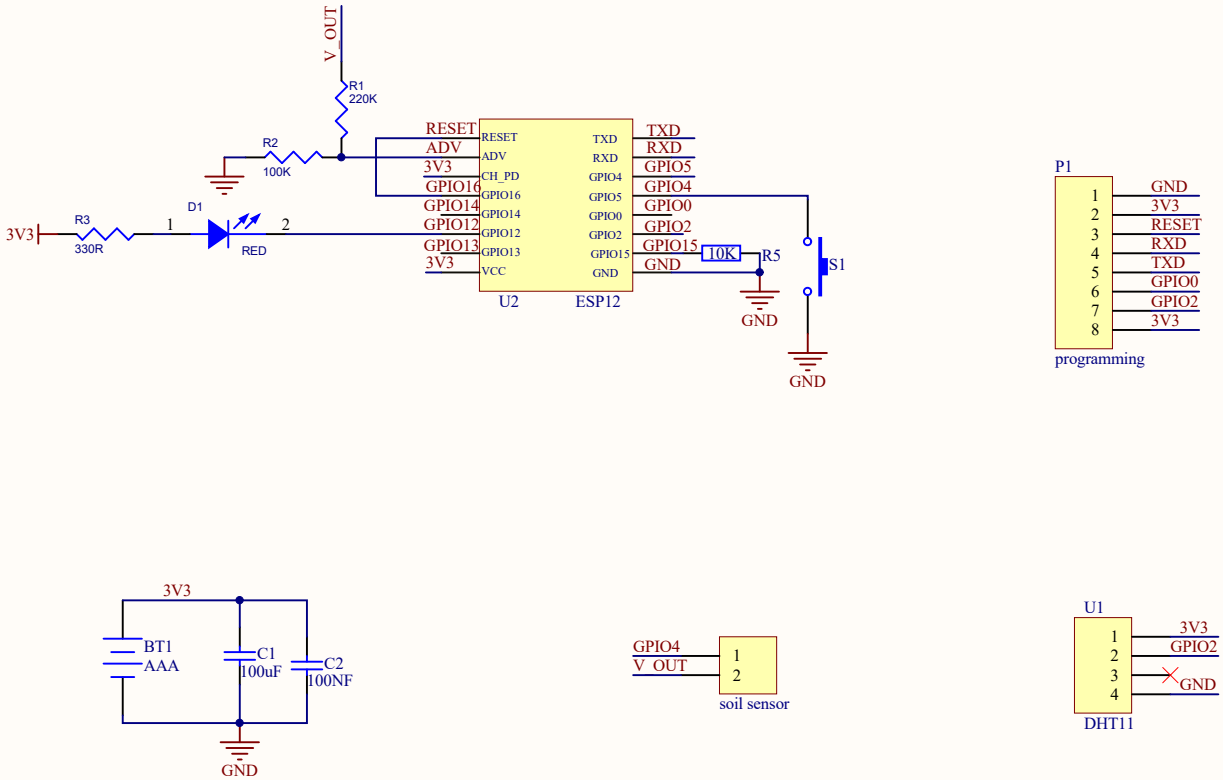

Title		
Size A4	Number	Revision
Date: 2016/4/13		Sheet of
File: E:\Work\..\soilesp8266.SchDoc		Drawn By: