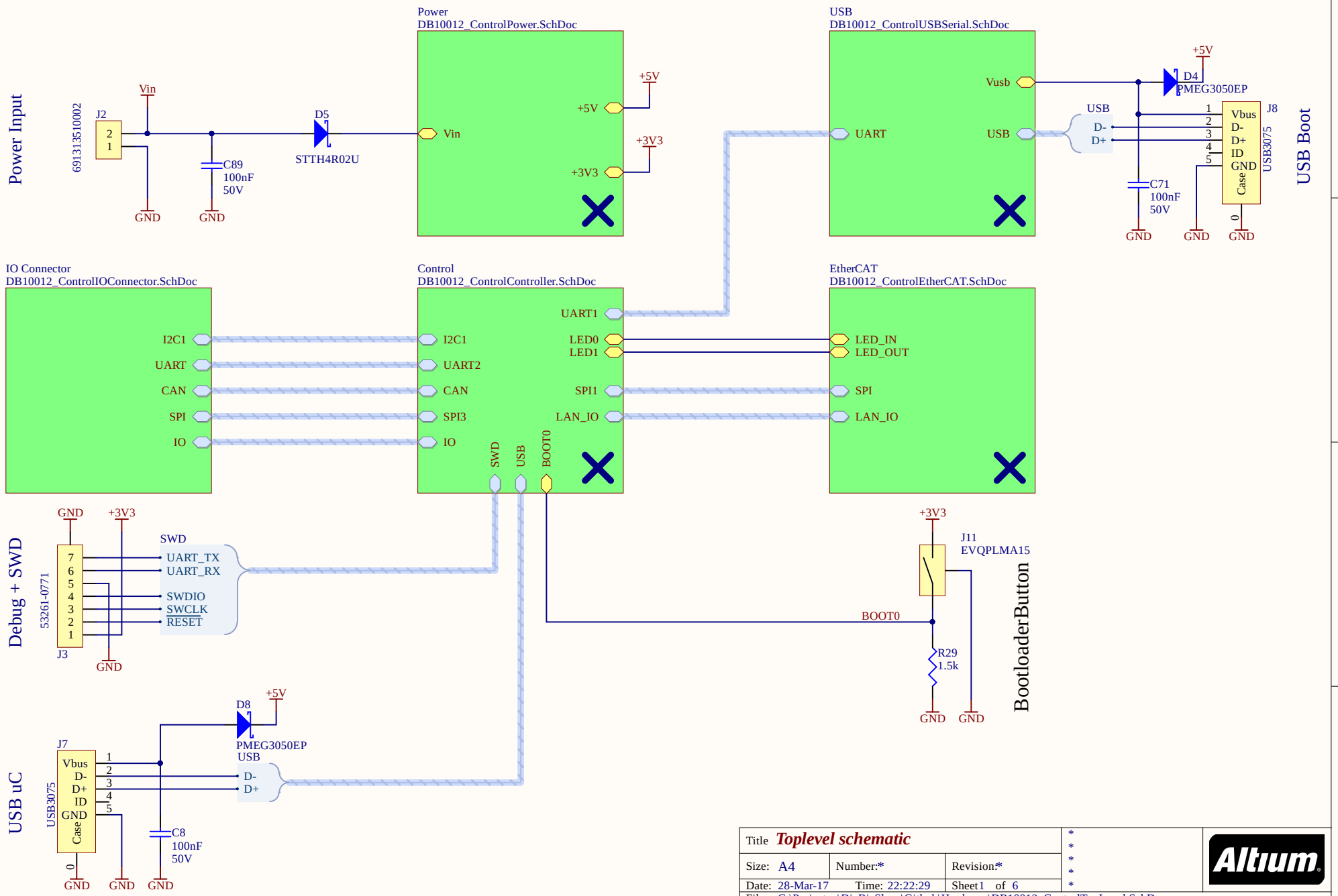
Power Input
691313510002
J2
Vin
GND
C89
100nF
50V
D5
STTH4R02U
Power
DB10012_ControlPower.SchDoc
Vin
+5V
+3V3
USB
DB10012_ControlUSBSerial.SchDoc
Vusb
UART
USB
D4
PMEG3050EP
USB
D-
D+
C71
100nF
50V
J8
Vbus
D-
D+
ID
GND
Case
USB3075
USB Boot
IO Connector
DB10012_ControlIOConnector.SchDoc
I2C1
UART
CAN
SPI
IO
Control
DB10012_ControlController.SchDoc
UART1
LED0
LED1
SPI1
LAN_IO
I2C1
UART2
CAN
SPI3
IO
SWD
USB
BOOT0
EtherCAT
DB10012_ControlEtherCAT.SchDoc
LED_IN
LED_OUT
SPI
LAN_IO
Debug + SWD
53261-0771
J3
SWD
UART_TX
UART_RX
SWDIO
SWCLK
RESET
J11
EVQPLMA15
BOOT0
R29
1.5k
BootloaderButton
USB uC
J7
USB3075
D8
PMEG3050EP
USB
D-
D+
C8
100nF
50V
Title Toplevel schematic
Size: A4
Number:*
Revision:*
Date: 28-Mar-17
Time: 22:22:29
Sheet1 of 6
File: C:\Projecten\DieBieSlave\Github\Hardware\DB10012_ControlTopLevel.SchDoc
Altium

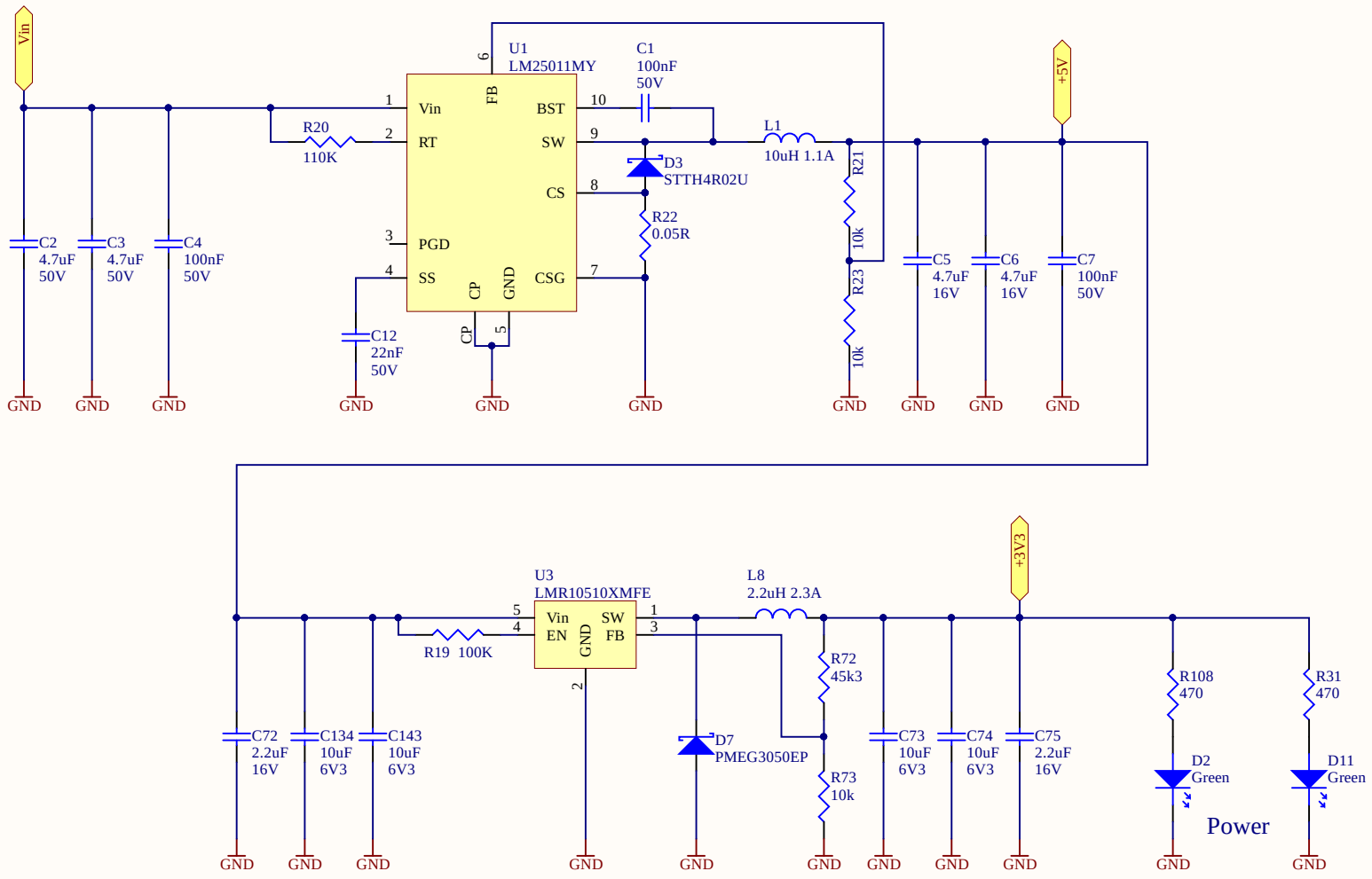

Title	***Power supply***		
Size: A4	Number:*	Revision:*	
Date: 28-Mar-17	Time: 22:22:29	Sheet2 of 6	
File: C:\Projecten\DieBieSlave\Github\Hardware\DB10012_ControlPower.SchDoc			

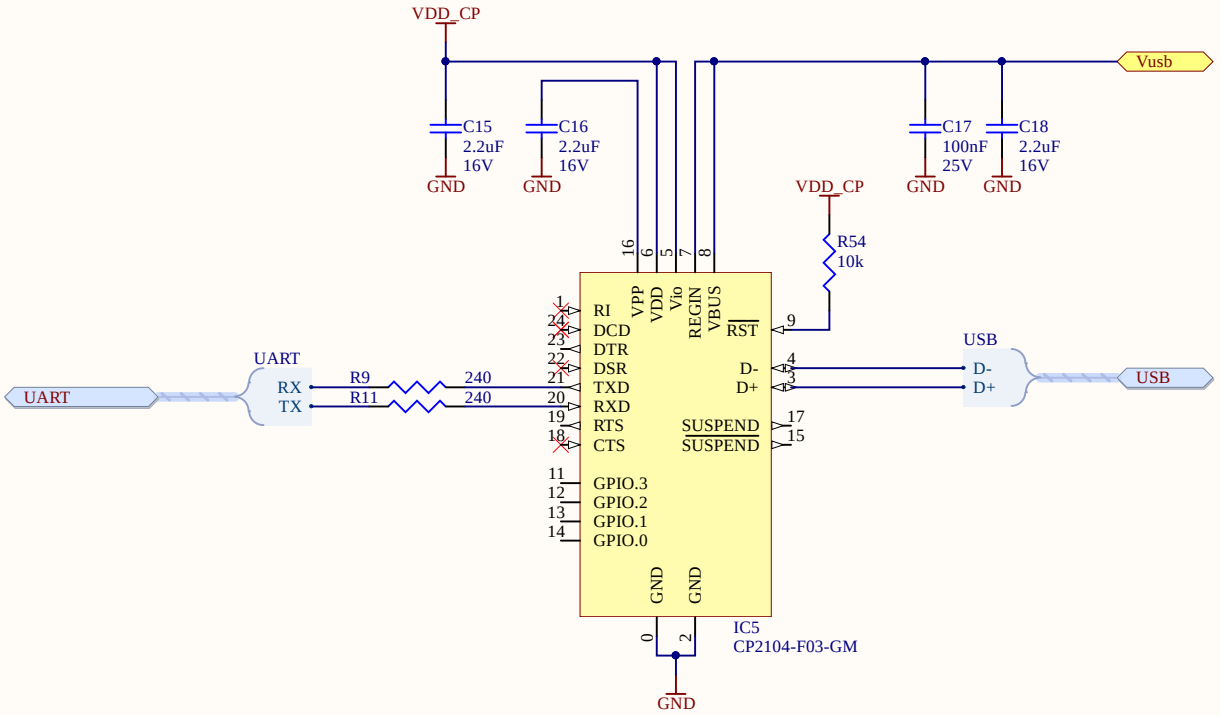

Title	***USB to serial***		
Size: A4	Number:*	Revision:*	
Date: 28-Mar-17	Time: 22:22:29	Sheet3 of 6	
File: C:\Projecten\DieBieSlave\Github\Hardware\DB10012_ControlUSBSerial.SchDoc			

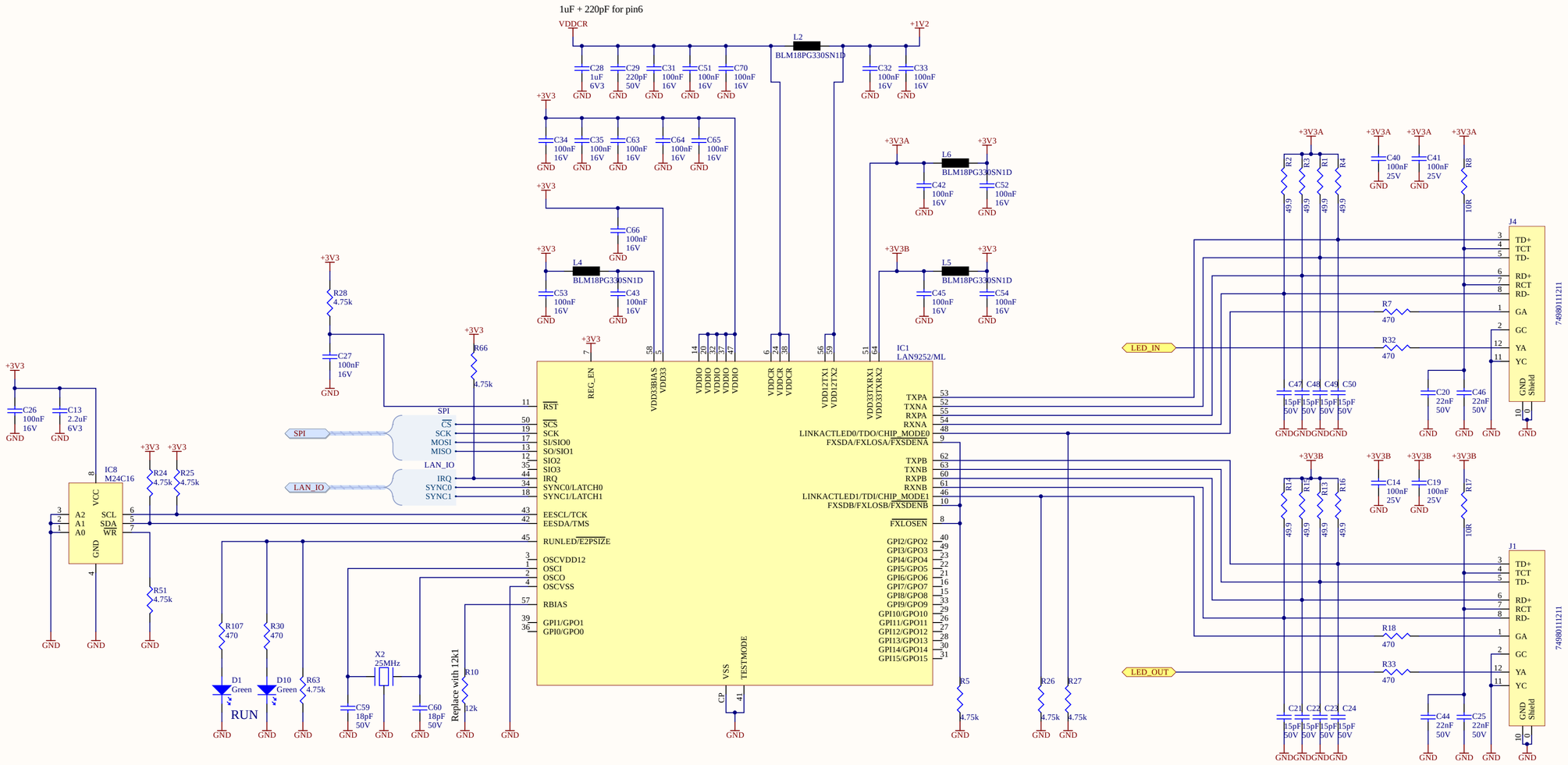

Title	*EtherCAT tranceiver*		
Size: A2	Number:*	Revision:*	
Date: 28-Mar-17	Time: 22:22:29	Sheet4 of 6	
File: C:\Projecten\DieBieSlave\Github\Hardware\DB10012_Control\EtherCAT.SchDoc			

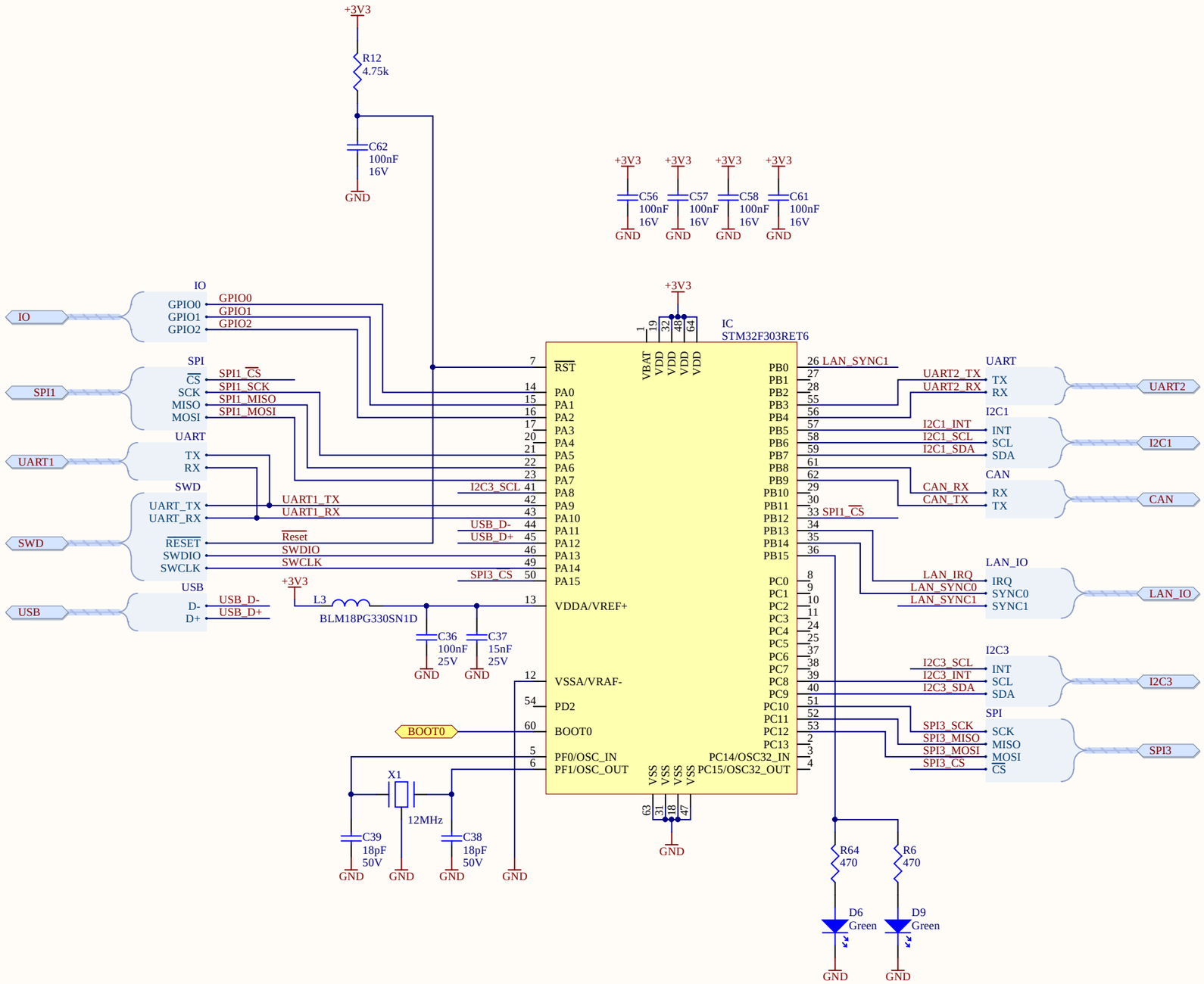

Title	*Microcontroller*		
Size: A3	Number:*	Revision:*	
Date: 28-Mar-17	Time: 22:22:29	Sheet5 of 6	
File: C:\Projecten\DieBieSlave\Github\Hardware\DB10012_ControlController.SchDoc			

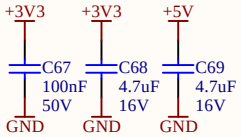

Title	***Header layour - TODO***		
Size: A4	Number:*	Revision:*	
Date: 28-Mar-17	Time: 22:22:29	Sheet6 of 6	
File: C:\Projecten\DieBieSlave\Github\Hardware\DB10012_ControlIOConnector.SchDoc			