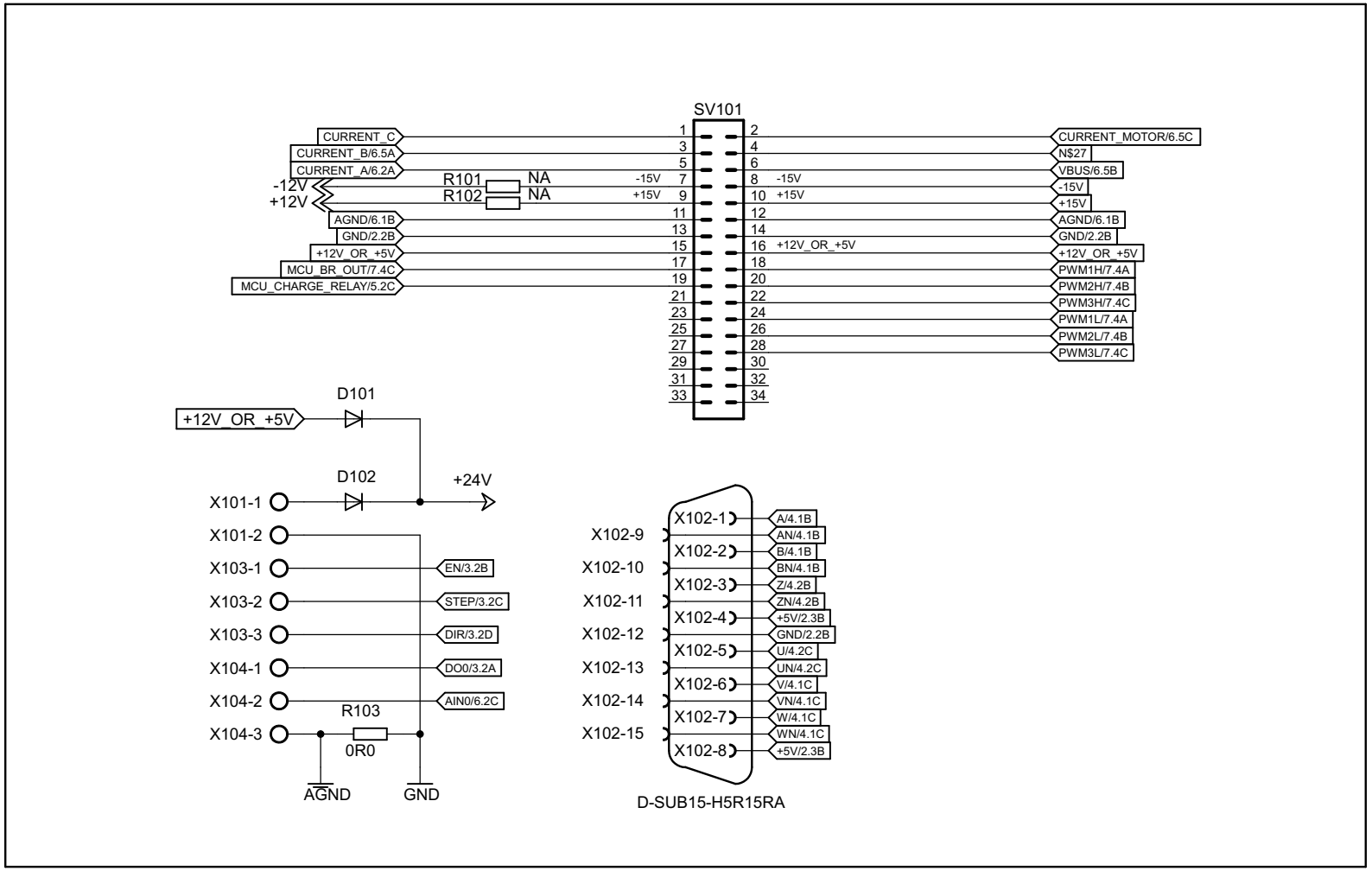

main

11.1.2018

Sheet: 1/9

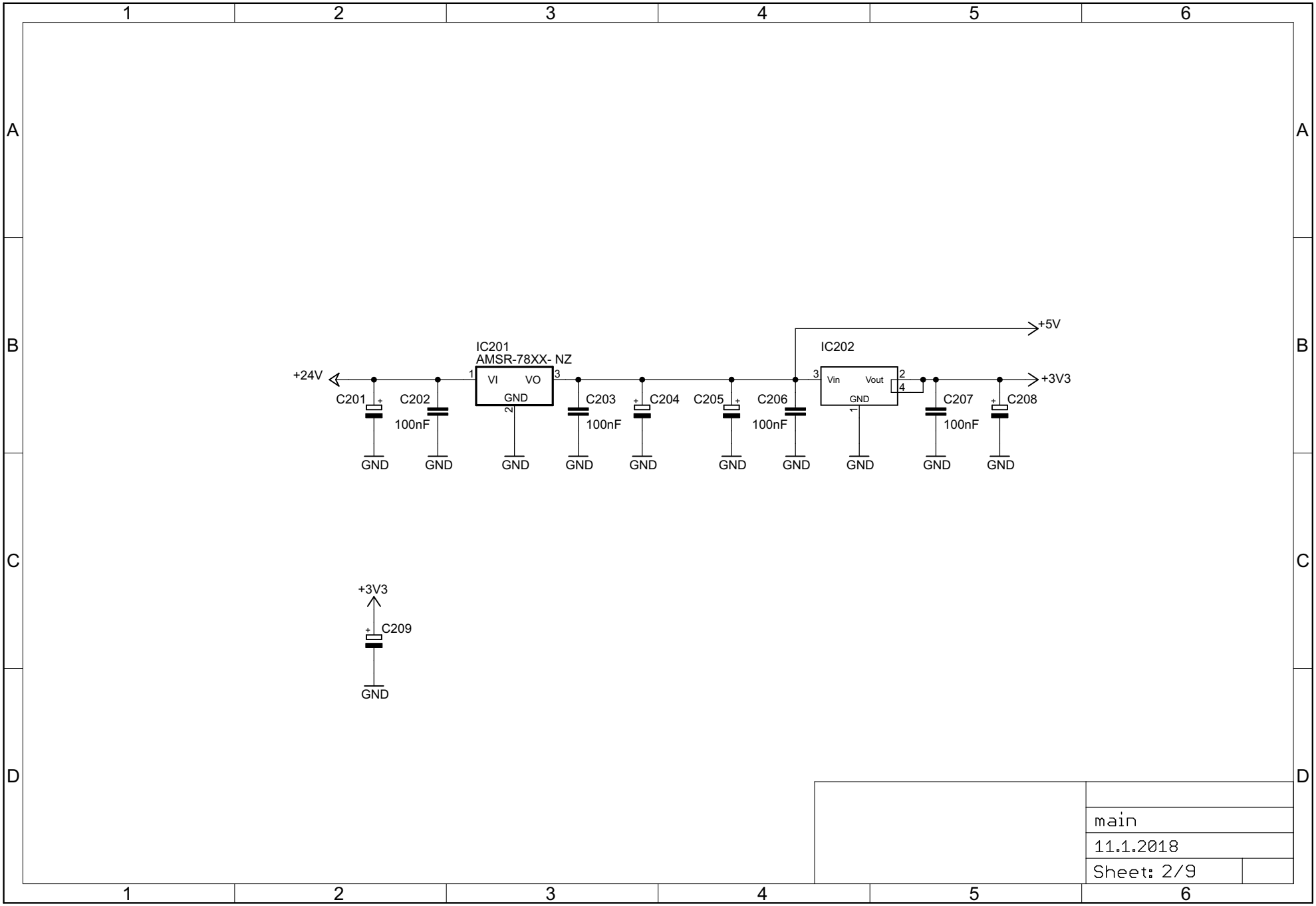

11.1.2018 г. 21:46:49 ч. D:\Developments\Elektronika\Motor Control\Projects\FOC Servo\Scheme and Board\STM34F4\v.0.0.1\main.sch (Sheet: 2/9)

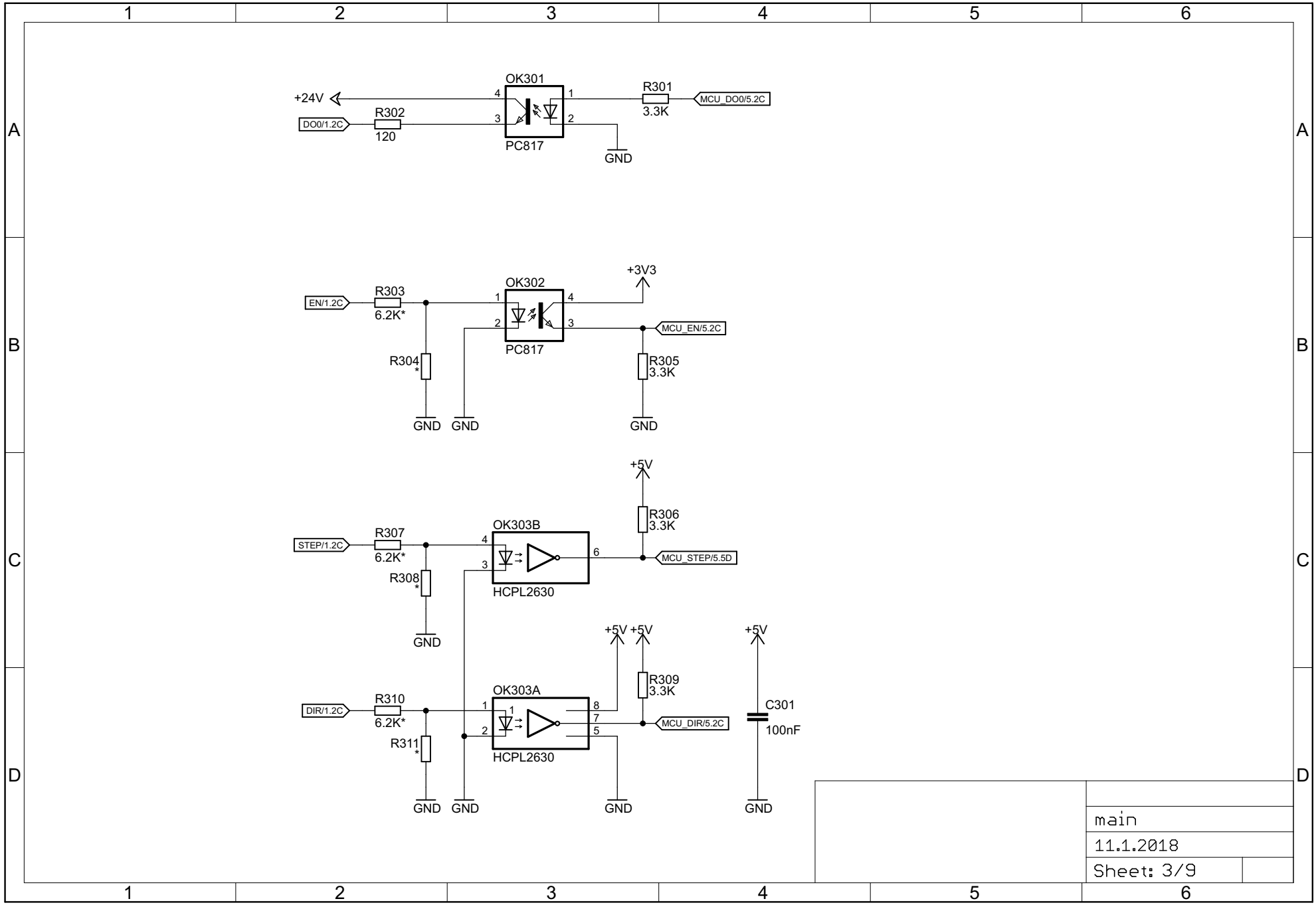

11.1.2018 г. 21:46:49 ч. D:\Developments\Elektronika\Motor Control\Projects\FOC Servo\Scheme and Board\STM34F4\v.0.0.1\main.sch (Sheet: 3/9)

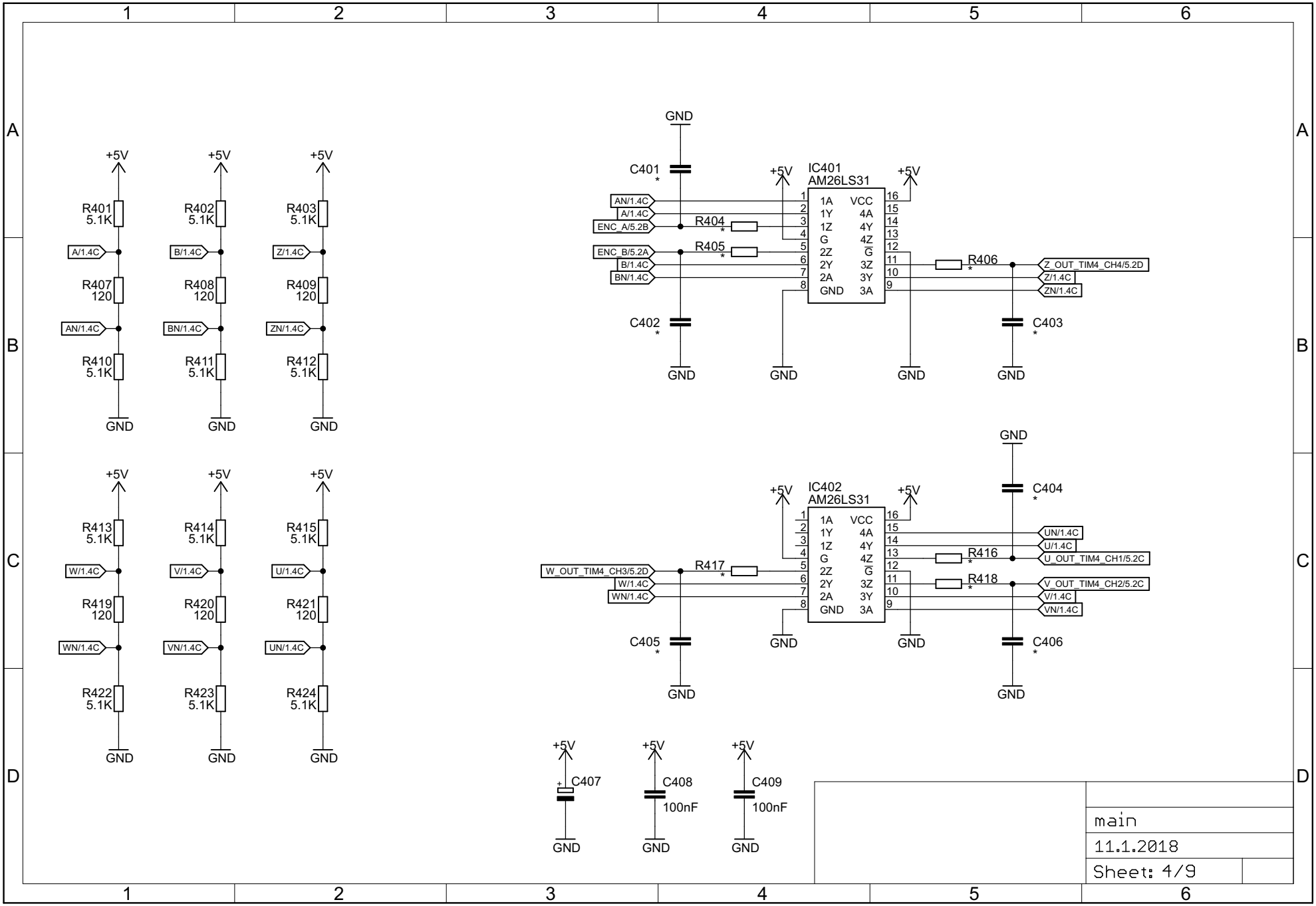
+5V
R401 5.1K
A/1.4C
R407 120
AN/1.4C
R410 5.1K
GND
R402 5.1K
B/1.4C
R408 120
BN/1.4C
R411 5.1K
R403 5.1K
Z/1.4C
R409 120
ZN/1.4C
R412 5.1K
R413 5.1K
W/1.4C
R419 120
WN/1.4C
R422 5.1K
R414 5.1K
V/1.4C
R420 120
VN/1.4C
R423 5.1K
R415 5.1K
U/1.4C
R421 120
UN/1.4C
R424 5.1K
C401 *
C402 *
IC401
AM26LS31
1A VCC
1Y 4A
1Z 4Y
G 4Z
2Z G
2Y 3Z
2A 3Y
GND 3A
AN/1.4C
A/1.4C
ENC_A/5.2B
R404 *
ENC_B/5.2A
R405 *
B/1.4C
BN/1.4C
R406 *
Z_OUT_TIM4_CH4/5.2D
Z/1.4C
ZN/1.4C
C403 *
C404 *
C405 *
C406 *
IC402
AM26LS31
W_OUT_TIM4_CH3/5.2D
R417 *
W/1.4C
WN/1.4C
UN/1.4C
U/1.4C
R416 *
U_OUT_TIM4_CH1/5.2C
R418 *
V_OUT_TIM4_CH2/5.2C
V/1.4C
VN/1.4C
C407
C408
100nF
C409
100nF
main
11.1.2018
Sheet: 4/9

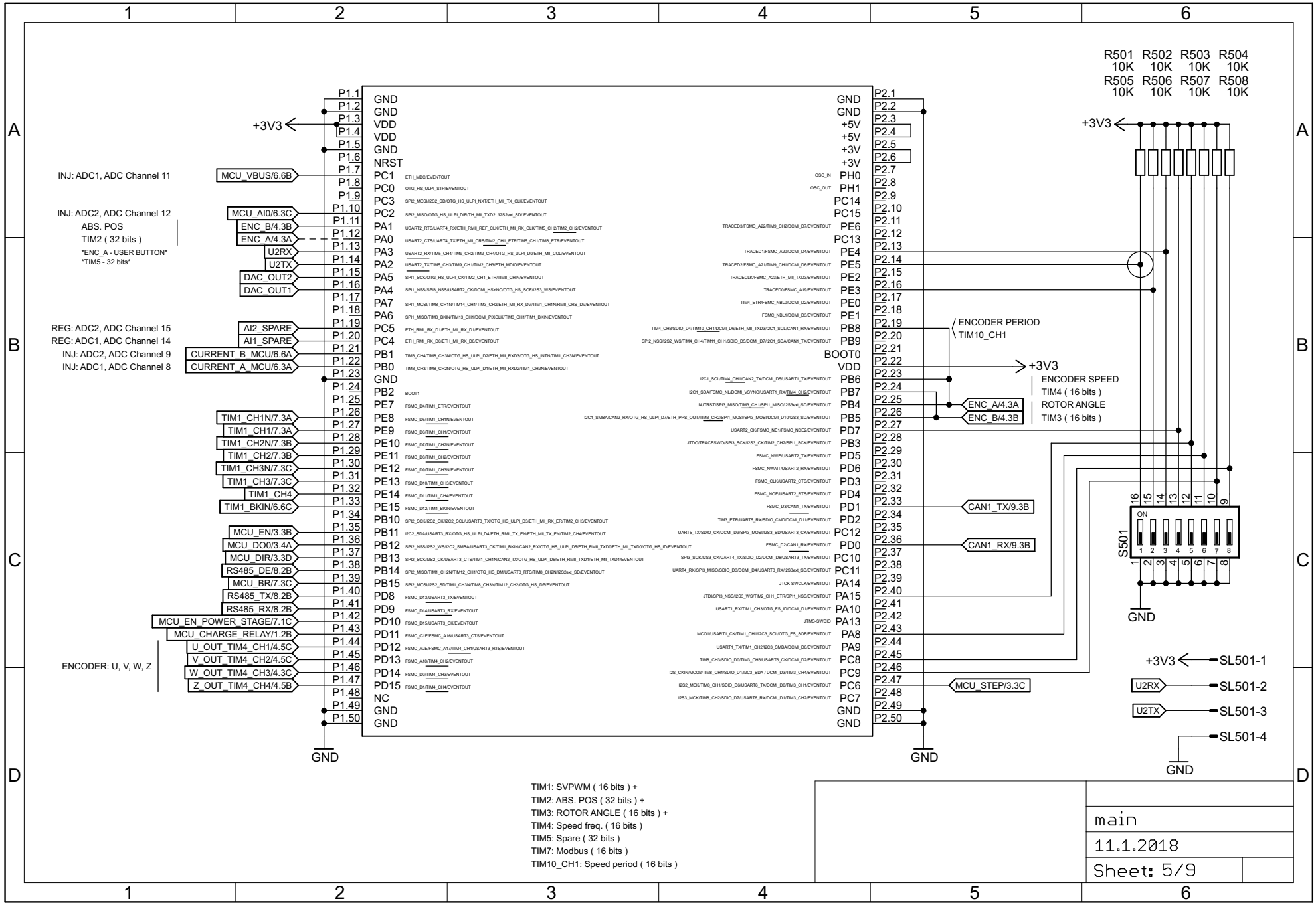
R501 10K R502 10K R503 10K R504 10K
R505 10K R506 10K R507 10K R508 10K
+3V3
INJ: ADC1, ADC Channel 11
MCU_VBUS/6.6B
INJ: ADC2, ADC Channel 12
ABS. POS
TIM2 (32 bits)
ENC_A - USER BUTTON
TIM5 - 32 bits
MCU_AI0/6.3C
ENC_B/4.3B
ENC_A/4.3A
U2RX
U2TX
DAC_OUT2
DAC_OUT1
REG: ADC2, ADC Channel 15
REG: ADC1, ADC Channel 14
INJ: ADC2, ADC Channel 9
INJ: ADC1, ADC Channel 8
AI2_SPARE
AI1_SPARE
CURRENT_B_MCU/6.6A
CURRENT_A_MCU/6.3A
TIM1_CH1N/7.3A
TIM1_CH1/7.3A
TIM1_CH2N/7.3B
TIM1_CH2/7.3B
TIM1_CH3N/7.3C
TIM1_CH3/7.3C
TIM1_CH4
TIM1_BKIN/6.6C
MCU_EN/3.3B
MCU_DO0/3.4A
MCU_DIR/3.3D
RS485_DE/8.2B
MCU_BR/7.3C
RS485_TX/8.2B
RS485_RX/8.2B
MCU_EN_POWER_STAGE/7.1C
MCU_CHARGE_RELAY/1.2B
U_OUT_TIM4_CH1/4.5C
V_OUT_TIM4_CH2/4.5C
W_OUT_TIM4_CH3/4.3C
Z_OUT_TIM4_CH4/4.5B
ENCODER: U, V, W, Z
GND
ENCODER PERIOD
TIM10_CH1
ENCODER SPEED
TIM4 (16 bits)
ROTOR ANGLE
TIM3 (16 bits)
CAN1_TX/9.3B
CAN1_RX/9.3B
MCU_STEP/3.3C
S501
ON
SL501-1
SL501-2
SL501-3
SL501-4
TIM1: SVPWM (16 bits) +
TIM2: ABS. POS (32 bits) +
TIM3: ROTOR ANGLE (16 bits) +
TIM4: Speed freq. (16 bits)
TIM5: Spare (32 bits)
TIM7: Modbus (16 bits)
TIM10_CH1: Speed period (16 bits)
main
11.1.2018
Sheet: 5/9

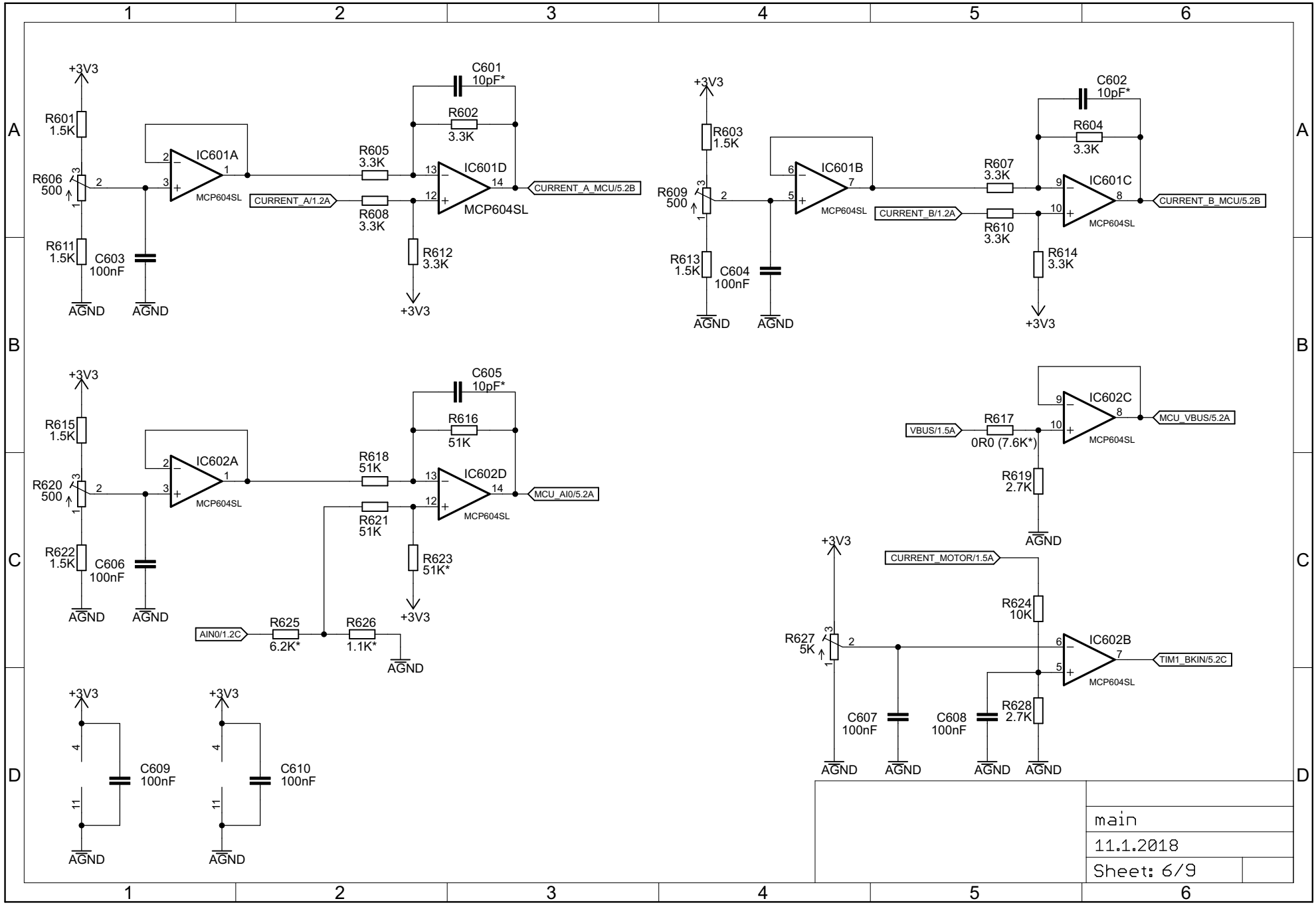

11.1.2018 г. 21:46:49 ч. D:\Developments\Elektronika\Motor Control\Projects\FOC Servo\Scheme and Board\STM34F4\v.0.0.1\main.sch (Sheet: 6/9)

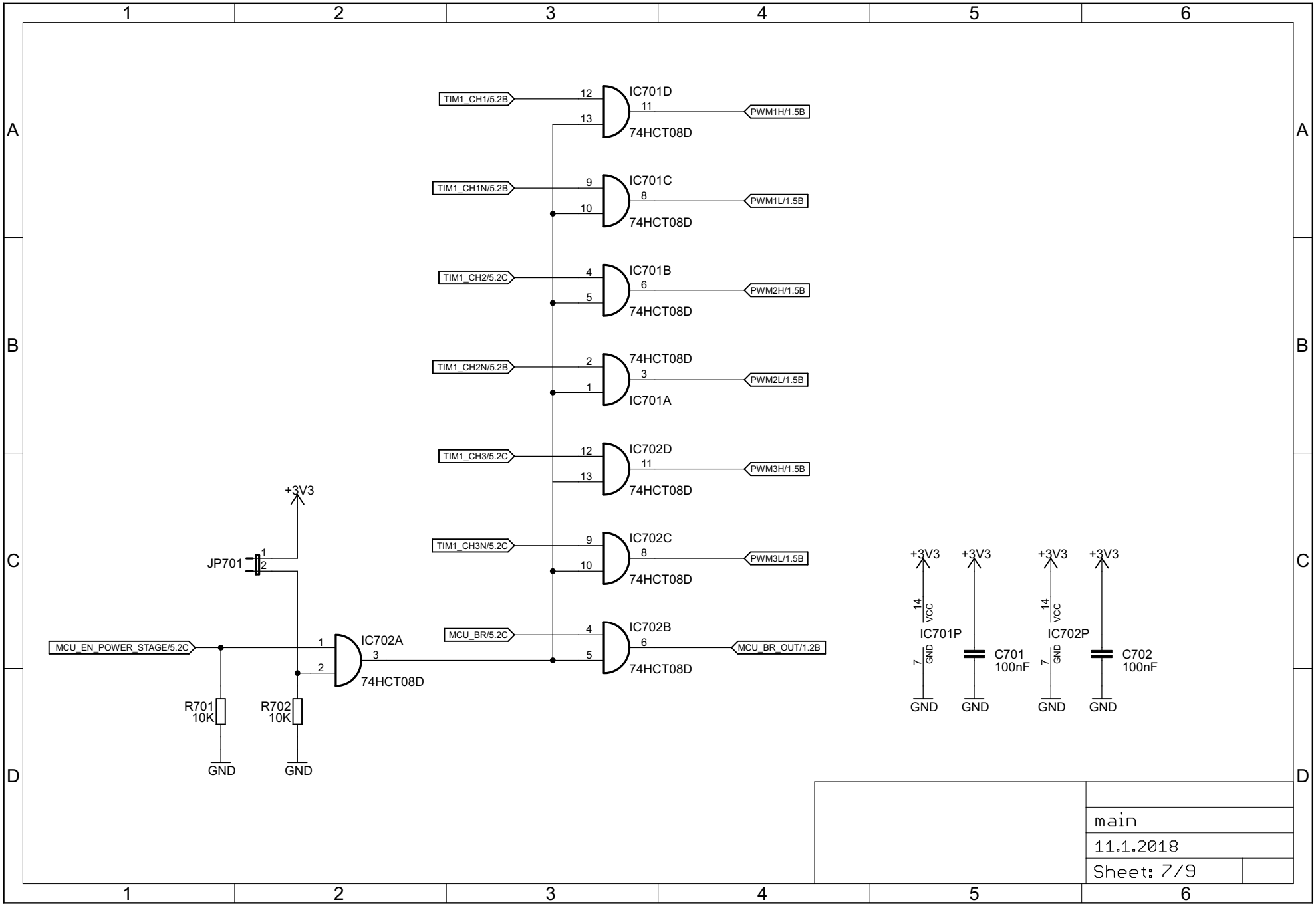
TIM1_CH1/5.2B
IC701D
74HCT08D
PWM1H/1.5B
TIM1_CH1N/5.2B
IC701C
74HCT08D
PWM1L/1.5B
TIM1_CH2/5.2C
IC701B
74HCT08D
PWM2H/1.5B
TIM1_CH2N/5.2B
74HCT08D
IC701A
PWM2L/1.5B
TIM1_CH3/5.2C
IC702D
74HCT08D
PWM3H/1.5B
TIM1_CH3N/5.2C
IC702C
74HCT08D
PWM3L/1.5B
MCU_BR/5.2C
IC702B
74HCT08D
MCU_BR_OUT/1.2B
+3V3
JP701
MCU_EN_POWER_STAGE/5.2C
IC702A
74HCT08D
R701
10K
R702
10K
GND
VCC
IC701P
IC702P
C701
100nF
C702
100nF
main
11.1.2018
Sheet: 7/9

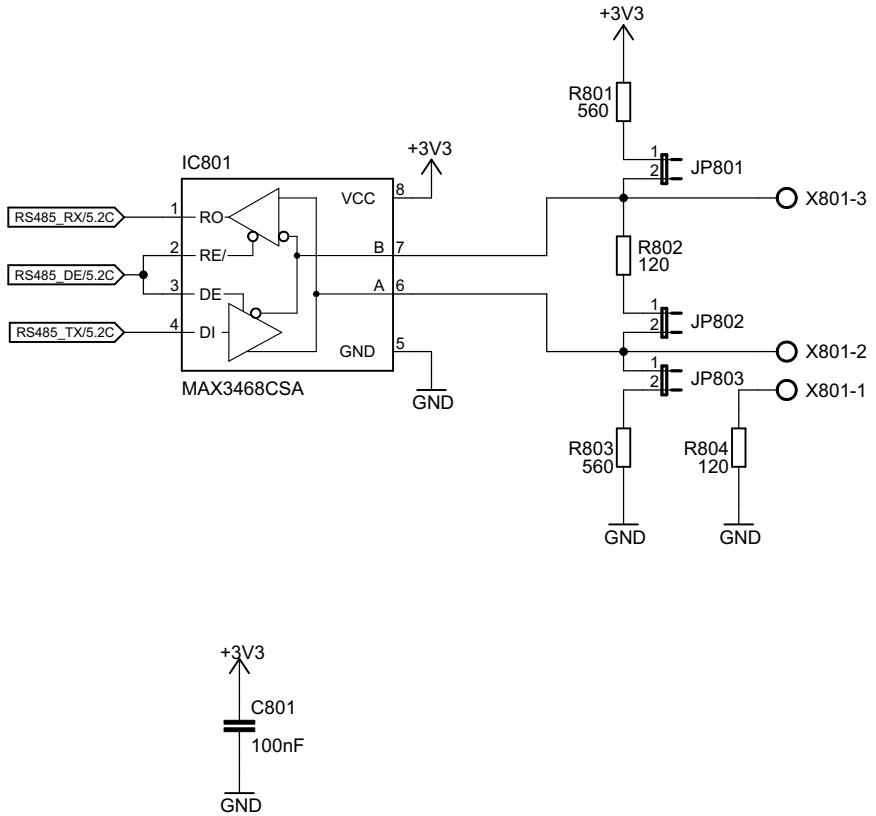

main

11.1.2018

Sheet: 8/9

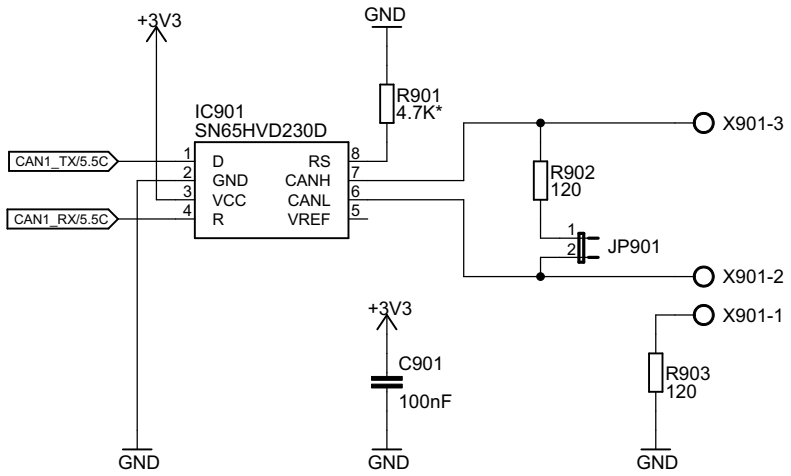

main

11.1.2018

Sheet: 9/9