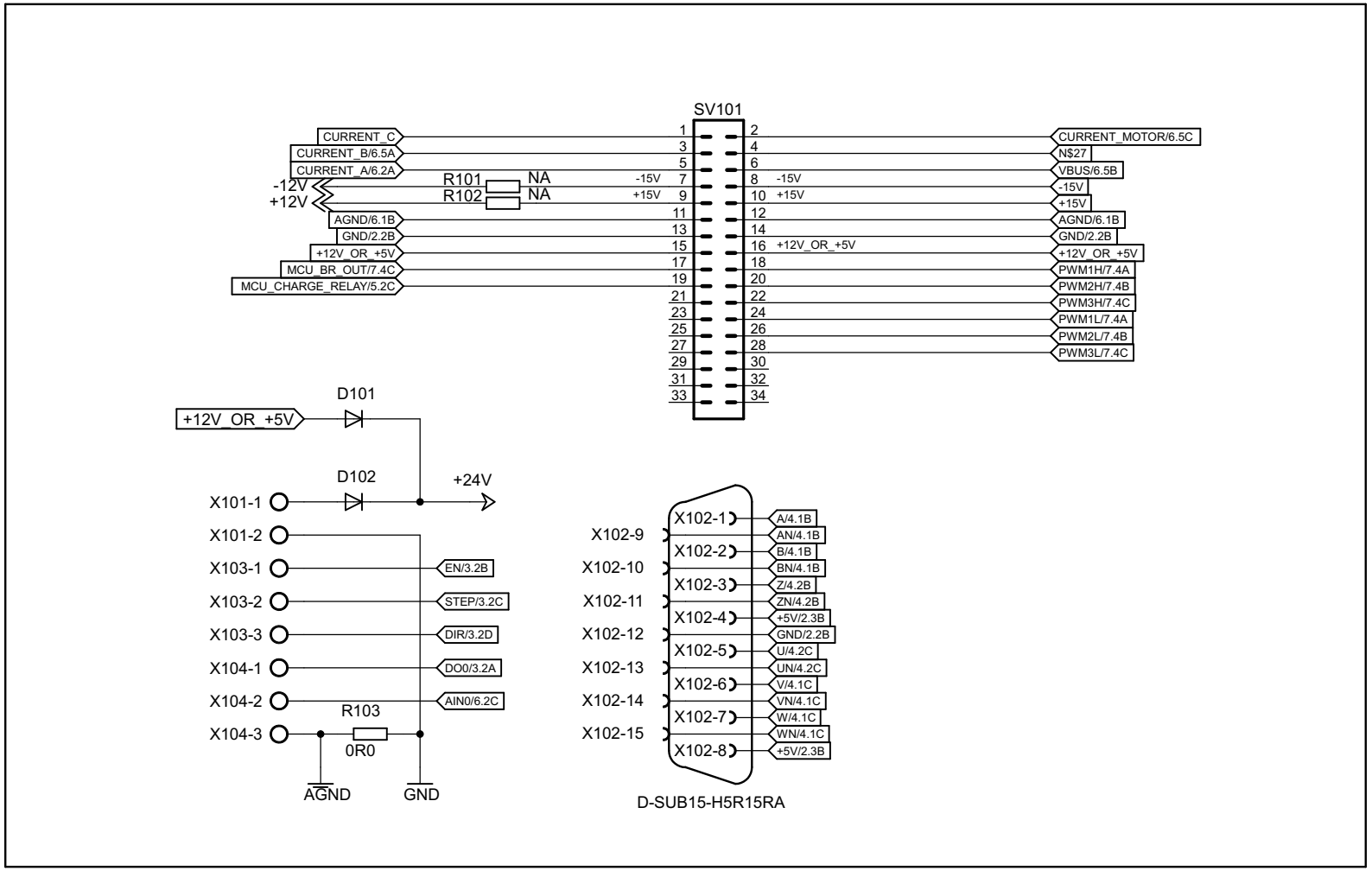

main

13.1.2018

Sheet: 1/9

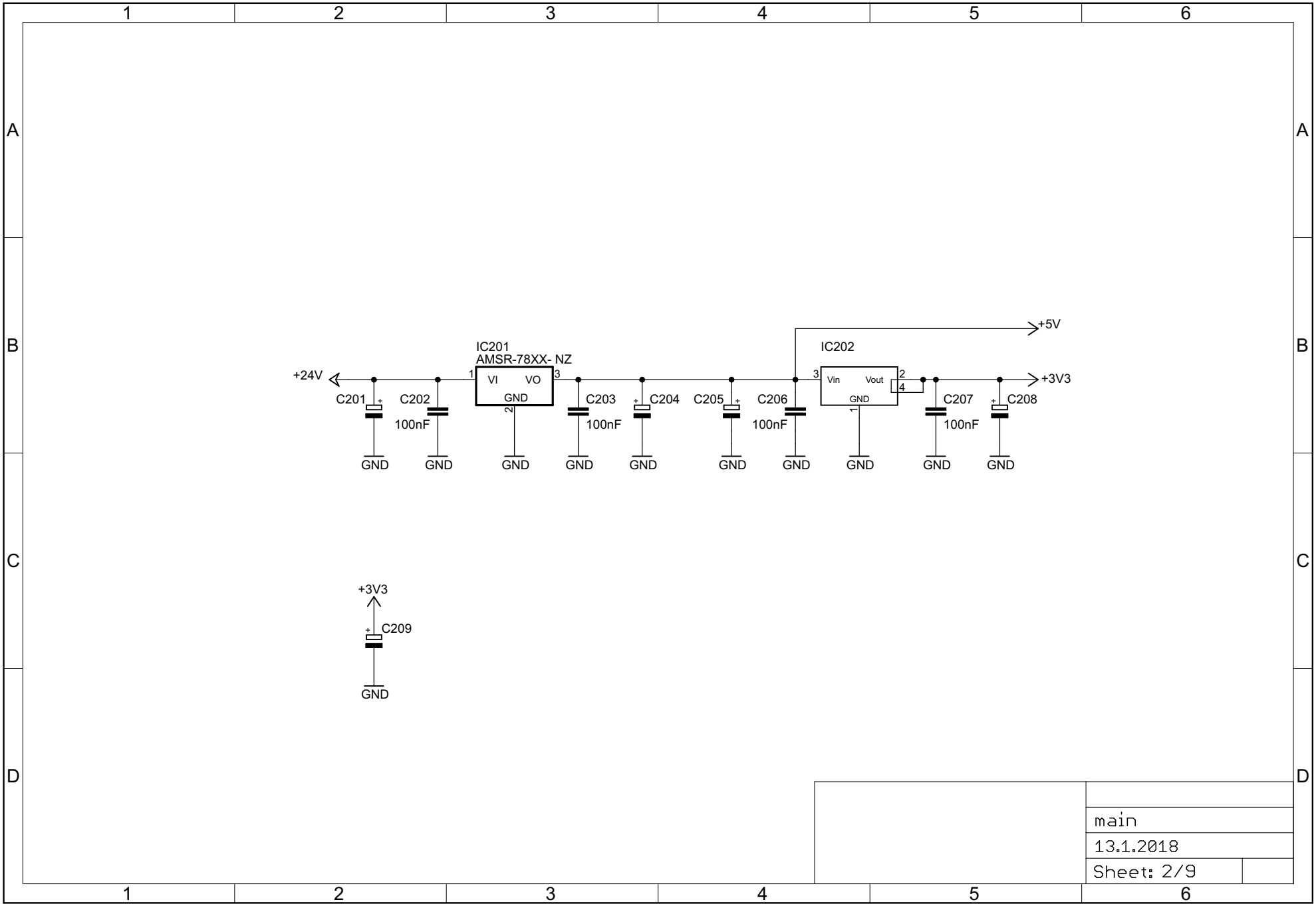

13.1.2018 г. 22:41:24 ч. D:\Developments\Elektronika\Motor Control\Projects\FOC Servo\Scheme and Board\STM34F4\v.0.0.1\main.sch (Sheet: 2/9)

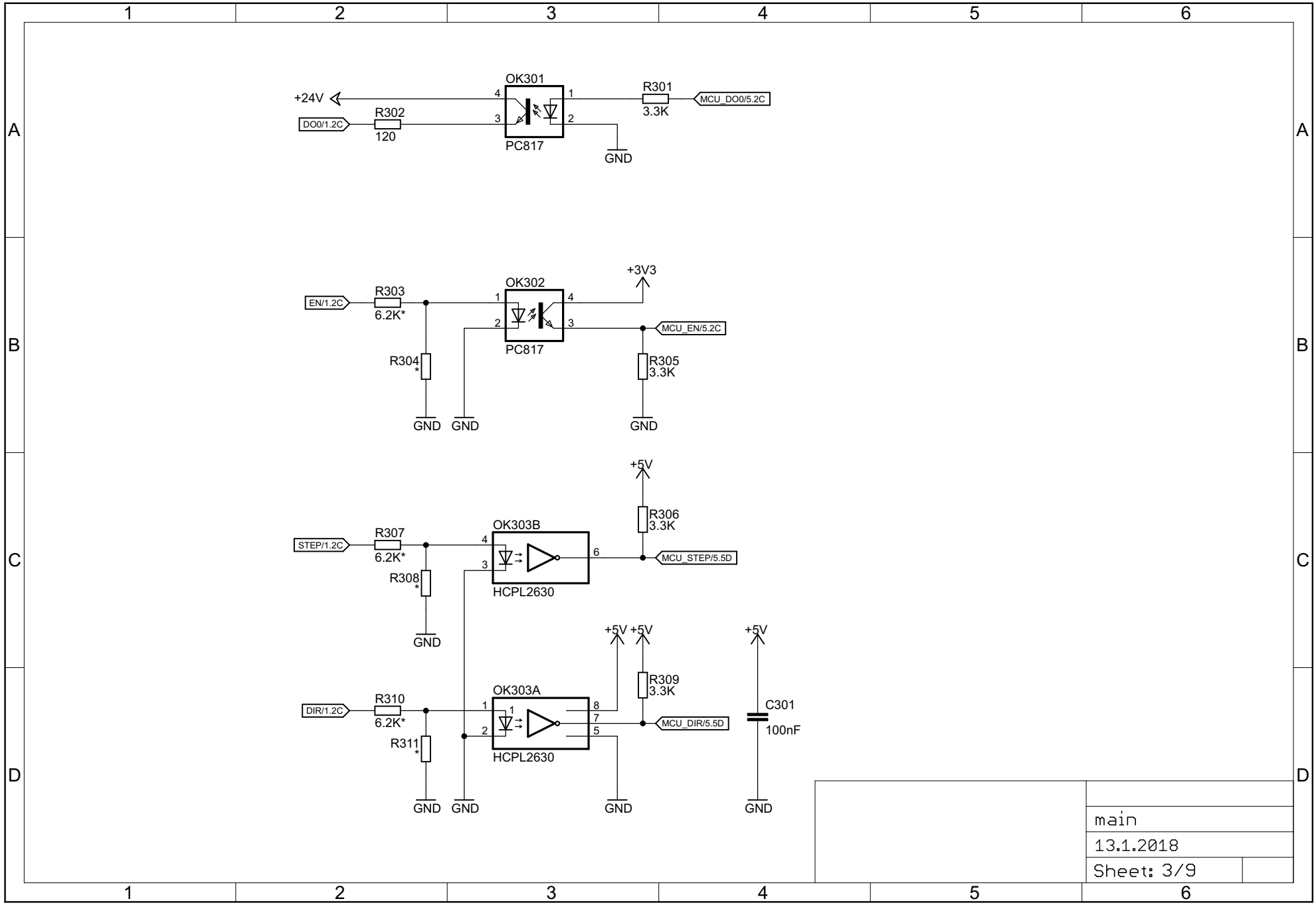
OK301
+24V
R302
120
DO0/1.2C
PC817
R301
3.3K
MCU_DO0/5.2C
GND
OK302
+3V3
R303
6.2K*
EN/1.2C
PC817
MCU_EN/5.2C
R304
*
R305
3.3K
GND
GND
GND
+5V
R306
3.3K
OK303B
R307
6.2K*
STEP/1.2C
HCPL2630
MCU_STEP/5.5D
R308
*
GND
+5V
+5V
+5V
R309
3.3K
OK303A
R310
6.2K*
DIR/1.2C
HCPL2630
MCU_DIR/5.5D
C301
100nF
R311
*
GND
GND
GND
GND
main
13.1.2018
Sheet: 3/9

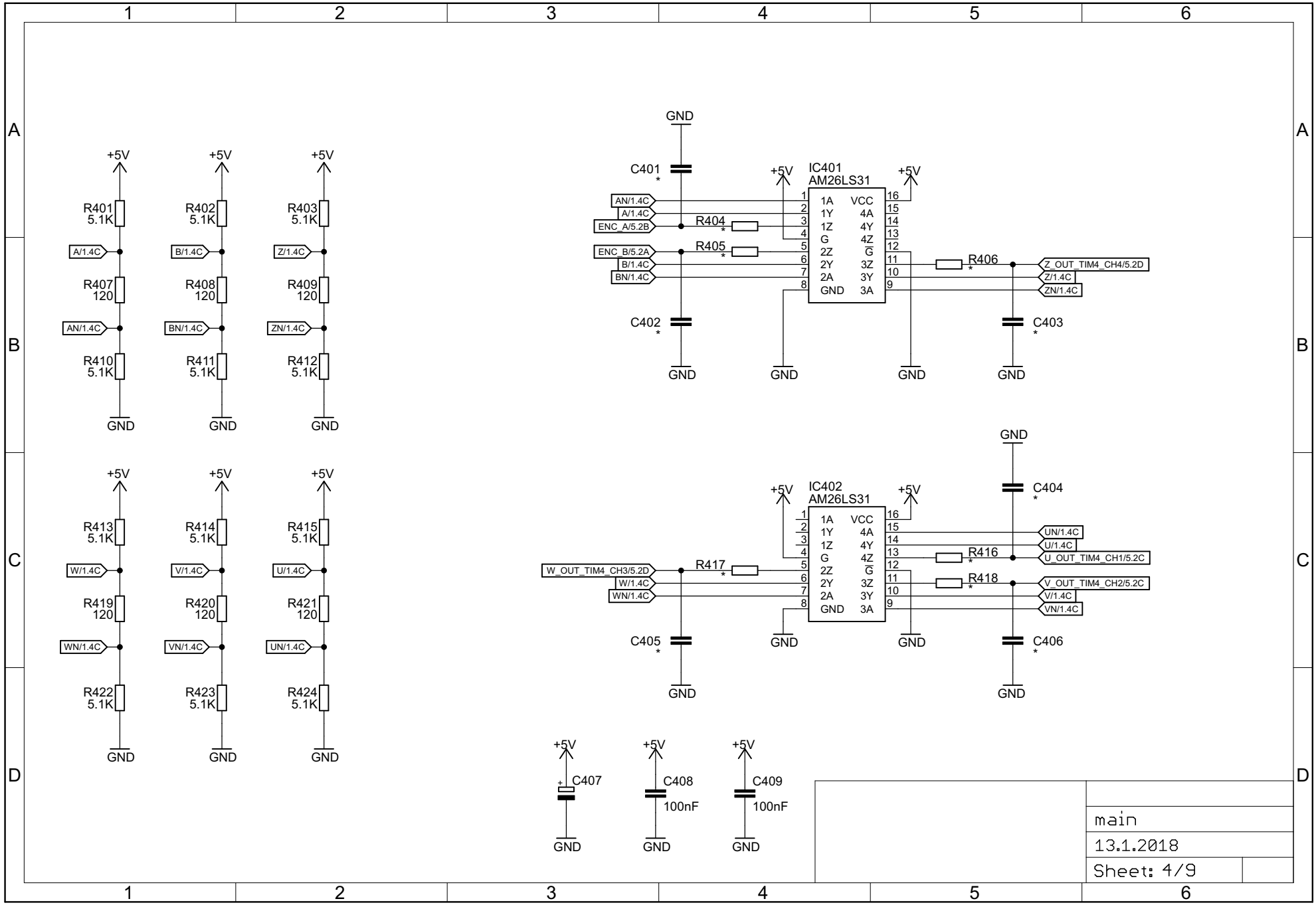

13.1.2018 г. 22:41:24 ч. D:\Developments\Elektronika\Motor Control\Projects\FOC Servo\Scheme and Board\STM34F4\v.0.0.1\main.sch (Sheet: 4/9)

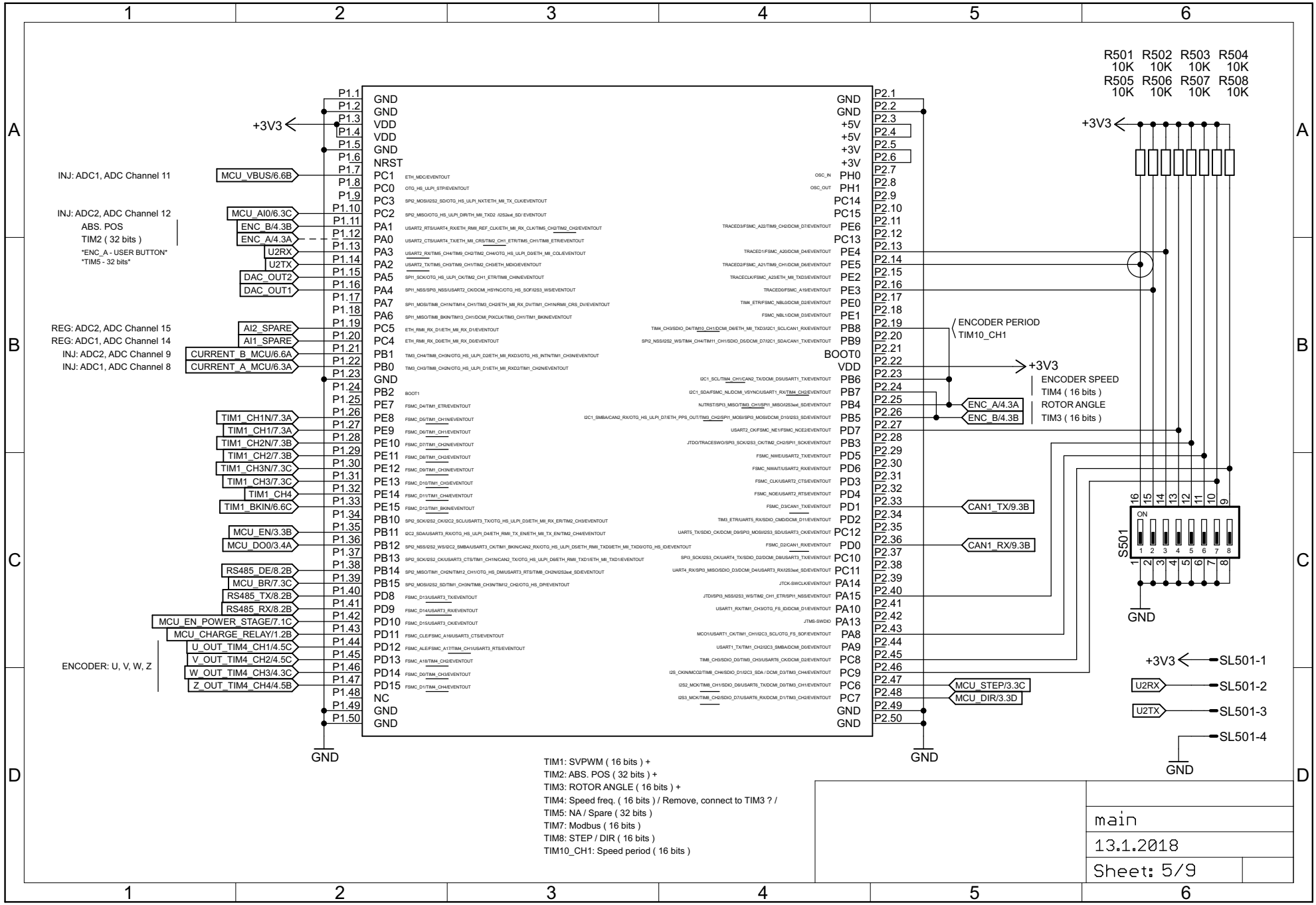

13.1.2018 г. 22:41:24 ч. D:\Developments\Elektronika\Motor Control\Projects\FOC Servo\Scheme and Board\STM34F4\v.0.0.1\main.sch (Sheet: 5/9)

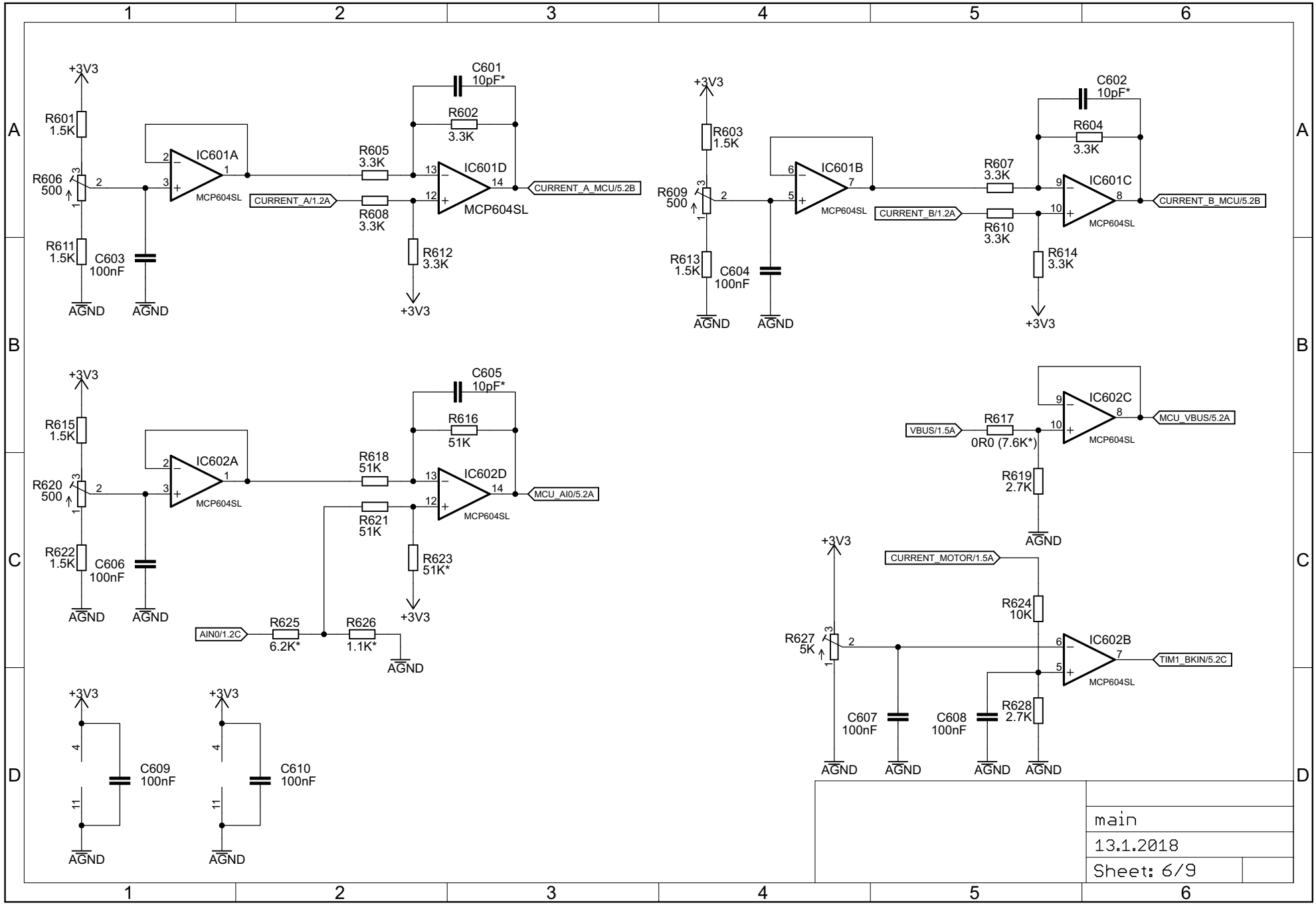

13.1.2018 г. 22:41:24 ч. D:\Developments\Elektronika\Motor Control\Projects\FOC Servo\Scheme and Board\STM34F4\v.0.0.1\main.sch (Sheet: 6/9)

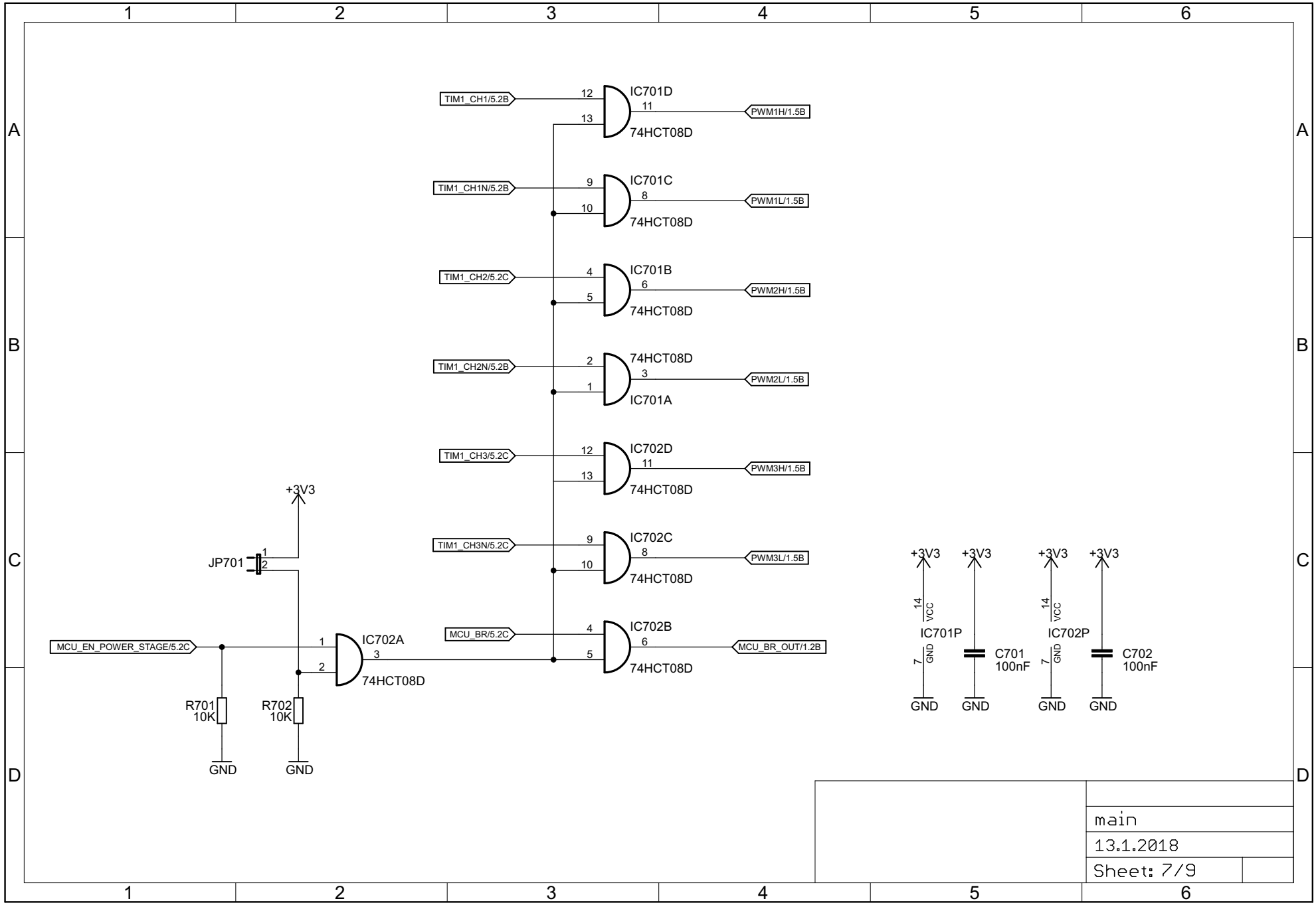

13.1.2018 г. 22:41:24 ч. D:\Developments\Elektronika\Motor Control\Projects\FOC Servo\Scheme and Board\STM34F4\v.0.0.1\main.sch (Sheet: 7/9)

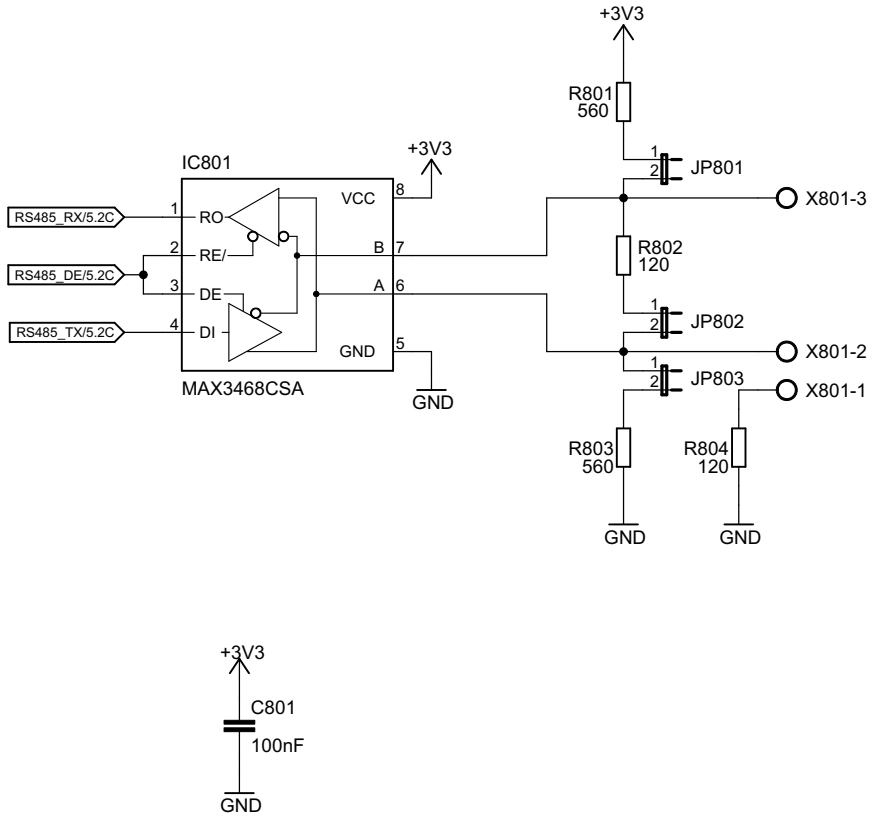

main

13.1.2018

Sheet: 8/9

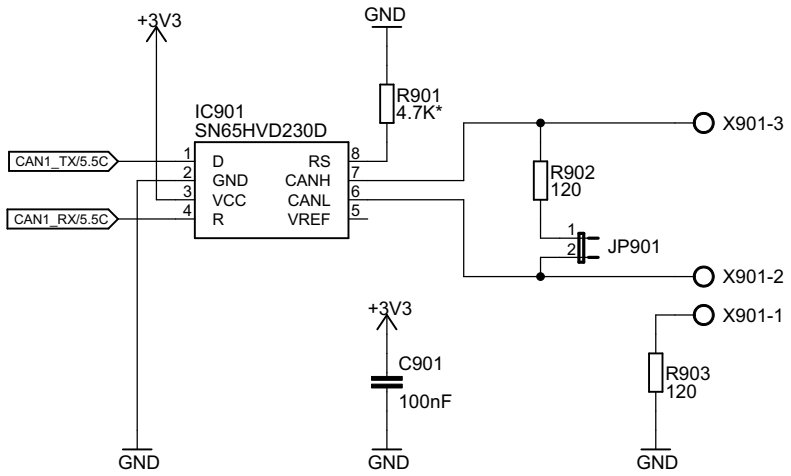

main

13.1.2018

Sheet: 9/9