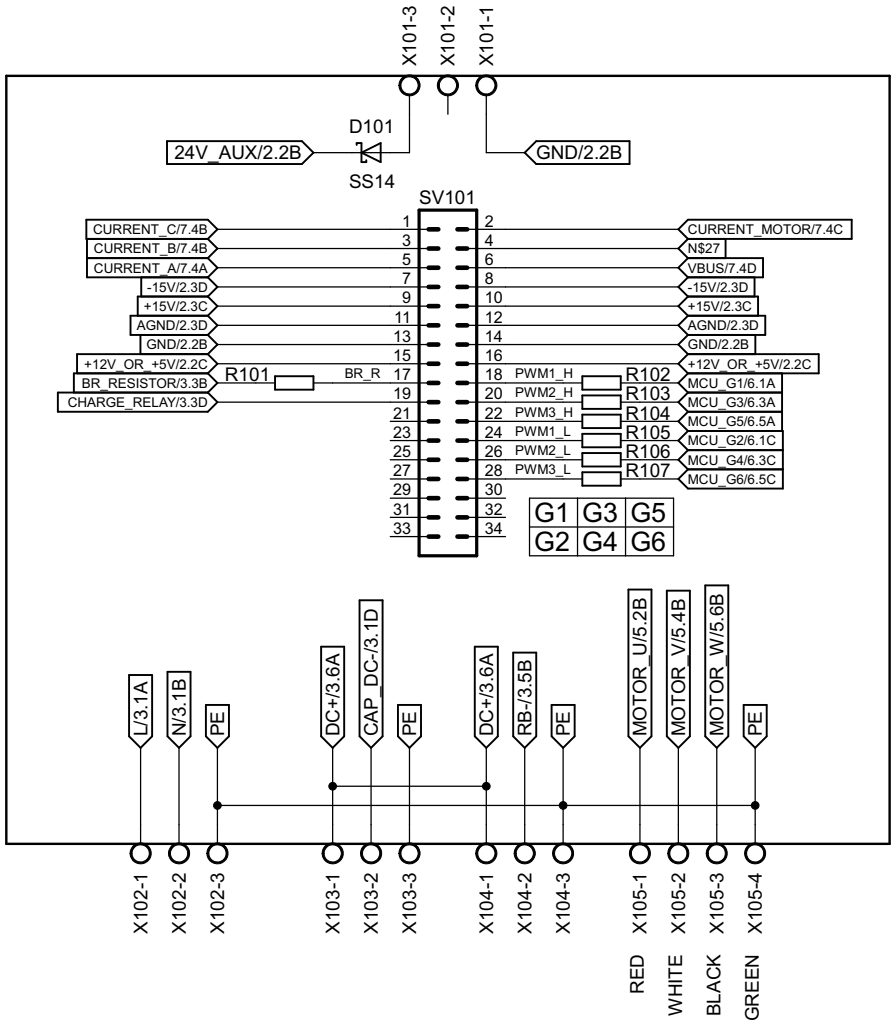

main

8.10.2017

Sheet: 1/7

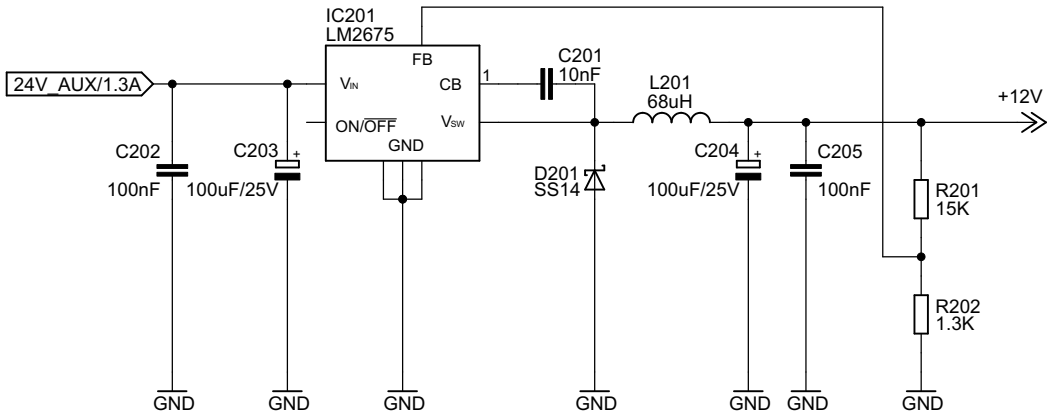

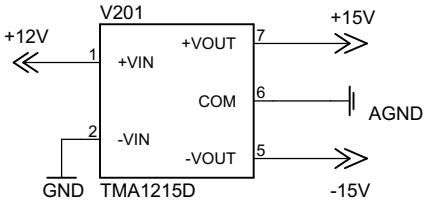

main

8.10.2017

Sheet: 2/7

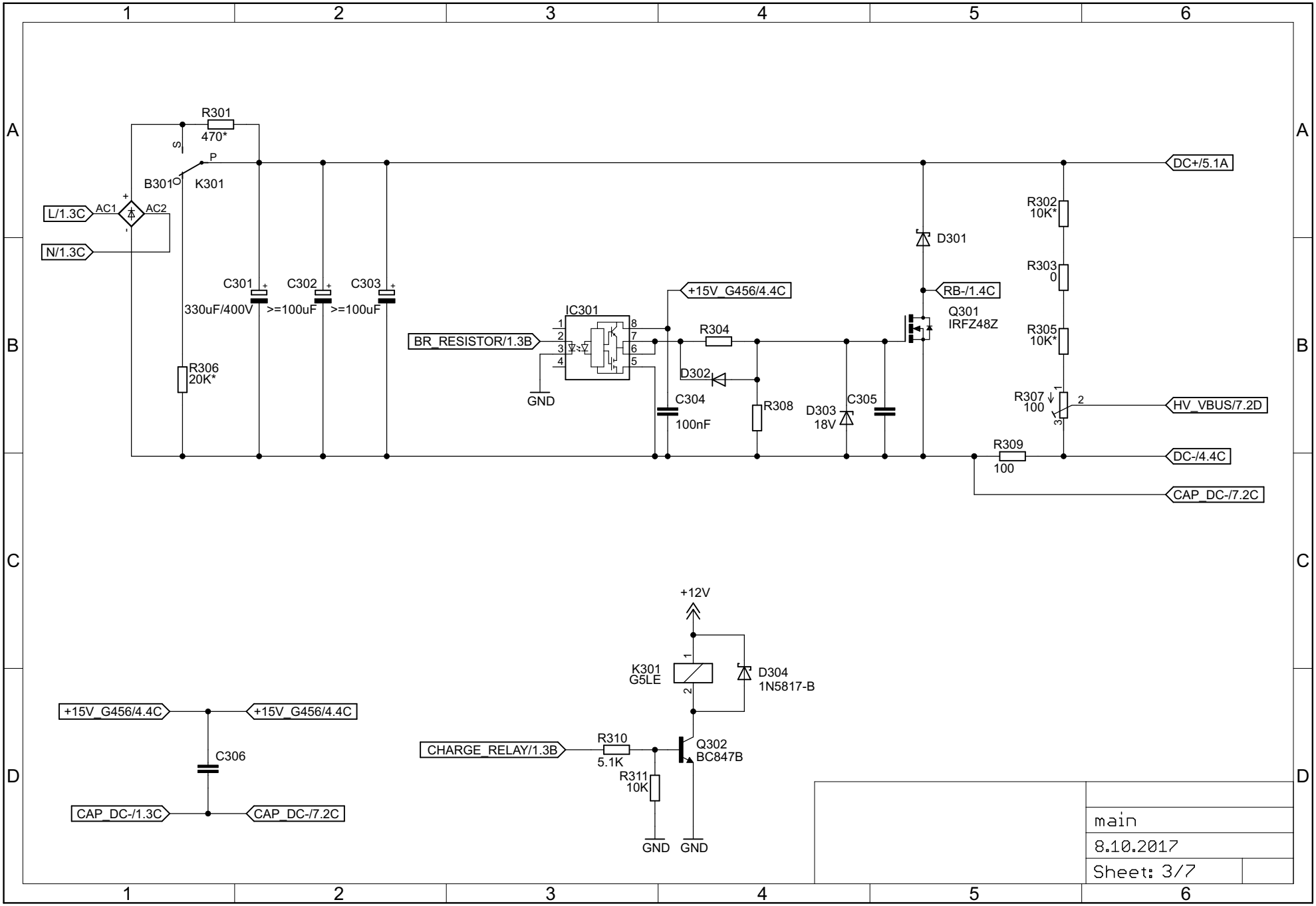

8.10.2017 г. 19:11:58 ч. D:\Developments\Elektronika\Motor Control\Projects\FOC Servo\Scheme and Board\Power Stage\v.0.0.0\main.sch (Sheet: 3/7)

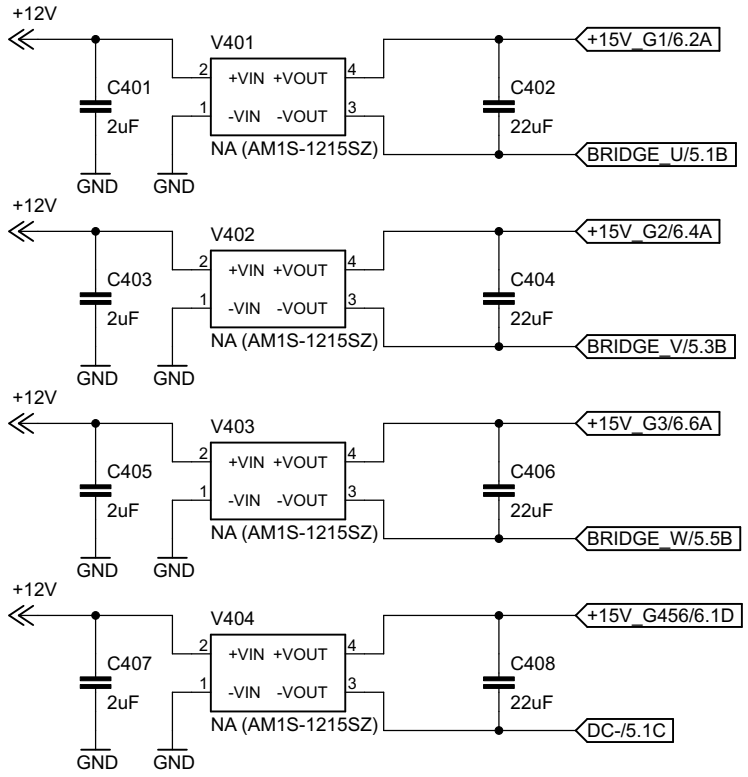

main

8.10.2017

Sheet: 4/7

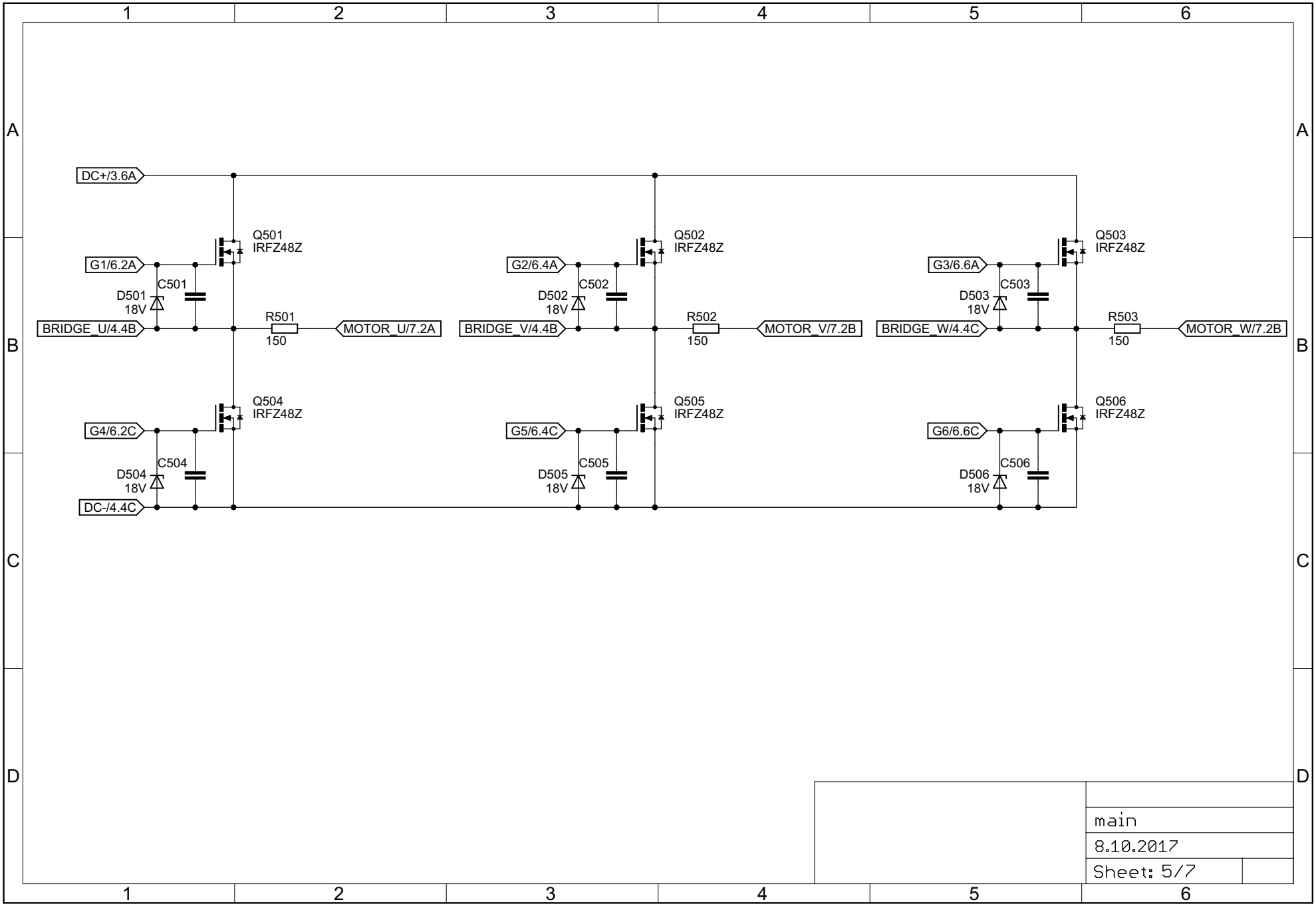

8.10.2017 г. 19:11:58 ч. D:\Developments\Elektronika\Motor Control\Projects\FOC Servo\Scheme and Board\Power Stage\v.0.0.0\main.sch (Sheet: 5/7)

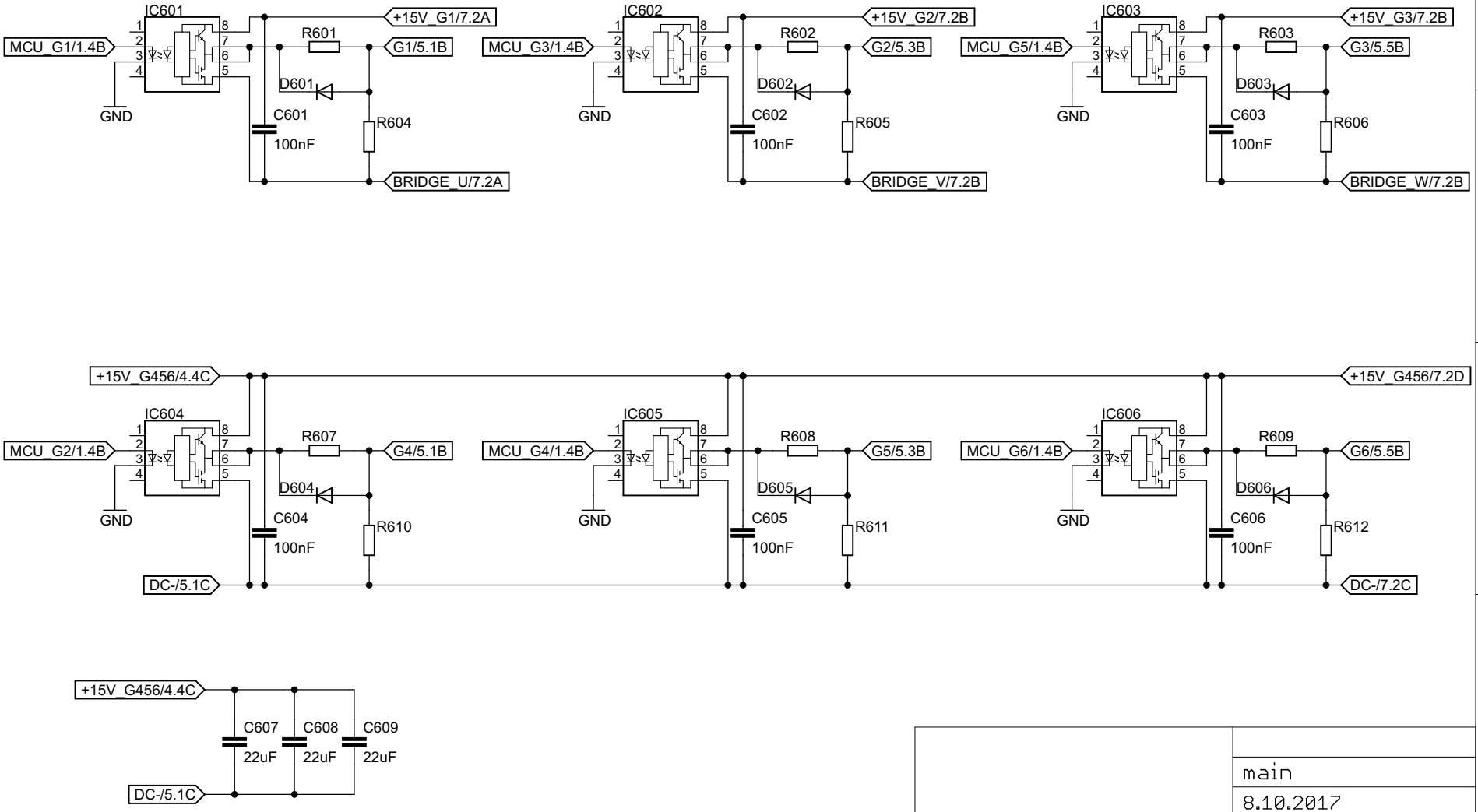

main

8.10.2017

Sheet: 6/7

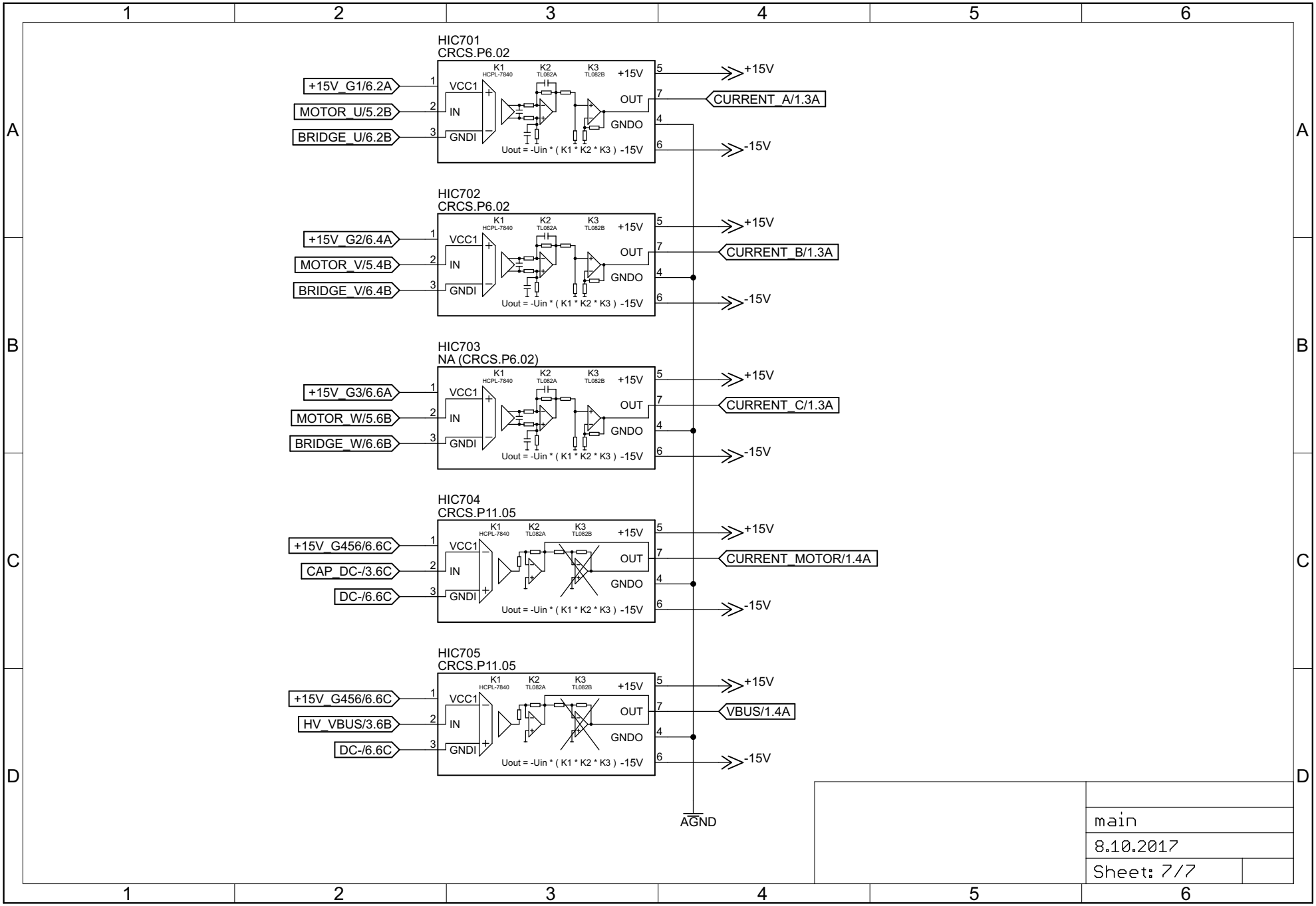

8.10.2017 г. 19:11:59 ч. D:\Developments\Elektronika\Motor Control\Projects\FOC Servo\Scheme and Board\Power Stage\v.0.0.0\main.sch (Sheet: 7/7)