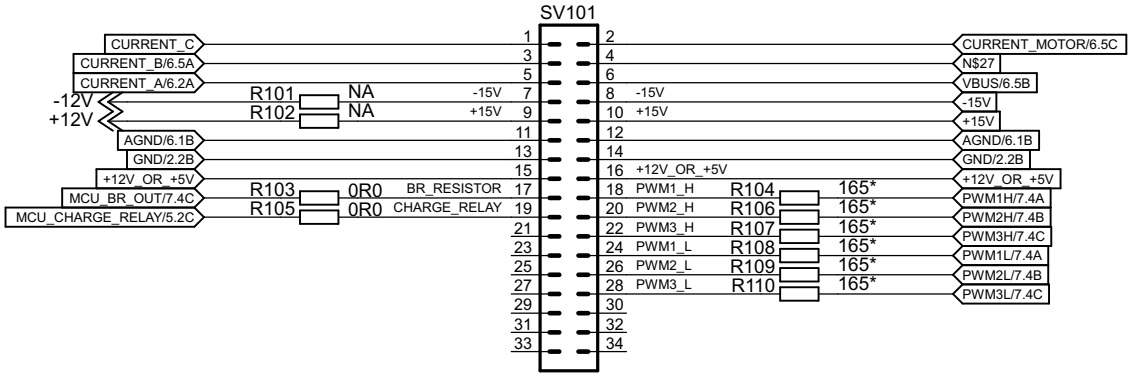

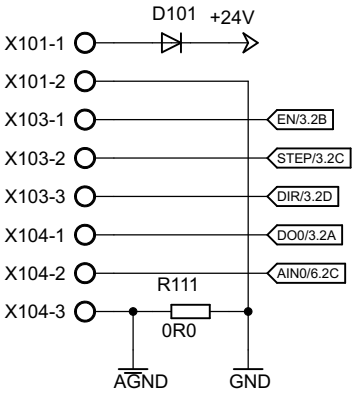

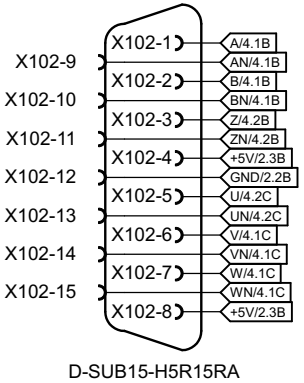

main

9.5.2017

Sheet: 1/9

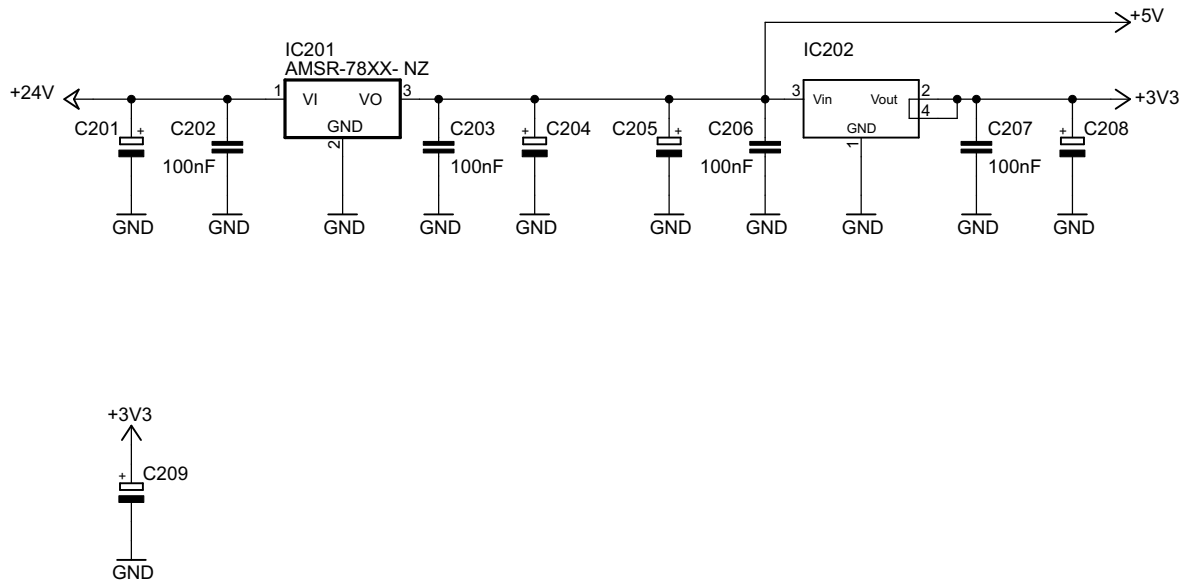

main

9.5.2017

Sheet: 2/9

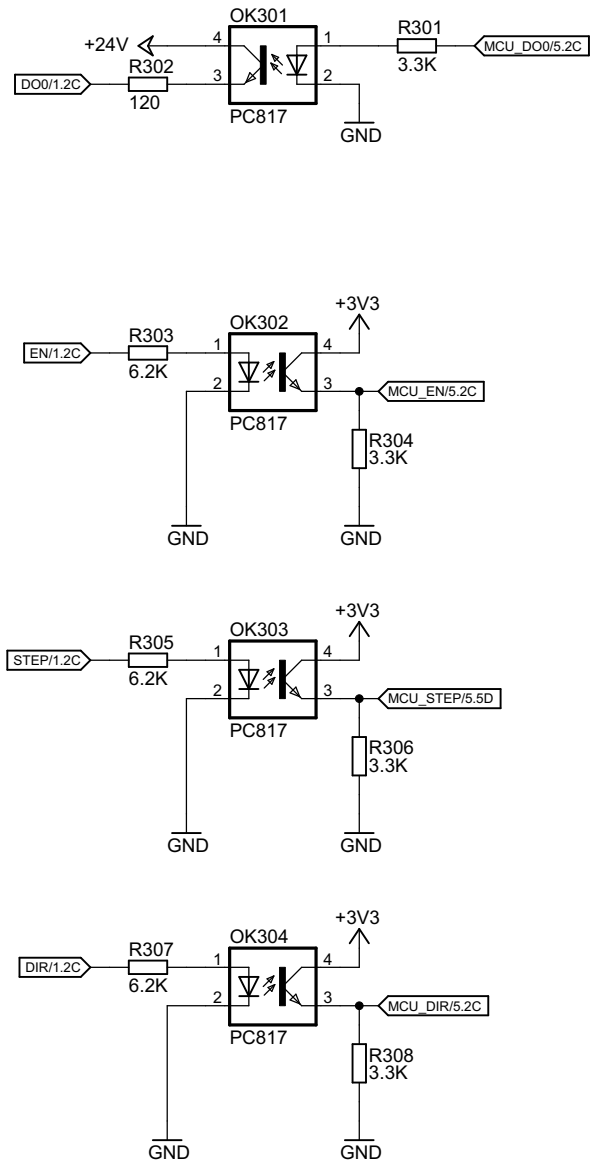

main

9.5.2017

Sheet: 3/9

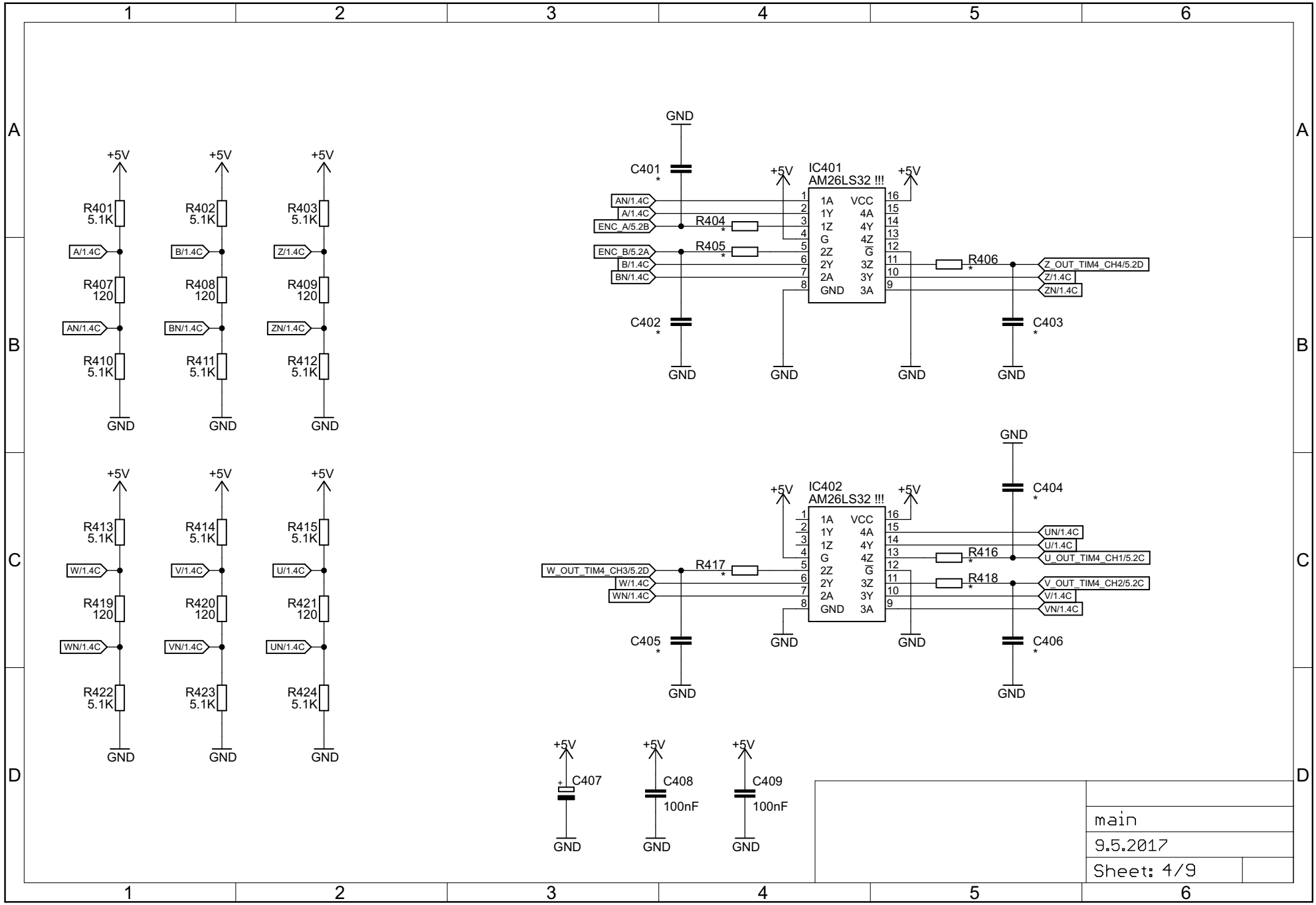

9.5.2017 г. 23:24:20 ч. D:\Developments\Elektronika\Motor Control\Projects\FOC Servo\Scheme and Board\STM34F4\v.0.0.0\main.sch (Sheet: 4/9)

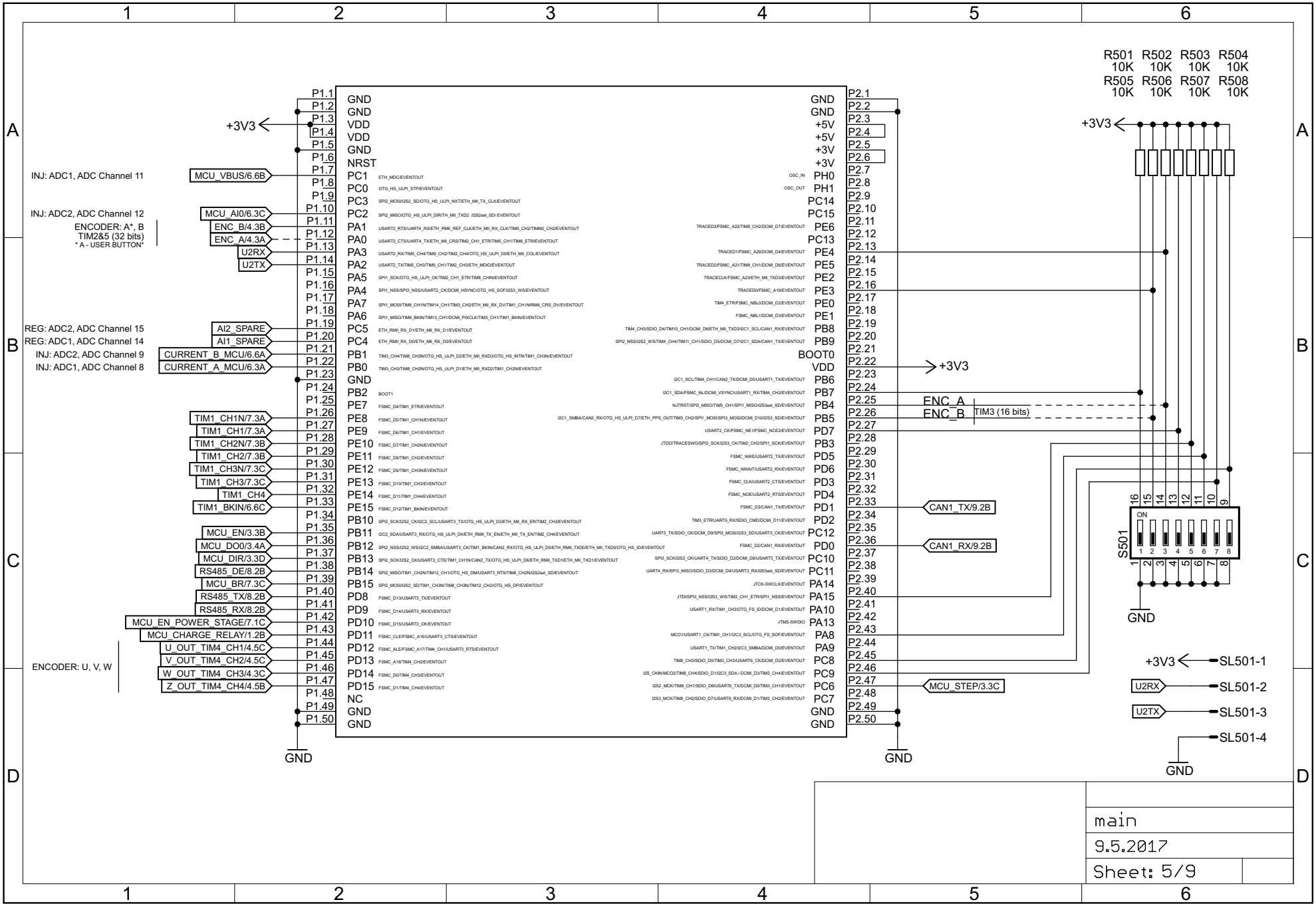
R501 10K
R502 10K
R503 10K
R504 10K
R505 10K
R506 10K
R507 10K
R508 10K
+3V3
INJ: ADC1, ADC Channel 11
MCU_VBUS/6.6B
INJ: ADC2, ADC Channel 12
ENCODER: A*, B
TIM2&5 (32 bits)
* A - USER BUTTON*
MCU_AI0/6.3C
ENC_B/4.3B
ENC_A/4.3A
U2RX
U2TX
REG: ADC2, ADC Channel 15
REG: ADC1, ADC Channel 14
INJ: ADC2, ADC Channel 9
INJ: ADC1, ADC Channel 8
AI2_SPARE
AI1_SPARE
CURRENT_B_MCU/6.6A
CURRENT_A_MCU/6.3A
TIM1_CH1N/7.3A
TIM1_CH1/7.3A
TIM1_CH2N/7.3B
TIM1_CH2/7.3B
TIM1_CH3N/7.3C
TIM1_CH3/7.3C
TIM1_CH4
TIM1_BKIN/6.6C
MCU_EN/3.3B
MCU_DO0/3.4A
MCU_DIR/3.3D
RS485_DE/8.2B
MCU_BR/7.3C
RS485_TX/8.2B
RS485_RX/8.2B
MCU_EN_POWER_STAGE/7.1C
MCU_CHARGE_RELAY/1.2B
U_OUT_TIM4_CH1/4.5C
V_OUT_TIM4_CH2/4.5C
W_OUT_TIM4_CH3/4.3C
Z_OUT_TIM4_CH4/4.5B
ENCODER: U, V, W
GND
ENC_A
ENC_B
TIM3 (16 bits)
CAN1_TX/9.2B
CAN1_RX/9.2B
MCU_STEP/3.3C
S501
ON
SL501-1
SL501-2
SL501-3
SL501-4
main
9.5.2017
Sheet: 5/9

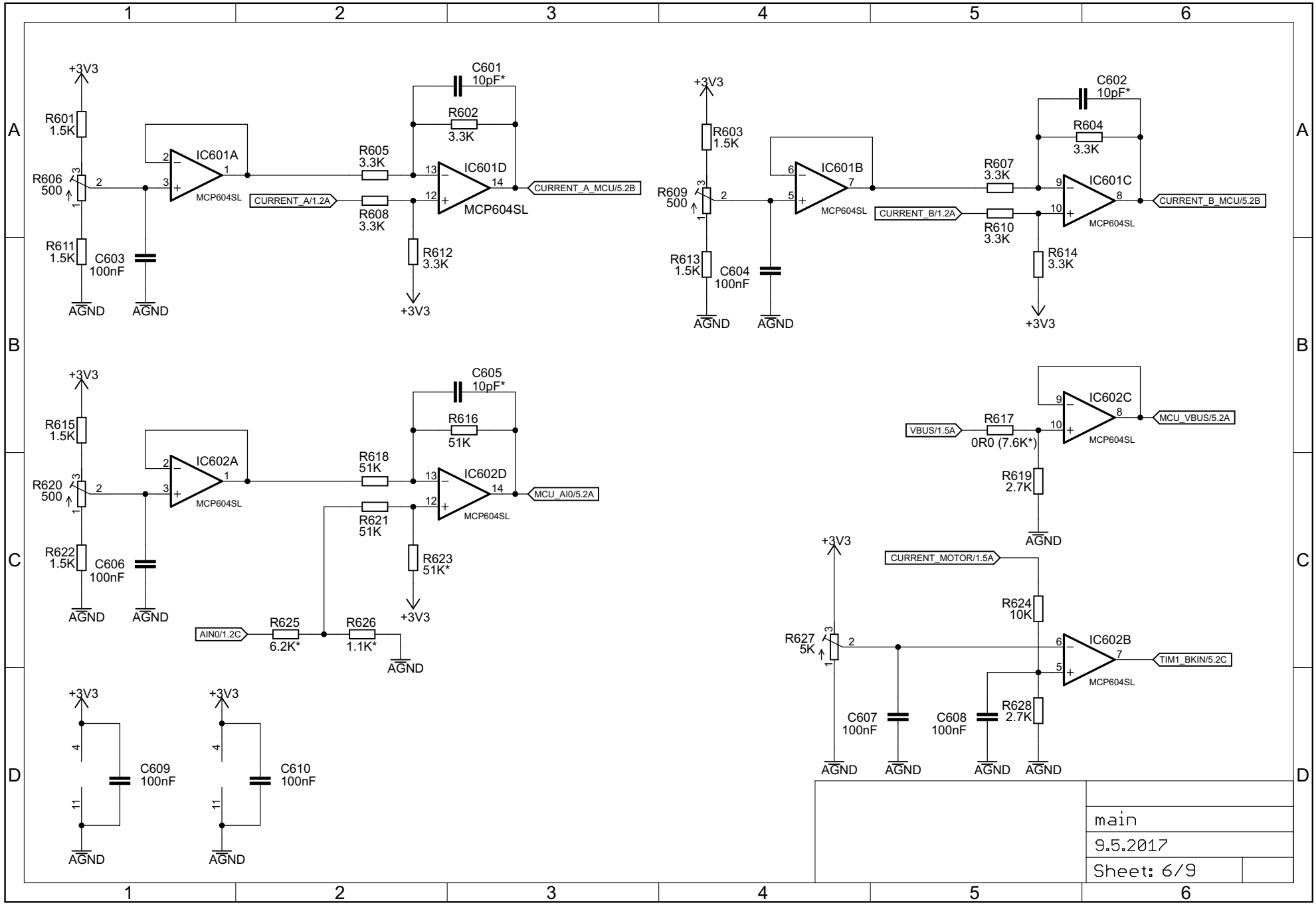

9.5.2017 г. 23:24:20 ч. D:\Developments\Elektronika\Motor Control\Projects\FOC Servo\Scheme and Board\STM34F4\v.0.0.0\main.sch (Sheet: 6/9)

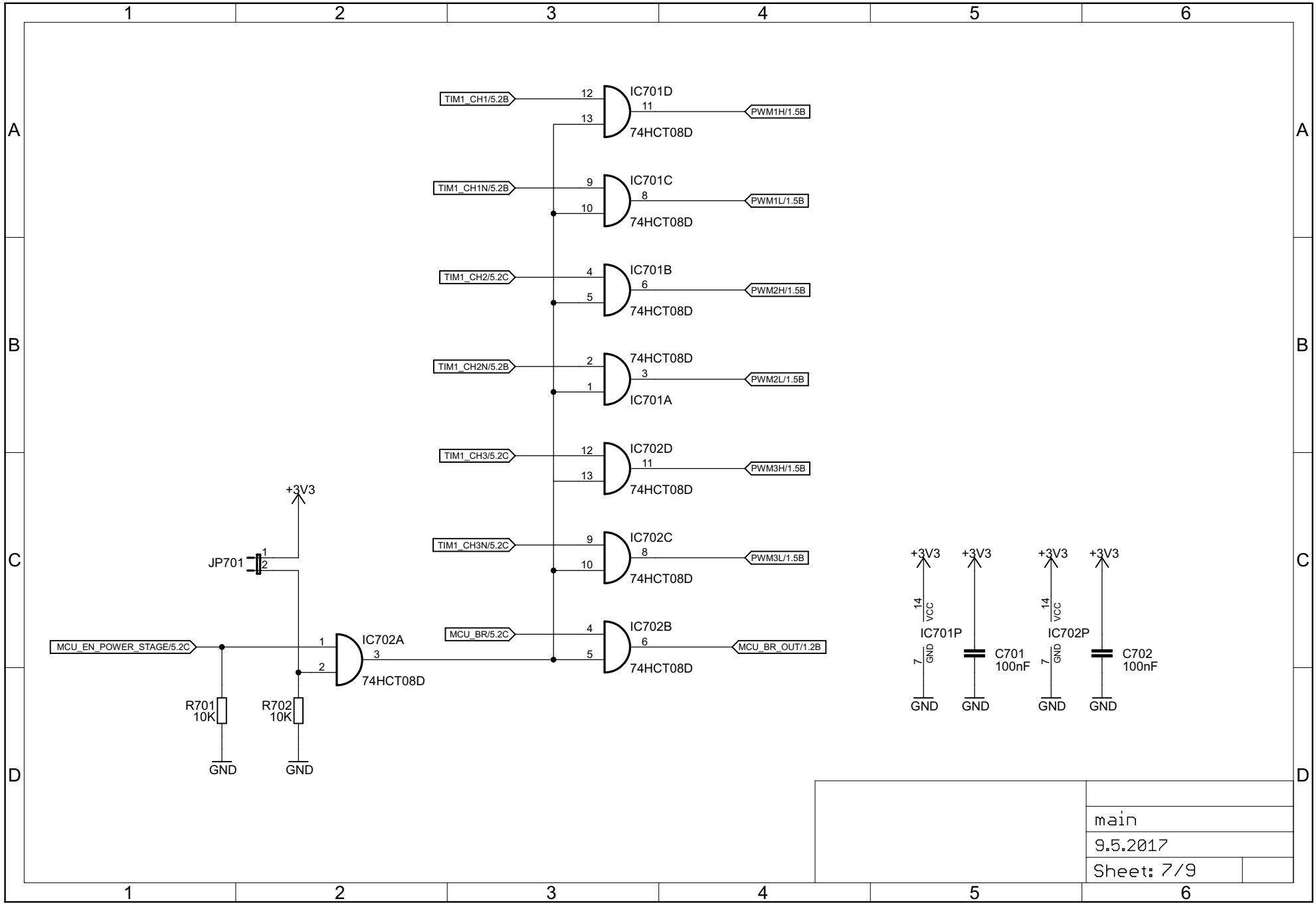
TIM1_CH1/5.2B
IC701D
74HCT08D
PWM1H/1.5B
TIM1_CH1N/5.2B
IC701C
74HCT08D
PWM1L/1.5B
TIM1_CH2/5.2C
IC701B
74HCT08D
PWM2H/1.5B
TIM1_CH2N/5.2B
74HCT08D
IC701A
PWM2L/1.5B
TIM1_CH3/5.2C
IC702D
74HCT08D
PWM3H/1.5B
TIM1_CH3N/5.2C
IC702C
74HCT08D
PWM3L/1.5B
MCU_BR/5.2C
IC702B
74HCT08D
MCU_BR_OUT/1.2B
+3V3
JP701
MCU_EN_POWER_STAGE/5.2C
IC702A
74HCT08D
R701
10K
R702
10K
GND
IC701P
IC702P
VCC
GND
C701
100nF
C702
100nF
main
9.5.2017
Sheet: 7/9

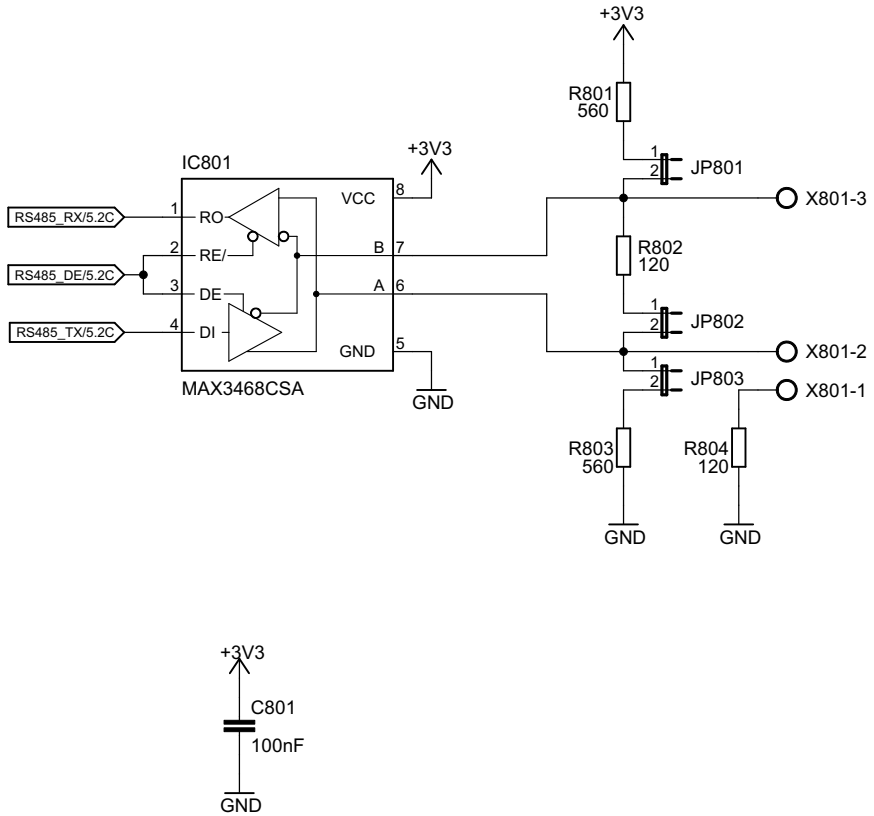

main

9.5.2017

Sheet: 8/9

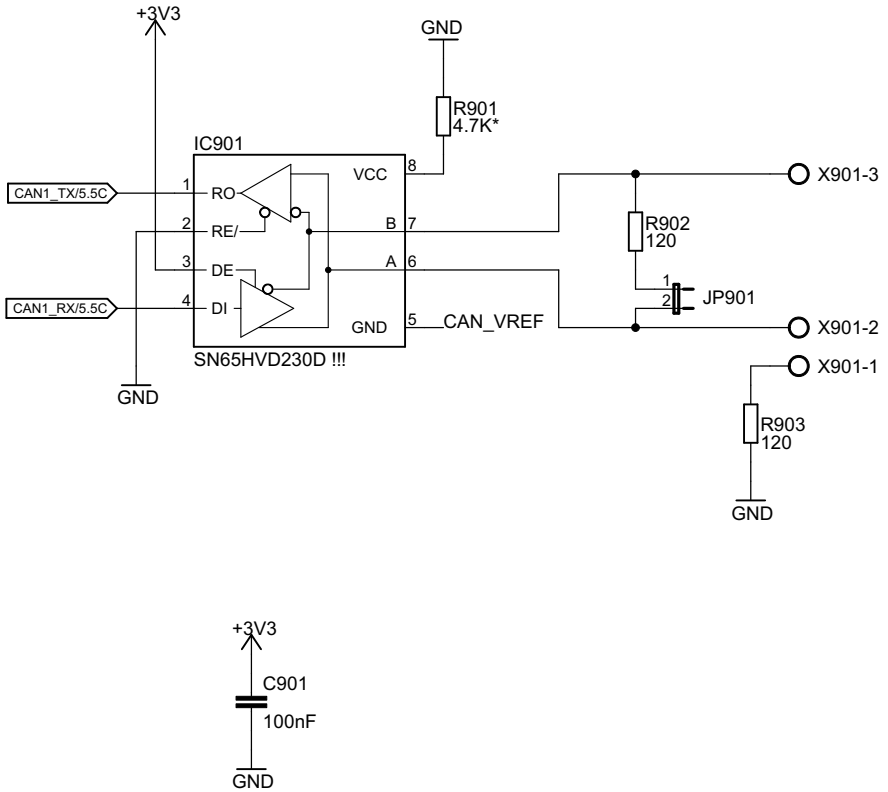

main

9.5.2017

Sheet: 9/9