CHAPTER XVII

Church, Turing, Tarski, and Others

Formal and Informal Systems

WE HAVE COME to the point where we can develop one of the main theses of this book: that every aspect of thinking can be viewed as a high-level description of a system which, on a low level, is governed by simple, even formal, rules. The "system", of course, is a brain-unless one is' speaking of thought processes flowing in another medium, such as a computer's circuits. The image is that of a formal system underlying an "informal system"-a system which can, for instance, make puns, discover number patterns, forget names, make awful blunders in chess, and so forth. This is what one sees from the outside: its informal, overt, software level. By contrast, it has a formal, hidden, hardware level (or "substrate") which is a formidably complex mechanism that makes transitions from state to state according to definite rules physically embodied in it, and according to the input of signals which impinge on it.

A vision of the brain such as this has many philosophical and other consequences, needless to say. I shall try to spell some of them out in this Chapter. Among other things, this vision seems to imply that, at bottom, the brain is some sort of a "mathematical" object. Actually, that is at best a very awkward way to look at the brain. The reason is that, even if a brain is, in a technical and abstract sense, some sort of formal system, it remains true that mathematicians only work with simple and elegant systems, systems in which everything is extremely clearly defined-and the brain is a far cry from that, with its ten billion or more semi-independent neurons, quasi-randomly connected up to each other. So mathematicians would never study a real brain's networks. And if you define "mathematics" as what mathematicians enjoy doing, then the properties of brains are not mathematical.

The only way to understand such a complex system as a brain is by chunking it on higher and higher levels, and thereby losing some precision at each step. What emerges at the top level is the "informal system" which obeys so many rules of such complexity that we do not yet have the vocabulary to think about it. And that is what Artificial Intelligence research is hoping to find. It has quite a different 'flavor from mathematics research. Nevertheless, there is a loose connection to mathematics: Al people often come from a strong mathematics background, and

mathematicians sometimes are intrigued by the workings of their own brains. The following passage, quoted from Stanislaw Ulam's autobiographical *Adventures of a Mathematician*, illustrates this point:

> It seems to me that more could be done to elicit ... the nature of associations, with computers providing the means for experimentation. Such a study would have to involve a gradation of notions, of symbols, of classes of symbols, of classes of classes, and so on, in the same way that the complexity of mathematical or physical structures is investigated.
>
> There must be a trick to the train of thought, a recursive formula. A group of neurons starts working automatically, sometimes without external impulse. It is a kind of iterative process with a growing pattern. It wanders about in the brain, and the way it happens must depend on the memory of similar patterns.'

Intuition and the Magnificent Crab

Artificial Intelligence is often referred to as "Al". Often, when I try to explain what is meant by the term, I say that the letters "AI" could just as well stand for "Artificial Intuition", or even "Artificial Imagery". The aim of Al is to get at what is happening when one's mind silently and invisibly chooses, from a myriad alternatives, which one makes most sense in a very complex situation. In many real-life situations, deductive reasoning is inappropriate, not because it would give wrong answers, but because there are too many correct but irrelevant statements which can be made; there are just too many things to take into account simultaneously for reasoning alone to be sufficient. Consider this mini-dialogue:

> "The other day I read in the paper that the--
>
> "Oh-you were reading? It follows that you have eyes. Or at least *one* eye. Or rather, that you had at least one eye *then*."

A sense of judgment-"What is important here, and what is not?"-is called for. Tied up with this is a sense of simplicity, a sense of beauty. Where do these intuitions come from? How can they emerge from an underlying formal system?

In the *Magnificrab*, some unusual powers of the Crab's mind are revealed. His own version of his powers is merely that he listens to music and distinguishes the *beautiful* from the *non-beautiful*. (Apparently for him there is a sharp dividing line.) Now Achilles finds another way to describe the Crab's abilities: the Crab divides statements of number theory into the categories true and false. But the Crab maintains that, if he chances to do so, it is only by the purest accident, for he is, by his own admission, incompetent in mathematics. What makes the Crab's performance all the more mystifying to Achilles, however, is that it seems to be in direct violation of a celebrated result of metamathematics with which Achilles is familiar:

CHURCH's THEOREM: There is no infallible method for telling theorems of TNT from nontheorems.

It was proven in 1936 by the American logician Alonzo Church. Closely related is what I call the

TARSKI-CHURCH-TURING THEOREM: There is no infallible method for telling true from false statements of number theory.

The Church-Turing Thesis

To understand Church's Theorem and the Tarski-Church-Turing Theorem better, we should first describe one of the ideas on which they are based; and that is the Church-Turing Thesis (often called "Church's Thesis"). For the Church-Turing Thesis is certainly one of the most important concepts in the philosophy of mathematics, brains, and thinking.

Actually, like tea, the Church-Turing Thesis can be given in a variety of different strengths. So I will present it in various versions, and we will consider what they imply. The first version sounds very innocent-in fact almost pointless:

> CHURCH-TURING THESIS, TAUTOLOGICAL VERSION: Mathematics problems can be solved only by doing mathematics.

Of course, its meaning resides in the meaning of its constituent terms. By "mathematics problem" I mean the problem of deciding whether some number possesses or does not possess a given arithmetical property. It turns out that by means of Godel-numbering and related coding tricks, almost any problem in any branch of mathematics can be put into this form, so that "mathematics problem" retains its ordinary meaning. What about "doing mathematics"? When one tries to ascertain whether a number has a property, there seem to be only a small number of operations which one uses in combination over and over again-addition, multiplication, checking for equality or inequality. That is, loops composed of such operations seem to be the only tool we have that allows us to probe the world of numbers. Note the word "seem". This is the critical word which the Church-Turing Thesis is about. We can give a revision:

> CHURCH-TURING THESIS, STANDARD VERSION: Suppose there is a method which a sentient being follows in order to sort numbers into two classes. Suppose further that this method always yields an answer within a finite amount of time, and that it always gives the same answer for a given number. Then: Some terminating FlooP program (i.e., some general recursive function) exists which gives exactly the same answers as the sentient being's method does.

The central hypothesis, to make it very clear, is that any mental process which divides numbers into two sorts can be described in the form of a FlooP program. The intuitive belief is that there are no other tools than those in FlooP, and that there are no ways to use those tools other than by

unlimited iterations (which FlooP allows). The Church-Turing Thesis is not a provable fact in the sense of a Theorem of mathematics-it is a hypothesis about the processes which human brains use.

The Public-Processes Version

Now some people might feel that this version asserts too much. These people might put their objections as follows: "Someone such as the Crab might exist-someone with an almost mystical insight into mathematics, but who is just as much in the dark about his own peculiar abilities as anyone else-and perhaps that person's mental mechanisms carry out operations which have no counterpart in FlooP." The idea is that perhaps we have a subconscious potential for doing things which transcend the conscious processes-things which are somehow inexpressible in terms of the elementary FlooP operations. For these objectors, we shall give a weaker version of the Thesis, one which distinguishes between public and private mental processes:

> CHURCH-TURING THESIS, PUBLIC-PROCESSES VERSION: Suppose there is a method which a sentient being follows in order to sort numbers into two classes. Suppose further that this method always yields an answer within a finite amount of time, and that it always gives the same answer for a given number. Proviso. Suppose also that this method can be communicated reliably from one sentient being to another by means of language. Then: Some terminating FlooP program (i.e., general recursive function) exists which gives exactly the same answers as the sentient beings' method does.

This says that public methods are subject to "FlooPification", but asserts nothing about private methods. It does not say that they are un-FlooP-able, but it at least leaves the door open.

Srinivasa Ramanujan

As evidence against any stronger version of the Church-Turing Thesis, let us consider the case of the famous Indian mathematician of the first quarter of the twentieth century, Srinivasa Ramanujan (1887-1920). Ramanujan (Fig. 105) came from Tamilnadu, the southernmost part of India, and studied mathematics a little in high school. One day, someone who recognized Ramanujan's talent for math presented him with a copy of a slightly out-of-date textbook on analysis, which Ramanujan devoured (figuratively speaking). He then began making his own forays into the world of analysis, and by the time he was twenty-three, he had made a number of discoveries which he considered worthwhile. He did not know to whom to turn, but somehow was told about a professor of mathematics in faraway England, named G. H. Hardy. Ramanujan compiled his best

FIGURE 105. Srinivasa Ramanujan and one of his strange Indian melodies.

$$\cfrac{1}{1+\cfrac{e^{-2\pi\sqrt{5}}}{1+\cfrac{e^{-4\pi\sqrt{5}}}{1+\cfrac{e^{-6\pi\sqrt{5}}}{1+\ddots}}}} = \left(\frac{\sqrt{5}}{1+\sqrt[5]{5^{3/4}\left(\frac{\sqrt{5}-1}{2}\right)^{5/2}-1}} - \frac{\sqrt{5}+1}{2}\right)e^{2\pi/\sqrt{5}}$$

results together in a packet of papers, and sent them all to the, unforewarned Hardy with a covering letter which friends helped him express
in English. Below are some excerpts taken from Hardy's description of his reaction upon receiving the bundle:

> ... It soon became obvious that Ramanujan must possess much more general theorems and was keeping a great deal up his sleeve.... [Some formulae]defeated me completely; I had never seen anything in the least like them before. A single look at them is enough to show that they could only be written down by a mathematician of the highest class. They must be true because, if they were not true, no one would have had the imagination to invent them. Finally ... the writer must be completely honest, because great mathematicians are commoner than thieves or humbugs of such incredible skill[2]

What resulted from this correspondence was that Ramanujan came to England in 1913, sponsored by Hardy; and then followed an intense collaboration which terminated in Ramanujan's early demise at age thin thirty-three from tuberculosis.

Ramanujan had several extraordinary characteristics which set him apart from the majority of mathematicians. One was his lack of rigor. Very often he would simply state a result which, he would insist, had just come to

him from a vague intuitive source, far out of the realm of conscious probing. In fact, he often said that the goddess Namagiri inspired him in his dreams. This happened time and again, and what made it all the more mystifying-perhaps even imbuing it with a certain mystical quality-was the fact that many of his "intuition-theorems" were wrong. Now there is a curious paradoxical effect where sometimes an event which you think could not help but make credulous people become a little more skeptical, actually has the reverse effect, hitting the credulous ones in some vulnerable spot of their minds, tantalizing them with the hint of some baffling irrational side of human nature. Such was the case with Ramanujan's blunders: many educated people with a yearning to believe in something of the sort considered Ramanujan's intuitive powers to be evidence of a mystical insight into Truth, and the fact of his fallibility seemed, if anything, to strengthen, rather than weaken, such beliefs.

Of course it didn't hurt that he was from one of the most backward parts of India, where fakirism and other eerie Indian rites had been practiced for millennia, and were still practiced with a frequency probably exceeding that of the teaching of higher mathematics. And his occasional wrong flashes of insight, instead of suggesting to people that he was merely human, paradoxically inspired the idea that Ramanujan's wrongness always had some sort of "deeper rightness" to it-an "Oriental" rightness, perhaps touching upon truths inaccessible to Western minds. What a delicious, almost irresistible thought! Even Hardy-who would have been the first to deny that Ramanujan had any mystical powers-once wrote about one of Ramanujan's failures, "And yet I am not sure that, in some ways, his failure was not more wonderful than any of his triumphs."

The other outstanding feature of Ramanujan's mathematical personality was his "friendship with the integers", as his colleague Littlewood put it. This is a characteristic that a fair number of mathematicians share to some degree or other, but which Ramanujan possessed to an extreme. There are a couple of anecdotes which illustrate this special power. The first one is related by Hardy:

> I remember once going to see him when he was lying ill at Putney. I had ridden in taxi-cab No. 1729, and remarked that the number seemed to me rather a dull one, and that I hoped it was not an unfavorable omen. "No," he replied, "it is a very interesting number; it is the smallest number expressible as a sum of two cubes in two different ways." .1 asked him, naturally, whether he knew the answer to the corresponding problem for fourth powers; and he replied, after a moment's thought, that he could see no obvious example, and thought that the first such number must be very large.'

It turns out that the answer for fourth powers is:

$$635318657 = 134 + 1334 = 1584 + 594$$

The reader may find it interesting to tackle the analogous problem for squares, which is much easier.

It is actually quite interesting to ponder why it is that Hardy im-

mediately jumped to fourth powers. After all, there are several other reasonably natural generalizations of the equation

$$u^3 + v^3 = x^3 + y^3$$

along different dimensions. For instance, there is the question about representing a number in three distinct ways as a sum of two cubes:

$$r^3 + {}^3 = u^3 + v^3 = x^3 + y^3$$

Or, one can use three different cubes:

$$^{u3} + {}^{v3} + w^3 = x^3 + y^3 + z^3,$$

Or one can even make a Grand Generalization in all dimensions at once:

$$r^4 + s^4 + t^4 = u^4 + v^4 + w^4 = x^4 + v^4 + z^4$$

There is a sense, however, in which Hardy's generalization is "the most mathematician-like". Could this sense of mathematical esthetics ever be programmed?

The other anecdote is taken from a biography of Ramanujan by his countryman S. R. Ranganathan, where it is called "Ramanujan's Flash". It is related by a Indian friend of Ramanujan's from his Cambridge days, Dr. P. C. Mahalanobis.

> On another occasion, I went to his room to have lunch with him. The First World War had started some time earlier. I had in my hand a copy of the monthly "Strand Magazine" which at that time used to publish a number of puzzles to be solved by readers. Ramanujan was stirring something in a pan over the fire for our lunch. I was sitting near the table, turning over the pages of the Magazine. I got interested in a problem involving a relation between two numbers. I have forgotten the details; but I remember the type of the problem. Two British officers had been billeted in Paris in two different houses in a long street; the door numbers of these houses were related in a special way; the problem was to find out the two numbers. It was not at all difficult. I got the solution in a few minutes by trial and error.
>
> MAHALANOBIS (in a joking way): Now here is a problem for you.
> RAMANUJAN: What problem, tell me.'(He went on stirring the pan.) I read out the question from the "Strand Magazine".
> RAMANUJAN: Please take down the solution. (He dictated a continued fraction.)
> The first term was the solution which I had obtained. Each successive term represented successive solutions for the same type of relation between two numbers, as the number of houses in the street would increase indefinitely. I was amazed.
> MAHALANOBIS: Did you get the solution in a flash?
> RAMANUJAN: Immediately I heard the problem, it was clear that the Solution was obviously a continued fraction; I then thought, "Which continued fraction?" and the answer came to my mind. It was just as simple as this.'

Hardy, as Ramanujan's closest co-worker, was often asked after

Ramanujan's death if there had been any occult or otherwise exotically flavored elements to Ramanujan's thinking style. Here is one comment which he gave:

> I have often been asked whether Ramanujan had any special secret; whether his methods differed in kind from those of other mathematicians; whether there was anything really abnormal in his mode of thought. I cannot answer these questions with any confidence or conviction; but I do not believe it. My belief is that all mathematicians think, at bottom, in the same kind of way, and that Ramanujan was no exception .[5]

Here Hardy states in essence his own version of the Church-Turing Thesis. I paraphrase:
CHURCH-TURING THESIS, HARDY'S VERSION: At bottom, all mathematicians are isomorphic.

This does not equate the mathematical potential of mathematicians with that of general recursive functions; for that, however, all you need is to show that some mathematician's mental capacity is no more general than recursive functions. Then, if you believe Hardy's Version, you know it for all mathematicians.
Then Hardy compares Ramanujan with calculating prodigies:

> His memory, and his powers of calculation, were very unusual, but they could not reasonably be called "abnormal". If he had to multiply two large numbers, he multiplied them in the ordinary way; he could do it with unusual rapidity and accuracy, but not more rapidly and accurately than any mathematician who is naturally quick and has the habit of computations

Hardy describes what he perceived as Ramanujan's outstanding intellectual attributes:

> With his memory, his patience, and his power of calculation, he combined a *power of generalisation, a feeling for form, and a capacity for rapid modification of his hypotheses*, that were often really startling, and made him, in his own field, without a rival in his day.'

The part of this passage which I have italicized seems to me to be an excellent characterization of some of the subtlest features of intelligence in general. Finally, Hardy concludes somewhat nostalgically:

> [His work has not the simplicity and inevitableness of the very greatest work; it would be greater if it were less strange. One gift it has which no one can deny-profound and invincible originality. He would probably have been a greater mathematician if he had been caught and tamed a little in his youth; he would have discovered more that was new, and that, no doubt, of greater importance. On the other hand he would have been less of a Ramanujan, and more of a European professor and the loss might have been greater than the gain.[8]

The esteem in which Hardy held Ramanujan is revealed by the romantic way in which he speaks of him.

"Idiots 'Savants"

There is another class of people whose mathematical abilities seem to defy rational explanation-the so-called "idiots savants", who can perform complex calculations at lightning speeds in their heads (or wherever they do it). Johann Martin Zacharias Dase, who lived from 1824 to 1861 and was employed by various European governments to perform computations, is an outstanding example. He not only could multiply two numbers each of 100 digits in his head; he also had an uncanny sense of quantity. That is, he could just "tell", without counting, how many sheep were in a field, or words in a sentence, and so forth, up to about 30-this in contrast to most of us, who have such a sense up to about 6, with reliability. Incidentally, Dase was not an idiot.

I shall not describe the many fascinating documented cases of "lightning calculators", for that is not my purpose here. But I do feel it is important to dispel the idea that they do it by some mysterious, unanalyzable method. Although it is often the case that such wizards' calculational abilities far exceed their abilities to explain their results, every once in a while, a person with other intellectual gifts comes along who also has this spectacular ability with numbers. From such people's introspection, as well as from extensive research by psychologists, it has been ascertained that nothing occult takes place during the performances of lightning calculators, but simply that their minds race through intermediate steps with the kind of self-confidence that a natural athlete has in executing a complicated motion quickly and gracefully. They do not reach their answers by some sort of instantaneous flash of enlightenment (though subjectively it may feel that way to some of them), but-like the rest of us-by sequential calculation, which is to say, by FlooP-ing (or BlooP-ing) along. -

Incidentally, one of the most obvious clues that no "hot line to God" is involved is the mere fact that when the numbers involved get bigger, the answers are slower in coming. Presumably, if God or an "oracle" were supplying the answers, he wouldn't have to slow up when the numbers got bigger. One could probably make a nice plot showing how the time taken by a lightning calculator varies with the sizes of the numbers involved, and the operations involved, and from it deduce some features of the algorithms employed.

The Isomorphism Version of the Church-Turing Thesis

This finally brings us to a strengthened standard version of the Church-Turing Thesis:

> CHURCH-TURING THESIS, ISOMORPHISM VERSION: Suppose there is a method which a sentient being follows in order to sort numbers into two classes. Suppose further that this method always yields an answer within a finite amount of time, and that it always gives the same answer for a given number. Then: Some terminating FlooP program (i.e.,

> general recursive function) exists which gives exactly the same answers as the sentient being's method does. Moreover: The mental process and the FlooP program are isomorphic in the sense that on some level there is a correspondence between the steps being carried out in both computer and brain.

Notice that not only has the conclusion been strengthened, but also the proviso of communicability of the faint-hearted Public-Processes Version has been dropped. This bold version is the one which we now shall discuss.

In brief, this version asserts that when one computes something, one's mental activity can be mirrored isomorphically in some FlooP program. And let it be very clear that this does not mean that the brain is actually running a FlooP program, written in the FlooP language complete with **BEGIN's**, **END's**, **ABORT's**, and the rest-not at all. It is just that the steps are taken in the same order as they could be in a FlooP program, and the logical structure of the calculation can be mirrored in a FlooP program.

Now in order to make sense of this idea, we shall have to make some level distinctions in both computer and brain, for otherwise it could be misinterpreted as utter nonsense. Presumably the steps of the calculation going on inside a person's head are on the highest level, and are supported by lower levels, and eventually by hardware. So if we speak of an isomorphism, it means we've tacitly made the assumption that the highest level can be isolated, allowing us to discuss what goes on there independently of other levels, and then to map that top level into FlooP. To be more precise, the assumption is that there exist software entities which play the roles of various mathematical constructs, and which are activated in ways which can be mirrored exactly inside FlooP (see Fig. 106). What enables these software entities to come into existence is the entire infrastructure discussed in Chapters XI and XI I, as well as in the Prelude, Ant Fugue. There is no assertion of isomorphic activity on the lower levels of brain and computer (e.g., neurons and bits).

The spirit of the Isomorphism Version, if not the letter, is gotten across by saying that what an idiot savant does in calculating, say, the logarithm of 7r, is isomorphic to what a pocket calculator does in calculating it-where the isomorphism holds on the arithmetic-step level, not on the lower levels of, in the one case, neurons, and in the other, integrated circuits. (Of course different routes can be followed in calculating anything-but presumably the pocket calculator, if not the human, could be instructed to calculate the answer in any specific manner.)

FIGURE 106. *The behavior of natural numbers can be mirrored in a human brain or in the programs of a computer. These two different representations can then be mapped onto each other on an appropriately abstract level.*

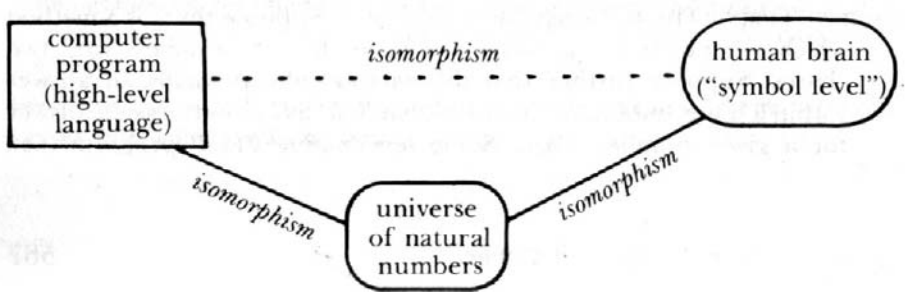

Representation of Knowledge about the Real World

Now this seems quite plausible when the domain referred to is number theory, for there the total universe in which things happen is very small and clean. Its boundaries and residents and rules are well-defined, as in a hard-edged maze. Such a world is far less complicated than the open-ended and ill-defined world which we inhabit. A number theory problem, once stated, is complete in and of itself. A real-world problem, on the other hand, never is sealed off from any part of the world with absolute certainty. For instance, the task of replacing a burnt-out light bulb may turn out to require moving a garbage bag; this may unexpectedly cause the spilling of a box of pills, which then forces the floor to be swept so that the pet dog won't eat any of the spilled pills, etc., etc. The pills and the garbage and the dog and the light bulb are all quite distantly related parts of the world-yet an intimate connection is created by some everyday happenings. And there is no telling what else could be brought in by some other small variations on the expected. By contrast, if you are given a number theory problem, you never wind up having to consider extraneous things such as pills or dogs or bags of garbage or brooms in order to solve your problem. (Of course, your intuitive knowledge of such objects may serve you in good stead as you go about unconsciously trying to manufacture mental images to help you in visualizing the problem in geometrical terms-but that is another matter.)

Because of the complexity of the world, it is hard to imagine a little pocket calculator that can answer questions put to it when you press a few buttons bearing labels such as "dog", "garbage", "light bulb", and so forth. In fact, so far it has proven to be extremely complicated to have a full-size high-speed computer answer questions about what appear to us to be rather simple subdomains of the real world. It seems that a large amount of knowledge has to be taken into account in a highly integrated way for "understanding" to take place. We can liken real-world thought processes to a tree whose visible part stands sturdily above ground but depends vitally on its invisible roots which extend way below ground, giving it stability and nourishment. In this case the roots symbolize complex processes which take place below the conscious level of the mind-processes whose effects permeate the way we think but of which we are unaware. These are the "triggering patterns of symbols" which were discussed in Chapters XI and XII.

Real-world thinking is quite different from what happens when we do a multiplication of two numbers, where everything is "above ground", so to speak, open to inspection. In arithmetic, the top level can be "skimmed off " and implemented equally well in many different sorts of hardware: mechanical adding machines, pocket calculators, large computers, people's brains, and so forth. This is what the Church-Turing Thesis is all about. But when it comes to real-world understanding, it seems that there is no simple way to skim off the top level, and program it. alone. The triggering patterns of symbols are just too complex. There must he several levels through which thoughts may "percolate" and "bubble".

In particular-and this comes back to a major theme of Chapters XI ' and XII-the representation of the real world in the brain, although rooted in isomorphism to some extent, involves some elements which have no counterparts at all in the outer world. That is, there is much more to it than simple mental structures representing "dog", "broom", etc. All of these symbols exist, to be sure-but their internal structures are extremely complex and to a large degree are unavailable for conscious inspection. Moreover, one would hunt in vain to map each aspect of a symbol's internal structure onto some specific feature of the real world.

Processes That Are Not So Skimmable

For this reason, the brain begins to look like a very peculiar formal system, for on its bottom level-the neural level-where the "rules" operate and change the state, there may be no interpretation of the primitive elements (neural firings, or perhaps even lower-level events). Yet on the top level, there emerges a meaningful interpretation-a mapping from the large "clouds" of neural activity which we have been calling "symbols", onto the real world. There is some resemblance to the Gödel construction, in that a high-level isomorphism allows a high level of meaning to be read into strings; but in the Gödel construction, the higher-level meaning "rides" on the lower level-that is, it is derived from the lower level, once the notion of Gödel-numbering has been introduced. But in the brain, the events on the neural level are not subject to real-world interpretation; they are simply not imitating anything. They are there purely as the substrate to support the higher level, much as transistors in a pocket calculator are there purely to support its number-mirroring activity. And the implication is that there is no way to skim off just the highest level and make an isomorphic copy in a program; if one is to mirror the brain processes which allow real-world understanding, then one must mirror some of the lower-level things which are taking place: the "languages of the brain". This doesn't necessarily mean that one must go all the way down to the level of the hardware, though that may turn out to be the case.

In the course of developing a program with the aim of achieving an "intelligent" (viz., human-like) internal representation of what is "out there", at some point one will probably be forced into using structures and processes which do not admit of any straightforward interpretations-that is, which cannot be directly mapped onto elements of reality. These lower layers of the program will be able to be understood only by virtue of their catalytic relation to layers above them, rather than because of some direct connection they have to the outer world. (A concrete image of this idea was suggested by the Anteater in the Ant Fugue: the "indescribably boring nightmare" of trying to understand a book on the letter level.)

Personally, I would guess that such multilevel architecture of concept-handling systems becomes necessary just when processes involving images and analogies become significant elements of the program-in

contrast to processes which are supposed to carry out strictly deductive reasoning. Processes which carry out deductive reasoning can be programmed in essentially one single level, and are therefore skimmable, by definition. According to my hypothesis, then, imagery and analogical thought processes intrinsically require several layers of substrate and are therefore intrinsically non-skimmable. I believe furthermore that it is precisely at this same point that creativity starts to emerge-which would imply that creativity intrinsically depends upon certain kinds of "uninterpretable" lower-level events. The layers of underpinning of analogical thinking are, of course, of extreme interest, and. some speculations on their nature will be offered in the next two Chapters.

Articles of Reductionistic Faith

One way to think about the relation between higher and lower levels in the brain is this. One could assemble a neural net which, on a local (neuron-to-neuron) level, performed in a manner indistinguishable from a neural net in a brain, but which had no higher-level meaning at all. The fact that the lower level is composed of interacting neurons does not necessarily force any higher level of meaning to appear-no more than the fact that alphabet soup contains letters forces meaningful sentences to be found, swimming about in the bowl. High-level meaning is an optional feature of a neural network-one which may emerge as a consequence of evolutionary environmental pressures.

Figure 107 is a diagram illustrating the fact that emergence of a higher level of meaning is optional. The upwards-pointing arrow indicates that a substrate can occur without a higher level of meaning, but not vice versa: the higher level must be derived from properties of a lower one.

FIGURE 107. *Floating on neural activity, the symbol level of the brain mirrors the world. But neural activity per se, which can be simulated on a computer, does not create thought; that calls for higher levels of organization.*

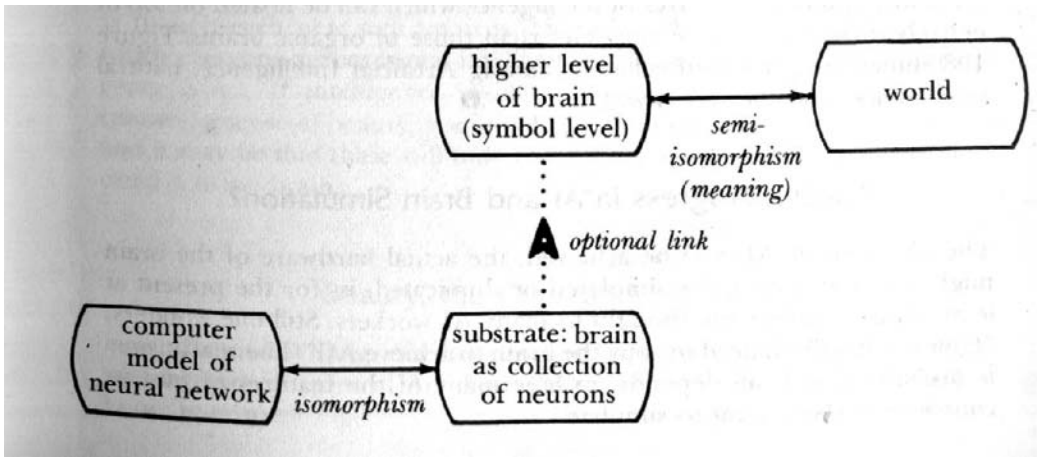

The diagram includes an indication of a computer simulation of a neural network. This is in principle feasible, no matter how complicated the network, provided that the behavior of individual neurons can be described in terms of computations which a computer can carry out. This is a subtle postulate which few people even think of questioning. Nevertheless it is a piece of "reductionistic faith"; it could be considered a "microscopic version" of the Church-Turing Thesis. Below we state it explicitly:

> CHURCH-TURING THESIS, MICROSCOPIC VERSION: The behavior of the components of a living being can be simulated on a computer. That is, the behavior of any component (typically assumed to be a cell) can be calculated by a FlooP program (i.e., general recursive function) to any desired degree of accuracy, given a sufficiently precise description of the component's internal state and local environment.

This version of the Church-Turing Thesis says that brain processes do not possess any more mystique-even though they possess more levels of organization-than, say, stomach processes. It would be unthinkable in this day and age to suggest that people digest their food, not by ordinary chemical processes, but by a sort of mysterious and magic "assimilation". This version of the CT-Thesis simply extends this kind of commonsense reasoning to brain processes. In short, it amounts to faith that the brain operates in a way which is, in principle, understandable. It is a piece of reductionist faith.

A corollary to the Microscopic CT-Thesis is this rather terse new macroscopic version:

> CHURCH-TURING THESIS, REDUCTIONIST'S VERSION: All brain processes are derived from a computable substrate.

This statement is about the strongest theoretical underpinning one could give in support of the eventual possibility of realizing Artificial Intelligence.

Of course, Artificial Intelligence research is not aimed at simulating neural networks, for it is based on another kind of faith: that probably there are significant features of intelligence which can be floated on top of entirely different sorts of substrates than those of organic brains. Figure 108 shows the presumed relations among Artificial Intelligence, natural intelligence, and the real world.

Parallel Progress in Al and Brain Simulation?

The idea that, if Al is to be achieved, the actual hardware of the brain might one day have to be simulated or duplicated, is, for the present at least, quite an abhorrent thought to many Al workers. Still one wonders, "How finely will we need to copy the brain to achieve Al?" The real answer is probably that it all depends on how many of the features of human consciousness you want to simulate.

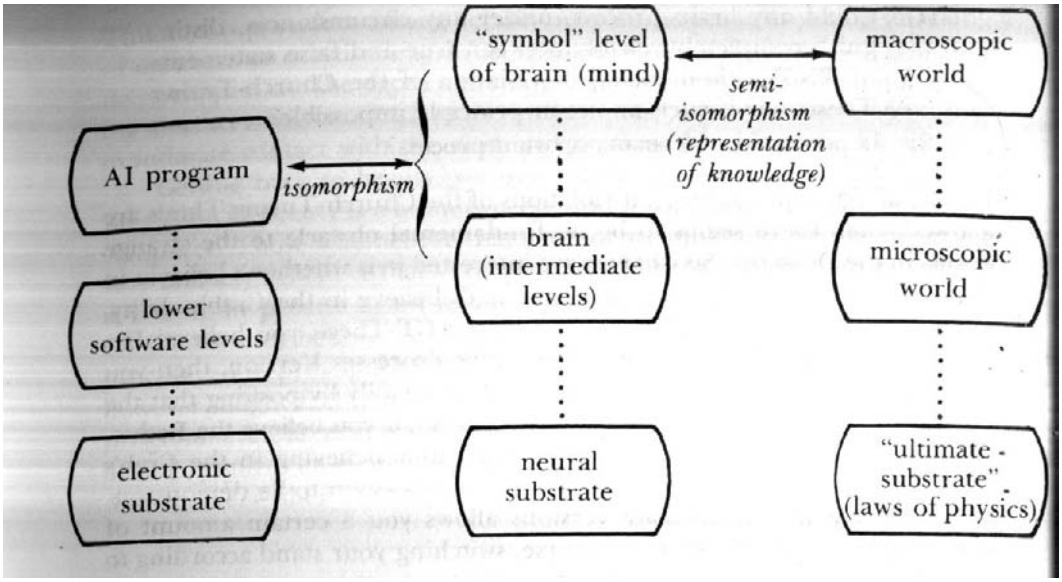

FIGURE 108. *Crucial to the endeavor of Artificial Intelligence research is the notion that the symbolic levels of the mind can be "skimmed off " of their neural substrate and implemented in other media, such as the electronic substrate of computers. To what depth the copying of brain must go is at present completely unclear.*

Is an ability to play checkers well a sufficient indicator of intelligence? If so, then Al already exists, since checker-playing programs are of world class. Or is intelligence an ability to integrate functions symbolically, as in a freshman calculus class? If so, then AI already exists, since symbolic integration routines outdo the best people in most cases. Or is intelligence the ability to play chess well? If so, then AI is well on its way, since chess-playing programs can defeat most good amateurs; and the level of artificial chess will probably continue to improve slowly.

Historically, people have been naive about what qualities, if mechanized, would undeniably constitute intelligence. Sometimes it seems as though each new step towards Al, rather than producing something which everyone agrees is real intelligence, merely reveals what real intelligence is not. If intelligence involves learning, creativity, emotional responses, a sense of beauty, a sense of self, then there is a long road ahead, and it may be that these will only be realized when we have totally duplicated a living brain.

Beauty, the Crab, and the Soul

Now what, if anything, does all this have to say about the Crab's virtuoso performance in front of Achilles? There are two issues clouded together here. They are:

(1) Could any brain process, under any circumstances, distinguish completely reliably between true and false statements of TNT without being in violation of the Church-Turing Thesis-or is such an act in principle impossible?
(2) Is perception of beauty a brain process?

First of all, in response to (1), if violations of the Church-Turing Thesis are allowed, then there seems to be no fundamental obstacle to the strange events in the Dialogue. So what we are interested in is whether a believer in the Church-Turing Thesis would have to disbelieve in the Crab's ability. Well, it all depends on which version of the CT-Thesis you believe. For example, if you only subscribe to the Public-Processes Version, then you could reconcile the Crab's behavior with it very easily by positing that the Crab's ability is not communicable. Contrariwise, if you believe the Reductionist's Version, you will have a very hard time believing in the Crab's ostensible ability (because of Church's Theorem-soon to be demonstrated). Believing in intermediate versions allows you a certain amount of wishy-washiness on the issue. Of course, switching your stand according to convenience allows you to waffle even more.

It seems appropriate to present a new version of the CT-Thesis, one which is tacitly held by vast numbers of people, and which has been publicly put forth by several authors, in various manners. Some of the more famous ones are: philosophers Hubert Dreyfus, S. Jaki, Mortimer Taube, and J. R. Lucas; the biologist and philosopher Michael Polanyi (a holist par excellence); the distinguished Australian neurophysiologist John Eccles. I am sure there are many other authors who have expressed similar ideas, and countless readers who are sympathetic. I have attempted below to summarize their joint position. I have probably not done full justice to it, but I have tried to convey the flavor as accurately as I can:

CHURCH-TURING THESIS, SOULISTS' VERSION: Some kinds of things which a brain can do can be vaguely approximated on a computer but not most, and certainly not the interesting ones. But anyway, even if they all could, that would still leave the soul to explain, and there is no way that computers have any bearing on that.

This version relates to the tale of the Magnificrab in two ways. In the first place, its adherents would probably consider the tale to be silly and implausible, but-not forbidden in principle. In the second place, they would probably claim that appreciation of qualities such as beauty is one of those properties associated with the elusive soul, and is therefore inherently possible only for humans, not for mere machines.

We will come back to this second point in a moment; but first, while we are on the subject of "soulists", we ought to exhibit this latest version in an even more extreme form, since that is the form to which large numbers of well-educated people subscribe these days:

CHURCH-TURING THESIS, THEODORE ROSZAK VERSION: Computers are ridiculous. So is science in general.

This view is prevalent among certain people who see in anything smacking of numbers or exactitude a threat to human values. It is too bad that they do not appreciate the depth and complexity and beauty involved in exploring abstract structures such as the human mind, where, indeed, one comes in intimate contact with the ultimate questions of what to be human is.

Getting back to beauty, we were about to consider whether the appreciation of beauty is a brain process, and if so, whether it is imitable by a computer. Those who believe that it is not accounted for by the brain are very unlikely to believe that a computer could possess it. Those who believe it is a brain process again divide up according to which version of the CT-Thesis they believe. A total reductionist would believe that any brain process can in principle be transformed into a computer program; others, however, might feel that beauty is too ill-defined a notion for a computer program ever to assimilate. Perhaps they feel that the appreciation of beauty requires an element of irrationality, and therefore is incompatible with the very fiber of computers.

Irrational and Rational Can Coexist on Different Levels

> However, this notion that "irrationality is incompatible with computers" rests on a severe confusion of levels. The mistaken notion stems from the idea that since computers are faultlessly functioning machines, they are therefore bound to be "logical" on all levels. Yet it is perfectly obvious that a computer can be instructed to print out a sequence of illogical statements-or, for variety's sake, a batch of statements having random truth values. Yet in following such instructions, a computer would not be making any mistakes! On the contrary, it would only be a mistake if the computer printed out something other than the statements it had been instructed to print. This illustrates how faultless functioning on one level may underlie symbol manipulation on a higher level-and the goals of the higher level may be completely unrelated to the propagation of Truth.

Another way to gain perspective on this is to remember that a brain, too, is a collection of faultlessly functioning elements-neurons. Whenever a neuron's threshold is surpassed by the sum of the incoming signals, BANG!-it fires. It never happens that a neuron forgets its arithmetical knowledge-carelessly adding its inputs and getting a wrong answer. Even when a neuron dies, it continues to function correctly, in the sense that its components continue to obey the laws of mathematics and physics. Yet as we all know, neurons are perfectly capable of supporting high-level behavior that is wrong, on its own level, in the most amazing ways. Figure 109 is meant to illustrate such a clash of levels: an incorrect belief held in the software of a mind, supported by the hardware of a faultlessly functioning brain.

The point-a point which has been made several times earlier in various contexts-is simply that meaning can exist on two or more different levels of a symbol-handling system, and along with meaning, rightness and wrongness can exist on all those levels. The presence of meaning on a given

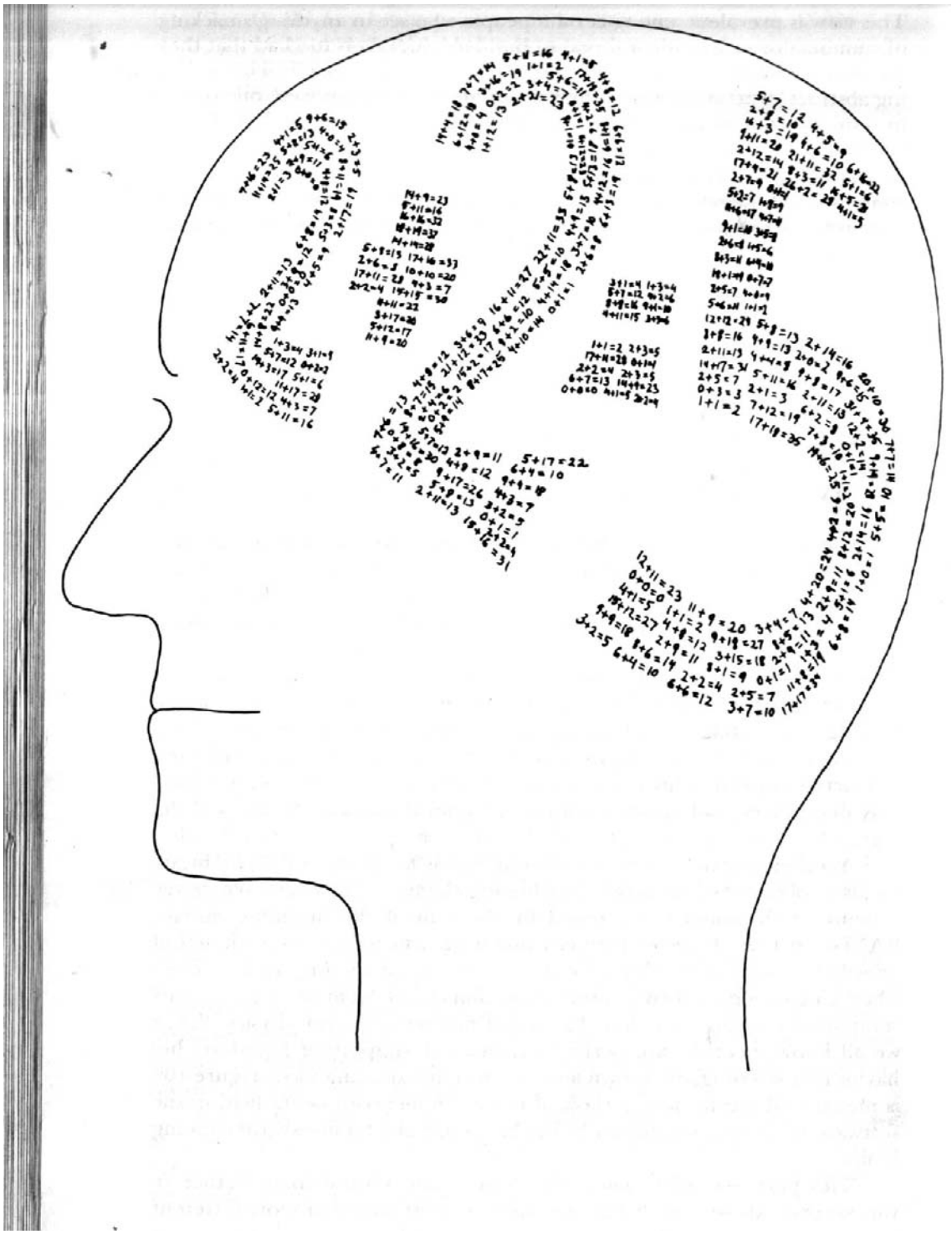

FIGURE 109. *The brain is rational; the mind may not be. [Drawing by the author.]*

level is determined by whether or- not reality is mirrored in an isomorphic (or looser) fashion on that level. So the fact that neurons always perform correct additions (in fact, much more complex calculations) has no bearing whatsoever on the correctness of the top-level conclusions supported by their machinery. Whether one's top level is engaged in proving koans of Boolean Buddhism or in meditating on theorems of Zer1 Algebra, one's neurons are functioning rationally. By the same token, the high-level symbolic processes which in a brain create the experience of appreciating beauty are perfectly rational on the bottom level, where the faultless functioning is taking place; any irrationality, if there is such, is on the higher level, and is an epiphenomenon-a consequence-of the events on the lower level.

To make the same point in a different way, let us say you are having a hard time making up your mind whether to order a cheeseburger or a pineappleburger. Does this imply that your neurons are also balking, having difficulty deciding whether or not to fire? Of course not. Your hamburger-confusion is a high-level state which fully depends on the efficient firing of thousands of neurons in very organized ways. This is a little ironic, yet it is perfectly obvious when you think about it. Nevertheless, it is probably fair to say that nearly all confusions about minds and computers have their origin in just such elementary level-confusions.

There is no reason to believe that a. computer's faultlessly functioning hardware could not support high-level symbolic behavior which would represent such complex states as confusion, forgetting, or appreciation of beauty. It would require that there exist massive subsystems interacting with each other according to a complex "logic". The overt behavior could appear either rational or irrational; but underneath it would be the performance of reliable, logical hardware.

More Against Lucas

Incidentally, this kind of level distinction provides us with some new fuel in arguing against Lucas. The Lucas argument is based on the idea that Gödel's Theorem is applicable, by definition, to machines. In fact, Lucas makes a most emphatic pronunciation:

> Gödel's theorem must apply to cybernetical machines, because it is of the essence of being a machine, that it should be a concrete instantiation of a formal system.°

This is, as we have seen, true on the hardware level-but since there may be higher levels, it is not the last word on the subject. Now Lucas gives the impression that in the mind-imitating machines he discusses, there is only one level on which manipulation of symbols takes place. For instance, the Rule of Detachment (called "Modus Ponens" in his article) would be wired into the hardware and would be an unchangeable feature of such a machine. He goes further and intimates that if Modus Ponens were not an

immutable pillar of the machine's system, but could be overridden on occasion, then:

> The system will have ceased to be a formal logical system. and the machine will barely qualify for the title of a model for the mind.[10]

Now many programs which are being developed in At research have very little in common with programs for generating truths of number theory--programs with inflexible rules of inference and fixed sets of axioms. Yet they are certainly intended as "models for the mind". On their top level the "informal" level-there may be manipulation of images, formulation of analogies, forgetting of ideas, confusing of concepts, blurring of distinctions, and so forth. But this does not contradict the fact that they rely on the correct functioning of their underlying hardware as much as brains rely on the correct functioning of their neurons. So At programs are still "concrete instantiations of formal systems"-but they are not machines to which Lucas' transmogrification of Gödel's proof can be applied. Lucas' argument applies merely to their bottom level, on which their intelligence-however great or small it may be-does not lie.

There is one other way in which Lucas betrays his oversimplified vision of how mental processes would have to be represented inside computer programs. In discussing the matter of consistency, he writes

> If we really were inconsistent machines, we should remain content with our inconsistencies, and would happily affirm both halves of a contradiction. Moreover, we would be prepared to say absolutely anything-which we are not. It is easily shown that in an inconsistent formal system everything is provable."

This last sentence shows that Lucas assumes that the Propositional Calculus must of necessity be built into any formal system which carries out reasoning. In particular, he is thinking of the theorem <<**PA-P>DQ>** of the Propositional Calculus; evidently he has the erroneous belief that it is an inevitable feature of mechanized reasoning. However, it is perfectly plausible that logical thought processes, such as propositional reasoning, will emerge as *consequences* of the general intelligence of an At program, rather than being *preprogrammed*. This is what happens in humans! And there is no particular reason to assume that the strict Propositional Calculus, with its rigid rules and the rather silly definition of consistency that they entail, would emerge from such a program.

An Underpinning of Al

We can summarize this excursion into level distinctions and come away with one final, strongest version of the Church-Turing Thesis:

CHURCH-TURING THESIS, At VERSION: Mental processes of any sort can be simulated by a computer program whose underlying language is of

power equal to that of FlooP-that is, in which all partial recursive functions can be programmed.

It should also be pointed out that in practice, many AI researchers rely on another article of faith which is closely related to the CT-Thesis, and which I call the AI *Thesis*. It runs something like this:

AI THESIS: As the intelligence of machines evolves, its underlying mechanisms will gradually converge to the mechanisms underlying human intelligence.

In other words, all intelligences are just variations on a single theme; to create true intelligence, At workers will just have to keep pushing to ever lower levels, closer and closer to brain mechanisms, if they wish their machines to attain the capabilities which we have.

Church's Theorem

Now let us come back to the Crab and to the question of whether his decision procedure for theoremhood (which is presented in the guise of a filter for musical beauty) is compatible with reality. Actually, from the events which occur in the Dialogue, we have no way of deducing whether the Crab's gift is an ability to tell theorems from nontheorems, or alternatively, an ability to tell true statements from false ones. Of course in many cases this amounts to the same thing but Gödel's Theorem shows that it doesn't always. But no matter: both of these alternatives are impossible, if you believe the At Version of the Church-Turing Thesis. The proposition that it is impossible to have a decision procedure for theoremhood in any formal system with the power of TNT is known as Church's Theorem. The proposition that it is impossible to have a decision procedure for number theoretical truth-if such truth exists, which one can well doubt after meeting up with all the bifurcations of TNT-follows quickly from Tarski's Theorem (published in 1933, although the ideas were known to Tarski considerably earlier).

The proofs of these two highly important results of metamathematics are very similar. Both of them follow quite quickly from self-referential constructions. Let us first consider the question of a decision procedure for TNT-theoremhood. If there were a uniform way by which people could decide which of the classes "theorem" and "nontheorem" any given formula X fell into, then, by the CT-Thesis (Standard Version), there would exist a terminating FlooP program (a general recursive function) which could make the same decision, when given as input the Gödel number of formula X. The crucial step is to recall that any property that can be tested for by a terminating FlooP program is represented in TNT. This means that the property of TNT-theoremhood would be represented (as distinguished from merely expressed) inside TNT. But as we shall see in a moment, this,

would put us in hot water, for if theoremhood is a representable attribute, then Gödel's formula G becomes as vicious as the Epimenides paradox.

It all hinges on what G says: "G is not a theorem of TNT". Assume that G were a theorem. Then, since theoremhood is supposedly represented, the TNT-formula which asserts "G is a theorem" would be a theorem of TNT. But this formula is -G, the negation of G, so that TNT is inconsistent. On the other hand, assume G were not a theorem. Then once again by the supposed representability of theoremhood, the formula which asserts "G is not a theorem" would be a theorem of TNT. But this formula is G, and once again we get into paradox. Unlike the situation before, there is no resolution of the paradox. The problem is created by the assumption that theorernhood is represented by some formula of TNT, and therefore we must backtrack and erase that assumption. This forces us also to conclude that no FlooP program can tell the Gödel numbers of theorems from those of nontheorems. Finally, if we accept the Al Version of the CT-Thesis, then we must backtrack further, and conclude that no method whatsoever could exist by which humans could reliably tell theorems from nontheorems-and this includes determinations based on beauty. Those who subscribe only to the Public-Processes Version might still think the Crab's performance is possible; but of all the versions, that one is perhaps the hardest one to find any justification for.

Tarski's Theorem

Now let us proceed to Tarski's result. Tarski asked whether there could be a way of expressing in TNT the concept of number-theoretical truth. That theoremhood is expressible (though not representable) we have seen; Tarski was interested in the analogous question regarding the notion of truth. More specifically, he wished to determine whether there is any TNT-formula with a single free variable *a* which can be translated thus:

"The formula whose Gödel number is a expresses a truth."

Let us suppose, with Tarski, that there is one-which we'll abbreviate as TRUE{a}. Now what we'll do is use the diagonalization method to produce a sentence which asserts about itself that it is untrue. We copy the Godel method exactly, beginning with an "uncle":

3a:<-TRUE{a}nARITHMOQUINE{a",a}>

Let us say the Gödel number of the uncle is t. We arithmoquine this very uncle, and produce the Tarski formula T:

3a:<--TRUE{a}AARITHMOQUINE{SSS ... SSSO/a",a}>
t S's

When interpreted, it says:

"The arithmoquinification of t is the
Gödel number of a false statement."

But since the arithmoquinification of t is T's own Gödel number, Tarski's formula T reproduces the Epimenides paradox to a tee inside TNT, saying of itself, "I am a falsity". Of course, this leads to the conclusion that it must be simultaneously true and false (or simultaneously neither). There arises now an interesting matter: What is so bad about reproducing the Epimenides paradox? Is it of any consequence? After all, we already have it in English, and the English language has not gone up in smoke.

The Impossibility of the Magnificrab

The answer lies in remembering that there are two levels of meaning involved here. One level is the level we have just been using; the other is as a statement of number theory. If the Tarski formula T actually existed, then it would be a statement about natural numbers that is both true and false at once! There is the rub. While we can always just sweep the English-language Epimenides paradox under the rug, saying that its subect matter (its own truth) is abstract, this is' not so when it becomes a concrete statement about numbers! If we believe this is a ridiculous state of affairs, then we have to undo our assumption that the formula TRUE{a} exists. Thus, there is no way of expressing the notion of truth inside TNT. Notice that this makes truth a far more elusive property than theoremhood, for the latter is expressible. The same backtracking reasons as before (involving the Church-Turing Thesis, Al Version) lead us to the conclusion that

> The Crab's mind cannot be a truth-recognizer any more than it is a TNT-theorem-recognizer.

The former would violate the Tarski-Church-Turing Theorem ("There is no decision procedure for arithmetical truth"), while the latter would violate Church's Theorem.

Two Types of Form

It is extremely interesting, then, to think about the meaning of the word "form" as it applies to constructions of arbitrarily complex shapes. For instance, what is it that we respond to when we look at a painting and feel its beauty? Is it the "form" of the lines and dots on our retina? Evidently it must be, for that is how it gets passed along to the analyzing mechanisms in our heads-but the complexity of the processing makes us feel that we are not merely looking at a two-dimensional surface; we are responding to

some sort of inner meaning inside the picture, a multidimensional aspect trapped somehow inside those two dimensions. It is the word "meaning" which is important here. Our minds contain interpreters which accept
two-dimensional patterns and then "pull" from them high-dimensional notions which are so complex that we cannot consciously describe them. The same can be said about how we respond to music, incidentally.

It feels subjectively that the pulling-out mechanism of inner meaning is not at all akin to a decision procedure which checks for the presence or absence of some particular quality such as well-formedness in a string. Probably this is because inner meaning is something which reveals more of itself over a period of time. One can never be sure, as one can about well-formedness, that one has finished with the issue.

This suggests a distinction that could be drawn between two senses of "form" in patterns which we analyze. First, there are qualities such as well-formedness, which can be detected by predictably terminating tests, as in BlooP programs. These I propose to call syntactic qualities of form. One intuitively feels about the syntactic aspects of form that they lie close to the surface, and therefore they do not provoke the creation of multidimensional cognitive structures.

By contrast, the *semantic* aspects of form are those which cannot be tested for in predictable lengths of time: they require *open-ended tests*. Such an aspect is theoremhood of TNT-strings, as we have seen. You cannot just apply some standard test to a string and find out if it is a theorem. Somehow, the fact that its meaning is involved is crucially related to the difficulty of telling whether or not a string is a TNT-theorem. The act of pulling out a string's meaning involves, in essence, establishing all the implications of its connections to all other strings, and this leads, to be sure, down an open-ended trail. So "semantic" properties are connected to open-ended searches because, in an important sense, an object's *meaning is not localized* within the object itself. This is not to say that no understanding of any object's meaning is possible until the end of time, for as time passes, more and more of the meaning unfolds. However, there are always aspects of its meaning which will remain hidden arbitrarily long.

Meaning Derives from Connections to Cognitive Structures

Let us switch from strings to pieces of music, just for variety. You may still substitute the term "string" for every reference to a piece of music, if you prefer. The discussion is meant to be general, but its flavor is better gotten across, I feel, by referring to music. There is a strange duality about the meaning of a piece of music: on the one hand, it seems to be spread around, by virtue of its relation to many other things in the world-and yet, on the other hand, the meaning of a piece of music is obviously derived from the music itself, so it must be localized somewhere inside the music.

The resolution of this dilemma comes from thinking about the interpreter-the mechanism which does the pulling-out of meaning. (By "inter

preter in this context, I mean not -the performer of the piece, but the mental mechanism in the listener which derives meaning when the piece is played.) The interpreter may discover many important aspects of a piece's meaning while hearing it for the first time; this seems to confirm the notion that the meaning is housed in the piece itself, and is simply being read off. But that is only part of the story. The music interpreter works by setting up a multidimensional cognitive structure-a mental representation of *_he piece-which it tries to integrate with pre-existent information by finding links to other multidimensional mental structures which encode previous experiences. As this process takes place, the full meaning gradually unfolds. In fact, years may pass before someone comes to feel that he has penetrated to the core meaning of a piece. This seems to support the opposite view: that musical meaning is spread around, the interpreter's role being to assemble it gradually.

The truth undoubtedly lies somewhere in between: meanings-both musical and linguistic-are to some extent localizable, to some extent spread around. In the terminology of Chapter VI, we can say that musical pieces and pieces of text are partly triggers, and partly carriers of explicit meaning. A vivid illustration of this dualism of meaning is provided by the example of a tablet with an ancient inscription: the meaning is partially stored in the libraries and the brains of scholars around the world, and yet it is also obviously implicit in the tablet itself.

Thus, another way of characterizing the difference between "syntactic" and "semantic" properties (in the just-proposed sense) is that the syntactic ones reside unambiguously inside the object under consideration, whereas semantic properties depend on its relations with a potentially infinite class of other objects, and therefore are not completely localizable. There is nothing cryptic or hidden, in principle, in syntactic properties, whereas hiddenness is of the essence in semantic properties. That is the reason for my suggested distinction between "syntactic" and "semantic" aspects of visual form.

Beauty, Truth, and Form

What about beauty? It is certainly not a syntactic property, according to the ideas above. Is it even a semantic property? Is beauty a property which, for instance, a particular painting has? Let us immediately restrict our consideration to a single viewer. Everyone has had the experience of finding something beautiful at one time, dull another time-and probably intermediate at other times. So is beauty an attribute which varies in time? One could turn things around and say that it is the beholder who has varied in time. Given a particular beholder of a particular painting at a particular time, is it reasonable to assert that beauty is a quality that is definitely present or absent? Or is there still something ill-defined and intangible about it?

Different levels of interpreter probably could be invoked in every

person, depending on the circumstances. These various interpreters pull out different meanings, establish different connections, and generally evaluate all deep aspects differently. So it seems that this notion of beauty is extremely hard to pin down. It is for this reason that I chose to link beauty, in the Magnificrab, with truth, which we have seen is also one of the most intangible notions in all of metamathematics.

The Neural Substrate of the Epimenides Paradox

I would like to conclude this Chapter with some ideas about that central problem of truth, the Epimenides paradox. I think the Tarski reproduction of the Epimenides paradox inside TNT points the way to a deeper understanding of the nature of the Epimenides paradox in English. What Tarski found was that his version of the paradox has two distinct levels to it. On one level, it is a sentence about itself which would be true if it were false, and false if it were true. On the other level-which I like to call the arithmetical substrate-it is a sentence about integers which is true if and only if false.

Now for some reason this latter bothers people a lot more than the former. Some people simply shrug off the former as "meaningless", because of its self-referentiality. But you can't shrug off paradoxical statements about integers. Statements about integers simply cannot be both true and false.

Now my feeling is that the Tarski transformation of the Epimenides paradox teaches us to look for a substrate in the English-language version. In the arithmetical version, the upper level of meaning is supported by the lower arithmetical level. Perhaps analogously, the self-referential sentence which we perceive ("This sentence is false") is only the top level of a dual-level entity. What would be the lower level, then? Well, what is the mechanism that language rides on? The brain. Therefore one ought to look for a neural substrate to the Epimenides paradox-a lower level of physical events which clash with each other. That is, two events which by their nature cannot occur simultaneously. If this physical substrate exists, then the reason we cannot make heads or tails of the Epimenides sentence is that our brains are trying to do an impossible task.

Now what would be the nature of the conflicting physical events? Presumably when you hear the Epimenides sentence, your brain sets up some "coding" of the sentence-an internal configuration of interacting symbols. Then it tries to classify the sentence as "true" or "false". This classifying act must involve an attempt to force several symbols to interact in a particular way. (Presumably this happens when any sentence is processed.) Now if it happens that the act of classification would physically disrupt the coding of the sentence-something which would ordinarily never happen-then one is in trouble, for it is tantamount to trying to force a record player to play its self-breaking record. We have described the conflict in physical terms, but not in neural terms. If this analysis is right so

far, then presumably the rest of the discussion could be carried on when we know • something about the constitution of the "symbols" in the brain out of neurons and their firings, as well as about the way that sentences become converted into "codings".

This sketch of the neural substrate of the Epimenides paradox suggests (to me, at least) that the resolution of the English version of the Epimenides paradox might be similar to that for the Tarski version. The resolution involves abandoning the notion that a brain could ever provide a fully accurate representation for the notion of truth. The novelty of this resolution lies in its suggestion that a total modeling of truth is impossible for quite physical reasons: namely, such a modeling would require physically incompatible events to occur in a brain.

SHRDLU,
Toy of Man's Designing

One day, Eta Oin wanders into the MIT Artificial Intelligence Laboratory, where she runs into the brilliant young computer program, SHRDLU. It happens that SHRDLU is just dying for someone to try out the newly developed human being "Dr. Tony Earrwig". SHRDLU explains that this Earrwig is fairly intelligent in the limited domain of analyzing a conversation about a "toy world" containing blocks of various shapes, sizes, and colors-blocks which sit on a table, and which can be picked up and moved around. Eta Oin, fascinated, begins enthusiastically typing to SHRDLU. Earrwig dangles over her shoulder and provides a sort of running commentary, as promised.

1. Eta Oin: pick up a big red block. [Refer to Fig. 110.
   SHRDLU: OK.
   Dr. Tony Earrwig: SHRDLU answers "OK" when it carries out a command. In order to pick up the red block, it had to clear it off by finding a space for the green one and moving the green one away.
2. Eta Oin: grasp the pyramid.
   SHRDLU: I DON'T UNDERSTAND WHICH PYRAMID YOU MEAN.
   Dr. Tony Earrwig: There are three pyramids in the scene, and SHRDLU knows that phrases beginning with "the" are intended to refer to a specific object the speaker has in mind.

FIGURE 110. *"Pick up a big red block." [From Terry Winograd, Understanding Natural Language, (New York: Academic Press, 1972), p. 8.1*

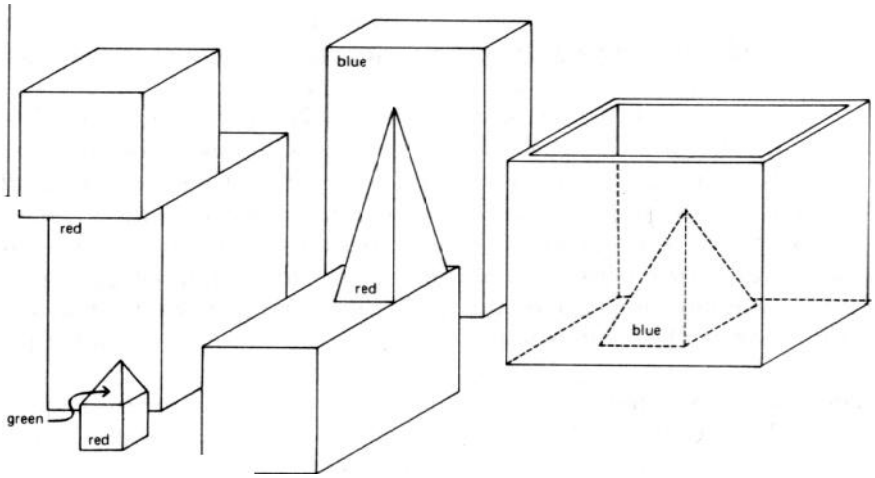

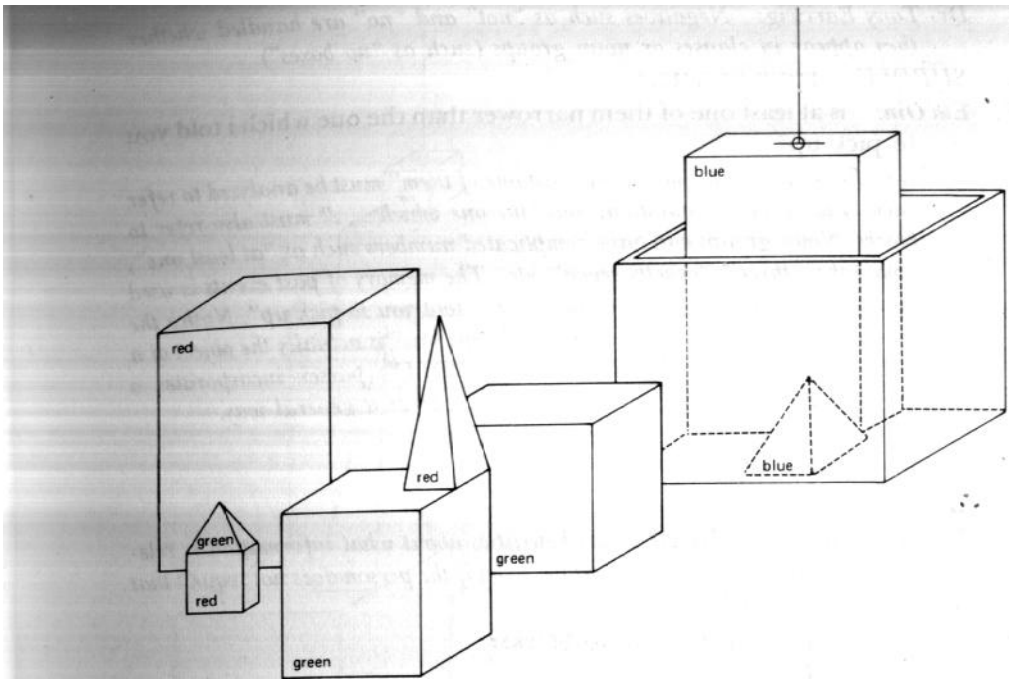

FIGURE 111. "*Find a block which is bigger than the one you are holding and put it into the box." Adapted from Terry Winograd, Understanding Natural Language, p.9.]*

3. Eta Oin: find a block which is taller than the one you are holding and put it into the box. [Refer to Fig. 111.]
Dr. Tony Earrwig: SHRDLU has to figure out what is meant by "one" and "it", as well as using deduction to decide which block it is holding.
SHRDLU: BY "IT", I ASSUME YOU MEAN THE BLOCK WHICH IS TALLER THAN THE ONE I AM HOLDING.
Dr. Tony Earrwig: There were two possible referents for "it": the one selected, and "the one you are holding". SHRDLU has heuristics for choosing between them.
SHRDLU: OK.
Dr. Tony Earrwig: SHRDLU's hand has to set down the red block pick up the taller blue one.

Eta Oin: what does the box contain?
SHRDLU: THE BLUE PYRAMID AND THE BLUE BLOCK.

Eta Oin: what is the pyramid supported by?
Dr. Tony Earrwig: Earlier SHRDLU responded to "the pyramid" by saying "I DON'T UNDERSTAND WHICH PYRAMID YOU MEAN." Now, it assumes that you mean the one just mentioned.
SHRDLU: THE BOX.

Eta Oin: how many blocks are not in the box?

Dr. Tony Earrwig: *Negatives such as "not" and "no" are handled whether they appear in clauses or noun groups (such as "no boxes").*

SHRDLU: FOUR OF THEM.

7. Eta Oin: is at least one of them narrower than the one which i told you to pick up?

Dr. Tony Earrwig: The phrase "at least one of them" must be analyzed to refer back to the previous question, and "the one which ..." must also refer to blocks. Noun groups can have complicated numbers such as "at least one", "more than three", "exactly seven", etc.. The memory of past events is used to deduce which block is "the one which I told you to pick up". Notice the complicated syntactic structure in which "the one" is actually the object of a clause embedded two levels deeper. SHRDLU's parser incorporates a grammar that handles this kind of complexity in a general way.

SHRDLU: YES, THE RED CUBE.

8. Eta Oin: is it supported?

SHRDLU: YES, BY THE TABLE.

Dr. Tony Earrwig: SHRDLU has heuristics about what information is relevant to a person who asks a question, even if the person does not request that information specifically.

9. Eta Oin: can the table pick up blocks?

SHRDLU: NO,

Dr. Tony Earrwig: SHRDLU's semantic rules include the knowledge that "picking up" must be done by an animate object, and that the table is not animate.

10. Eta Oin: can a pyramid be supported by a block?

SHRDLU: YES.

Dr. Tony Earrwig:• SHRDLU's deductive system finds an actual example, so it knows this is possible.

11. Eta Oin: can a pyramid support a pyramid?

SHRDLU: I DON'T KNOW.

Dr. Tony Earrwig: The question makes sense, but there is no example in the scene. SHRDLU has no way of looking into the details of its programs, even though these ultimately define its capabilities.

12. Eta Oin: stack up two pyramids.

SHRDLU: I CANT.

Dr. Tony Earrwig: SHRDLU tries and fails.

13. Eta Oin: the blue pyramid is mine.

SHRDLU: I UNDERSTAND.

Dr. Tony Earrwig: All of the information about colors, shapes, sizes and locations of the objects is known to SHRDLU initially. Possession is left as an unknown property of objects about which it can be told. It stores this information in its data base.

14. Eta Gin: i own all blocks which are not red, but i don't own anything which supports a pyramid.

SHRDLU: I UNDERSTAND.

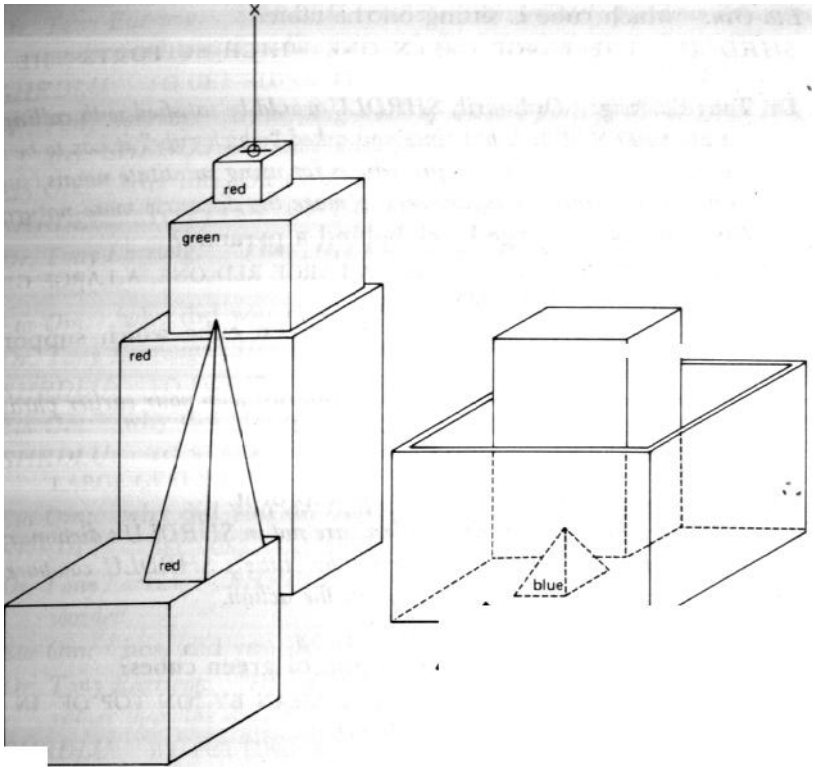

FIGURE 112. "*Will you please stack up both of the red blocks and either a green cube or a pyramid?" [Adapted from Terry Winograd, Understanding Natural Language, p. 12*.

Dr. Tony Earrwig: The result of understanding these sentences is the creation of new procedures within SHRDLU for deducing whether you own something.

15. Eta Oin: do i own the box?
    SHRDLU: NO.
    Dr. Tony Earrwig: The box supports whatever it contains, including a pyramid.
16. Eta Oin: do i own anything in the box?
    SHRDLU: YES, TWO THINGS: THE BLUE BLOCK AND PYRAMID.
17. Eta Oin: will you please stack up both of the red blocks and either a green cube or a pyramid? [Refer to Fig. 112.
    SHRDLU: OK.
    Dr. Tony Earrwig: Logical connectives, such as "and", "or", "either", etc. are handled in both the grammar and semantics. A command is executed even if it looks like a question. The. command is carried out by the following series of steps: SHRDLU puts a green cube on the large red block (it chooses the green cube with nothing on it), then removes the small pyramid from the little red cube, so that it can use that cube to complete the stack as specified.

18. Eta Oin: which cube is sitting on the table?

SHRDLU: THE LARGE GREEN ONE WHICH SUPPORTS THE RED PYRAMID.

Dr. Tony Earrwig: Ordinarily SHRDLU would be satisfied with calling this "A BIG GREEN CUBE", but since you asked "which cube" it has to be more spec /lc in naming it. It has procedures for using substitute nouns (such as "one") and pronouns in answers to make the discourse more natural.

19. Eta Oin: is there a large block behind a pyramid?

SHRDLU: YES, THREE OF THEM: A LARGE RED ONE, A LARGE GREEN CUBE AND THE BLUE ONE.

20. Eta Oin: put a small one onto the green cube which supports a pyramid.

Dr. Tony Earrwig: "A small one" must contrast with your earlier phrase "a large block", so this means "a small block". SHRDLU: OK,

21. Eta Oin: put the littlest pyramid on top of it.

Dr. Tony Earrwig: Words like "littlest" are not in SHRDLU's dictionary but are interpreted from the root farms like "little". SHRDLU compares the sizes of all the pyramids to carry out the action.

SHRDLU• OK.

22. Eta Oin: how many things are on top of green cubes?

SHRDLU: I'M NOT SURE WHAT YOU MEAN BY "ON TOP OF" IN THE PHRASE "ON TOP OF GREEN CUBES"

DO YOU MEAN

1-DIRECTLY ON THE SURFACE

2-ANYWHERE ON TOP OF IT?

Dr. Tony Earrwig: In the previous sentence, the phrase "on top of " was interpreted without trouble because the context made it clear what was meant. In this one, the heuristics for disambiguation do not come up with a clearcut definition, so SHRDLU had to ask you for more information. The paraphrases were included with the dictionary definitions of "on". A request like this can also occur when the meaning of a pronoun such as "it" or "they" is unclear.

23. Eta Din: had you touched any pyramid before you put the green one on the little cube?

SHRDLU: YES, THE GREEN ONE.

Dr. Tony Earrwig: SHRDLU deduces from its memory what event is being referred to, and can relate other events to it in time. The analysis includes complex tenses of verb groups, and there are special facilities for keeping track of the various forms of irregular verbs like "have".

24. Eta Oin: when did you pick it up?

SHRDLU: WHILE I WAS STACKING UP THE RED CUBE, A LARGE RED BLOCK AND A LARGE GREEN ONE.

Dr. Tony Earrwig: A time is described by naming the main goal which was being worked on.

25. Eta Oin: why?

Dr. Tony Earrwig: SHRDLU remembers immediately previous sentences to understand questions like this and the following ones.

SHRDLU: TO GET RID OF IT.

Dr. Tony Earrwig: By keeping track of selected parts of the original subgoal tree, SHRDLU has some understanding of its own motives.

26. Eta Oin: why did you do that?

SHRDLU: TO CLEAN OFF THE RED CUBE.

Dr. Tony Earrwig: "That" refers to the action mentioned in SHRDLU's last answer.

27. Eta Oin: why did you clear off that cube?

Dr. Tony Earrwig: Here, "that" means the one just referred to. SHRDLU: TO PUT IT ON A LARGE GREEN CUBE.

28. Eta Oin: why did you do that?

SHRDLU: TO STACK UP THE RED CUBE, A LARGE RED BLOCK, AND A LARGE GREEN CUBE.

29. Eta Oin: why did you do that?

SHRDLU.' BECAUSE YOU ASKED ME TO.

Dr. Tony Earrwig: SHRDLU remembers what it did, not how the request was worded.

30. Eta Oin: how did you do it?

Dr. Tony Earrwig: "It" refers to the action mentioned in the last question, rather than the answer.

SHRDLU: BY PUTTING A LARGE RED BLOCK ON THE TABLE; THEN LETTING GO OF IT; THEN PUTTING A LARGE GREEN CUBE ON IT; THEN LETTING GO OF THAT CUBE; THEN PUTTING THE RED CUBE ON THAT CUBE; THEN LETTING GO OF THAT CUBE.

Dr. Tony Earrwig: This is a description of the top-level subgoals used to achieve the goal.

31. Eta Oin: how many objects did you touch while you were doing it?

Dr. Tony Earrwig: Time references can refer to a time span, using words like "while".

SHRDLU: FOUR OF THEM.

32. Eta Oin: what did the red cube support before you started to clean it off?

SHRDLU: THE GREEN PYRAMID.

Dr. Tony Earrwig: By remembering what has been moved, it is possible to deduce things about earlier states of the scene. You can use complex nestings of clauses like "before you started to clean it off ".

33. Eta Oin: there were five blocks to the left of the box then.

Dr. Tony Earrwig: "Then" must refer to the time mentioned in the last sentence.

SHRDLU: NO, ONLY FOUR OF THEM: THE RED CUBE, TWO LARGE GREEN CUBES, AND A LARGE RED BLOCK.

Dr. Tony Earrwig: Earlier in the dialogue, information about "owning" was accepted at face value. But SHRDLU knows that it has complete infornia-

tion about the basic properties of objects, including location. It checks any statements about these to see whether it agrees or disagrees.

34. Eta Oin: put the blue pyramid on the block in the box.

    Dr. Tony Earrwig: This is syntactically ambiguous, but is understood without ambiguity since the parsing corresponding to "put the blue pyramid which is on the block into the box" does not make sense in the current scene, whereas "put the blue pyramid onto the block which is in the box" does. SHRDLU: OK.

35. Eta Oin: is there anything which is bigger than every pyramid but is not as wide as the thing that supports it?

    Dr. Tony Earrwig: SHRDLU understands quantifiers such as "every", "any", "some", etc., and structures such as "bigger than", "as wide as", etc.. Here "it" refers to a noun group within the same sentence but two levels up in the parsing tree.

    SHRDLU: YES, THE BLUE BLOCK.

36. Eta Oin: does a steeple

    SHRDLU: SORRY, I DON'T KNOW THE WORD "STEEPLE".

    Dr. Tony Earrwig: SHRDLU interrupts immediately when it sees a word it doesn't know.

37. Eta Oin: a "steeple" is a stack which contains two green cubes and a pyramid.

    Dr. Tony Earrwig: The quote marks indicate that you are defining a new word. The definition is added to SHRDLU's dictionary in a form compatible with all the words it already knows.

    SHRDLU: I UNDERSTAND.

38. Eta Oin: are there any steeples now?

    SHRDLU: NO.

    Dr. Tony Earrwig: The new definition is used as a description to recognize steeples.

39. Eta Oin: build one.

    SHRDLU: OK.

    Dr. Tony Earrwig: The description given in the definition is enough to deduce a plan for building new objects as well as recognizing them. The word "one" means "a steeple", and the plan is carried out. First, one of the large green cubes is cleared off by removing the red cube and two pyramids. Then the two green cubes and the tall red pyramid are stacked up to fit the description.

40. Eta Oin: call the biggest block "superblock".

    SHRDLU: OK.

    Dr. Tony Earrwig: You can also give objects names.

41. Eta Oin: have you picked up superblock since we began?

    SHRDLU: YES.

42. Eta Oin: why did you drop it?

    SHRDLU: BY "IT", I ASSUME YOU MEAN THE SUPERBLOCK. I CAN'T EXPLAIN A NON-EXISTENT EVENT.

Dr. Tony Earrwig: There is no record in SHRDLU's memory of any block being dropped. The answer routines have special checks for this type of "loaded question" which presupposes things which aren't true.

43. Eta Oin: is there anything to the right of the red pyramid?

    SHRDLU: YES, FOUR THINGS: THE BOX, THE RED CUBE, THE BLUE PYRAMID AND THE BLOCK NAMED SUPERBLOCK.

    Dr. Tony Earrwig: Once an object has a name, the name is used to help identify it in responses.

44. Eta Oin: thank you.

    SHRDLU: YOU'RE WELCOME!

    Dr. Tony Earrwig: SHRDLU's grammar is written as a procedure, which gives SHRDLU the capability to carry out special sorts of parsing for idioms.

CHAPTER XVI11

Artificial Intelligence: Retrospects

Turing

IN 1950, ALAN TURING wrote a most prophetic and provocative article on Artificial Intelligence. It was entitled "Computing Machinery and Intelligence" and appeared in the journal *Mind*.' I will say some things about that article, but I would like to precede them with some remarks about Turing the man.

Alan Mathison Turing was born in London in 1912. He was a child full of curiosity and humor. Gifted in mathematics, he went to Cambridge where his interests in machinery and mathematical logic cross-fertilized and resulted in his famous paper on "computable numbers", in which he invented the theory of Turing machines and demonstrated the unsolvability of the halting problem; it was published in 1937. In the 1940's, his interests turned from the theory of computing machines to the actual building of real computers. He was a major figure in the development of computers in Britain, and a staunch defender of Artificial In-

FIGURE 113. *Alan Turing, after a successful race (May, 1950). [From Sara Turing, Alan M. Turing (Cambridge, U. K.:W. Heffer & Sons, 1959).*