Cann

MCU

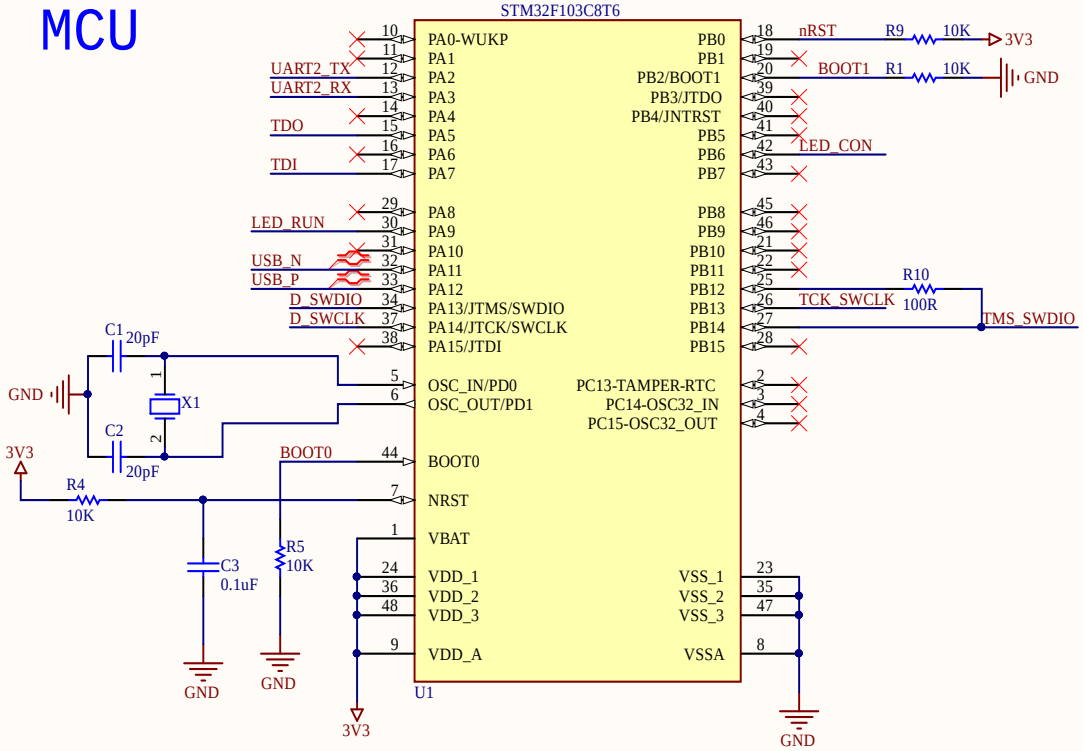

SWD

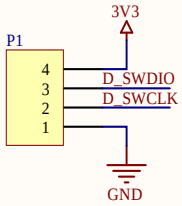

LED

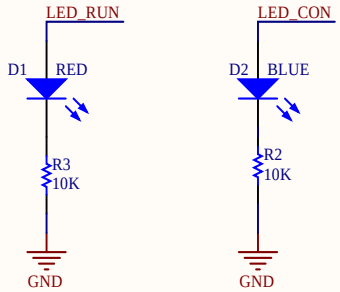

HEADER

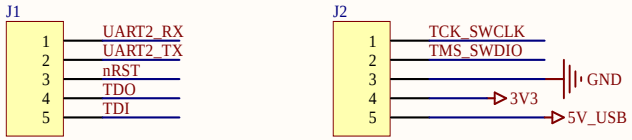

POWER

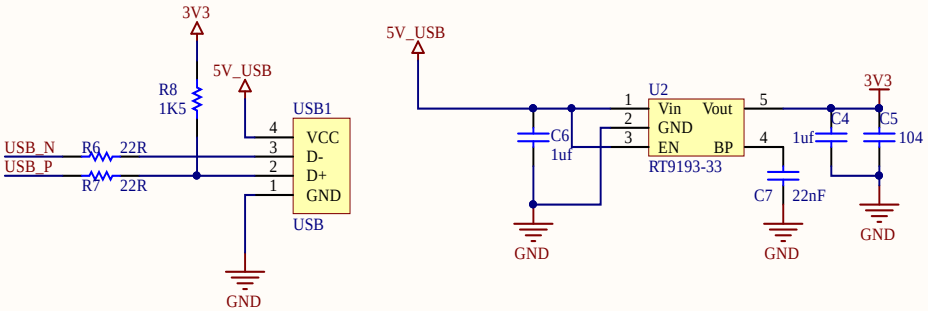

Title		
Size A4	Number	Revision
Date: 2018/12/26		Sheet of
File: E:\private\..\nanoDAP.SchDoc		Drawn By: