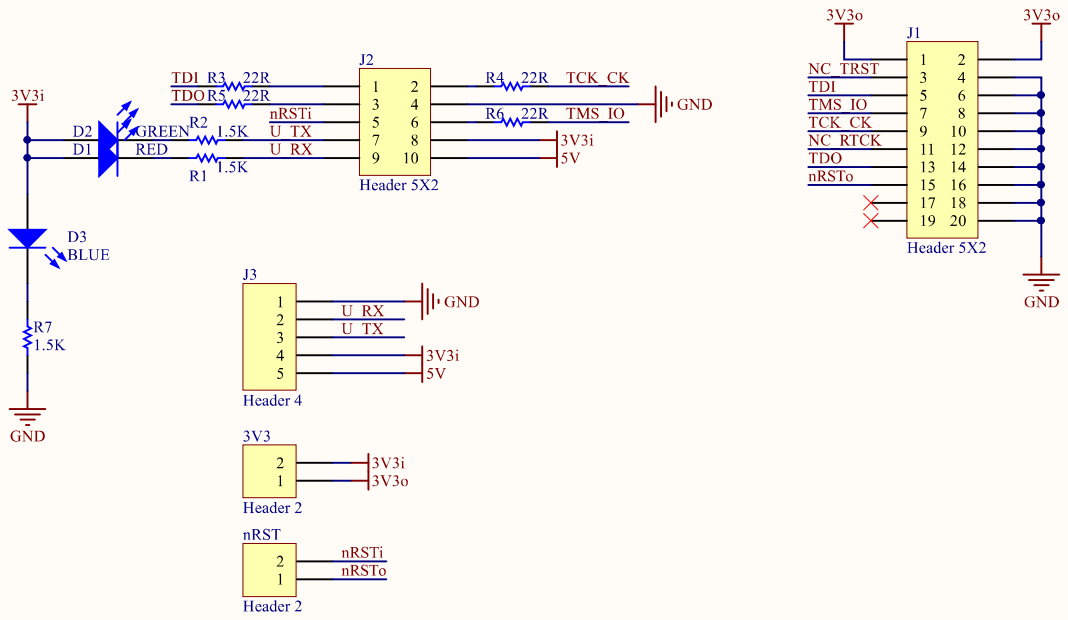

Title		
Size A4	Number	Revision
Date: 2020/3/17	Sheet of	
File: F:\private\..\nanoDAP.SchDoc	Drawn By:	