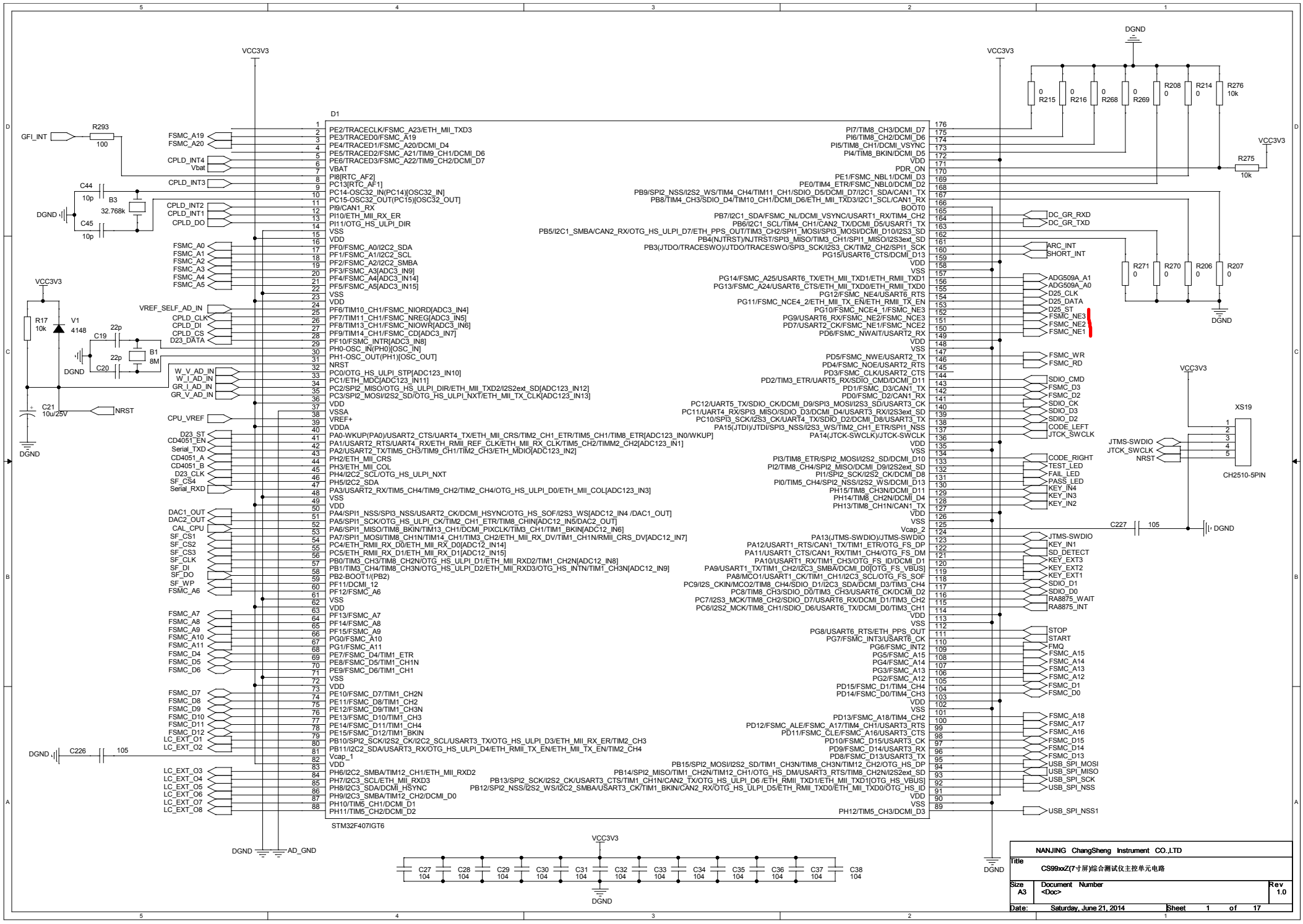
D1
STM32F407IGT6
VCC3V3
DGND
AD_GND
GFI_INT
R293
100
C44
10p
B3
32.768k
C45
10p
R17
10k
V1
4148
C19
22p
B1
8M
C20
22p
C21
10u/25V
NRST
C226
105
C227
105
R275
10k
XS19
CH2510-5PIN
JTMS-SWDIO
JTCK_SWCLK
NRST
C27 104
C28 104
C29 104
C30 104
C31 104
C32 104
C33 104
C34 104
C35 104
C36 104
C37 104
C38 104
NANJING ChangSheng Instrument CO.,LTD
Title
CS99xxZ(7寸屏)综合测试仪主控单元电路
Size A3
Document Number <Doc>
Rev 1.0
Date: Saturday, June 21, 2014
Sheet 1 of 17

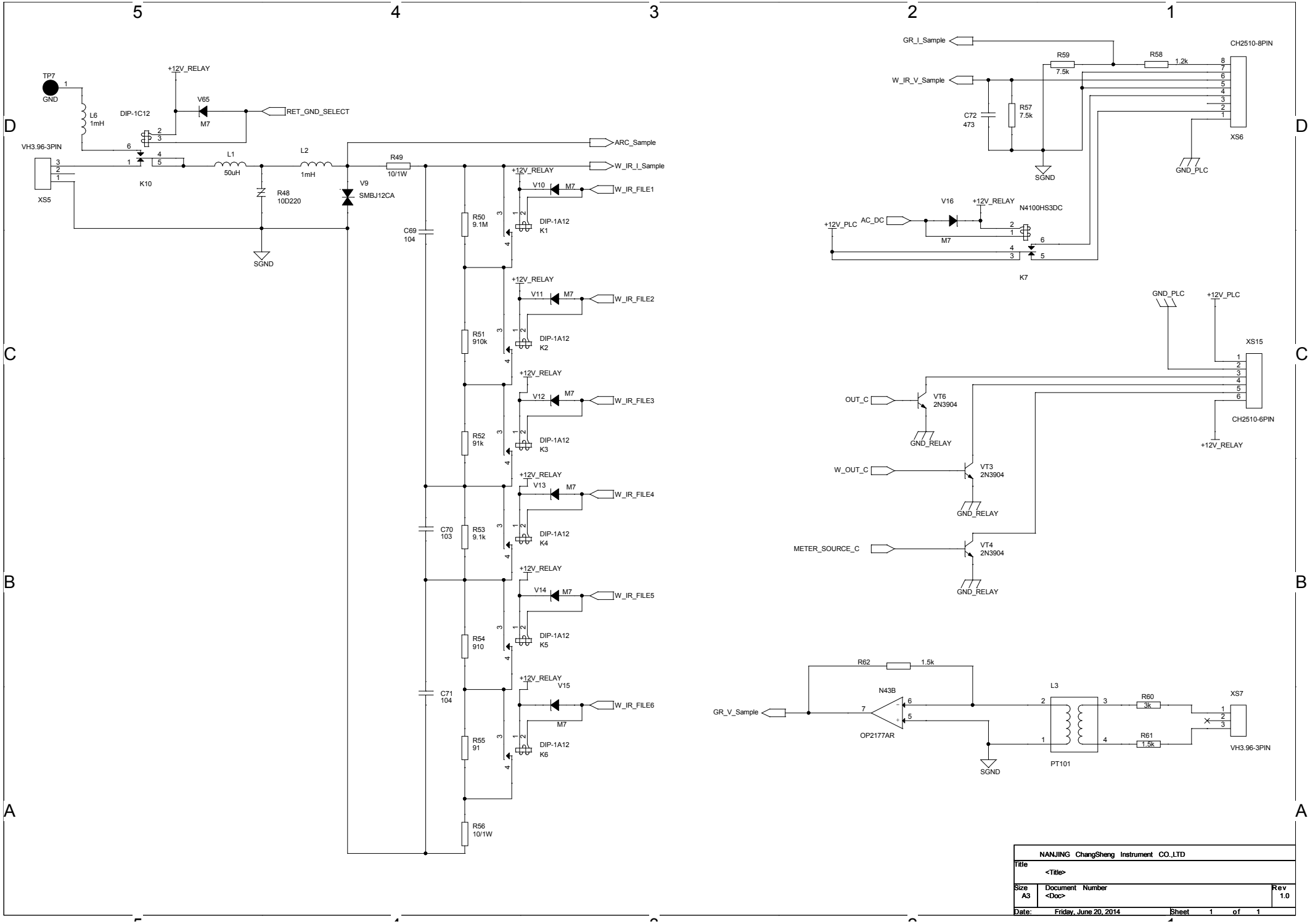
TP7
GND
L6
1mH
+12V_RELAY
DIP-1C12
V65
M7
RET_GND_SELECT
VH3.96-3PIN
XS5
K10
L1
50uH
L2
1mH
R48
10D220
V9
SMBJ12CA
SGND
R49
10/1W
ARC_Sample
W_IR_I_Sample
C69
104
C70
103
C71
104
R50
9.1M
R51
910k
R52
91k
R53
9.1k
R54
910
R55
91
R56
10/1W
V10
V11
V12
V13
V14
V15
W_IR_FILE1
W_IR_FILE2
W_IR_FILE3
W_IR_FILE4
W_IR_FILE5
W_IR_FILE6
DIP-1A12
K1
K2
K3
K4
K5
K6
GR_I_Sample
W_IR_V_Sample
R59
7.5k
R58
1.2k
CH2510-8PIN
XS6
C72
473
R57
7.5k
GND_PLC
V16
N4100HS3DC
+12V_PLC
AC_DC
K7
XS15
CH2510-6PIN
OUT_C
VT6
2N3904
GND_RELAY
W_OUT_C
VT3
2N3904
METER_SOURCE_C
VT4
2N3904
R62
1.5k
N43B
OP2177AR
GR_V_Sample
L3
PT101
R60
3k
R61
1.5k
XS7
VH3.96-3PIN
NANJING ChangSheng Instrument CO.,LTD
Title
<Title>
Size
A3
Document Number
<Doc>
Rev
1.0
Date: Friday, June 20, 2014
Sheet 1 of 1

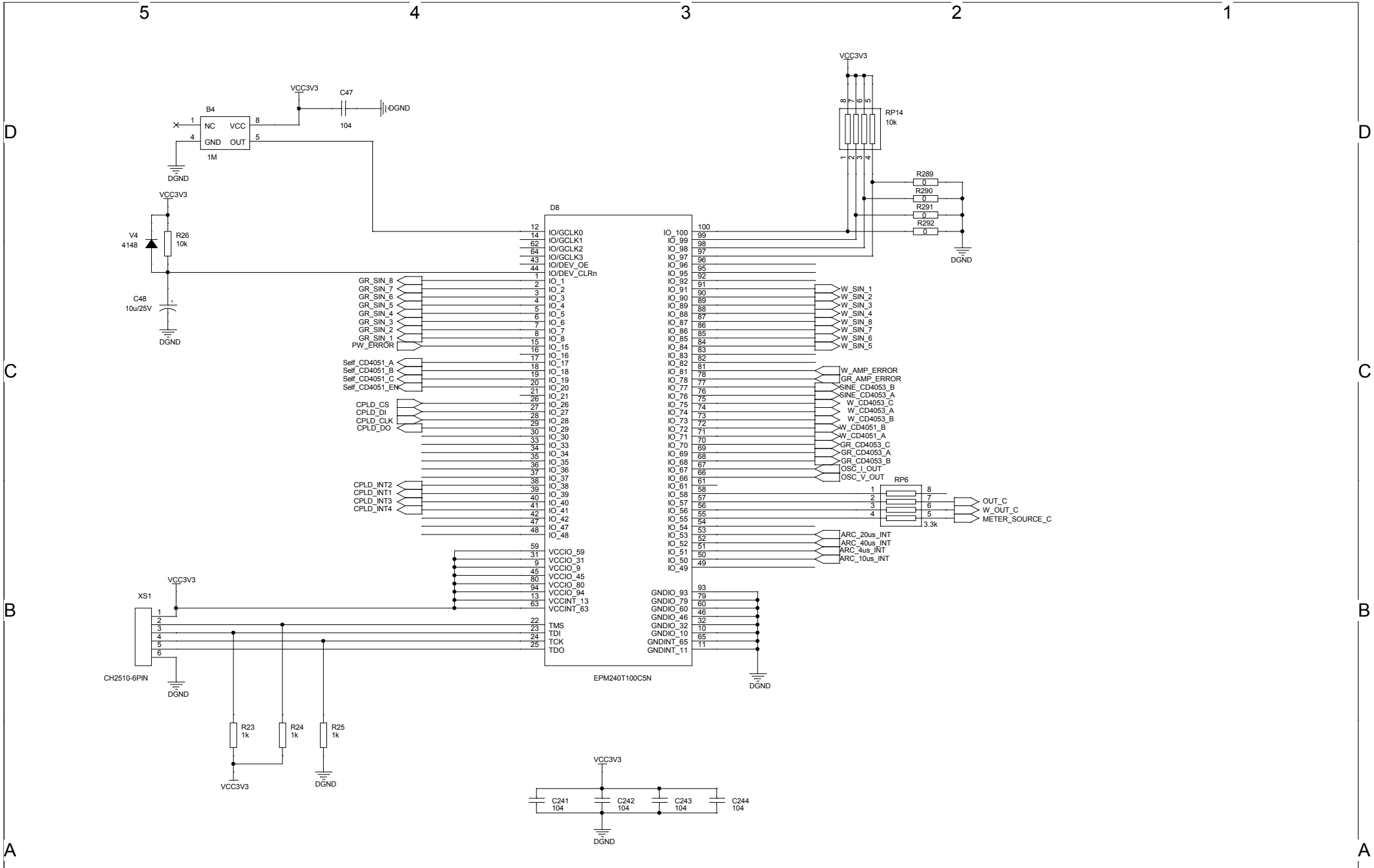

NANJING ChangSheng Instrument CO.,LTD		
Title: CS99xxZ(7寸屏) CPLD单元电路		
Size: A3	Document Number: <Doc>	Rev: 1.0
Date: Friday, June 20, 2014	Sheet 2 of 17	

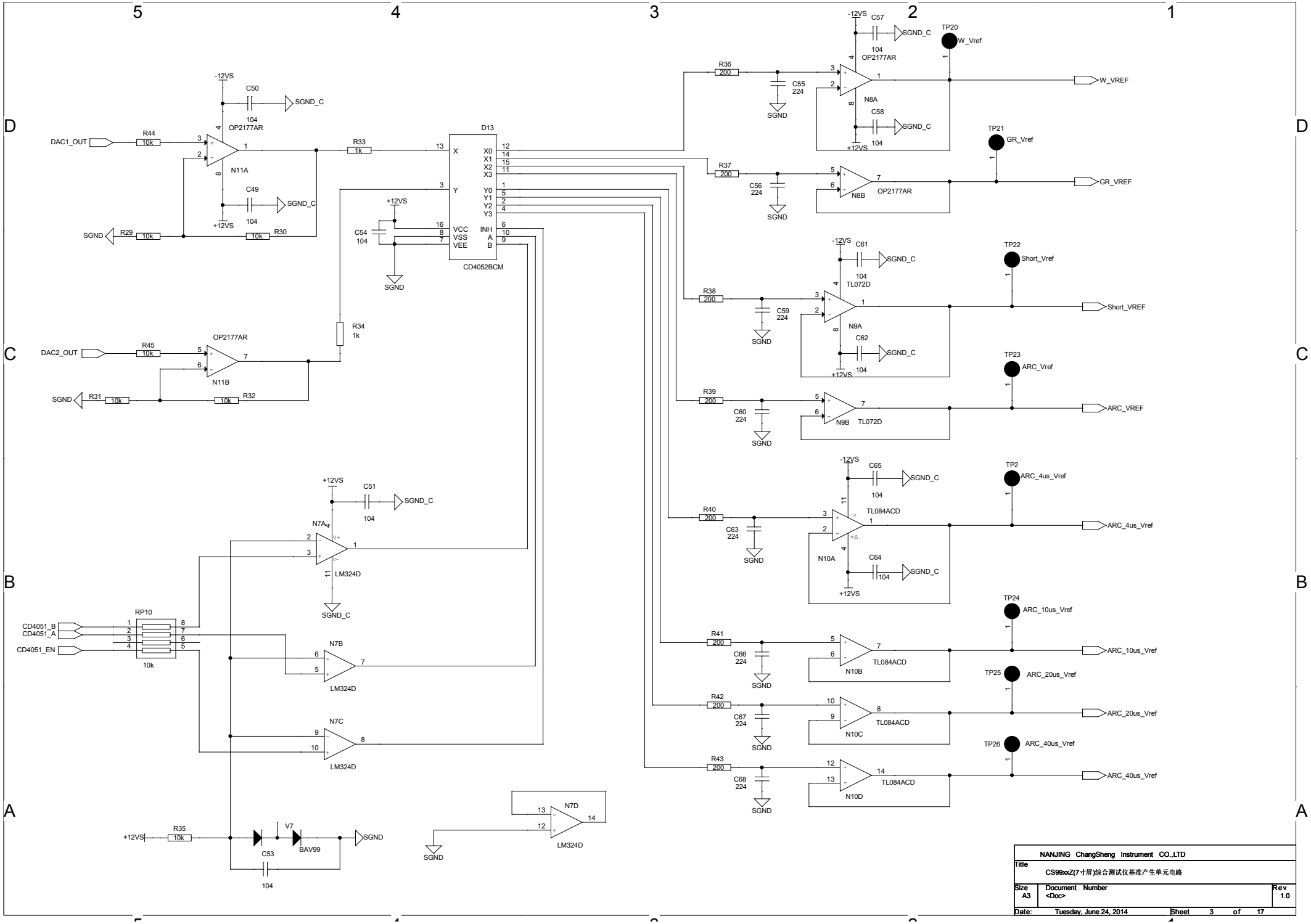

NANJING ChangSheng Instrument CO.,LTD		
Title	CS99xxZ(7寸屏)综合测试仪基准产生单元电路	
Size A3	Document Number <Doc>	Rev 1.0
Date: Tuesday, June 24, 2014	Sheet 3 of 17	

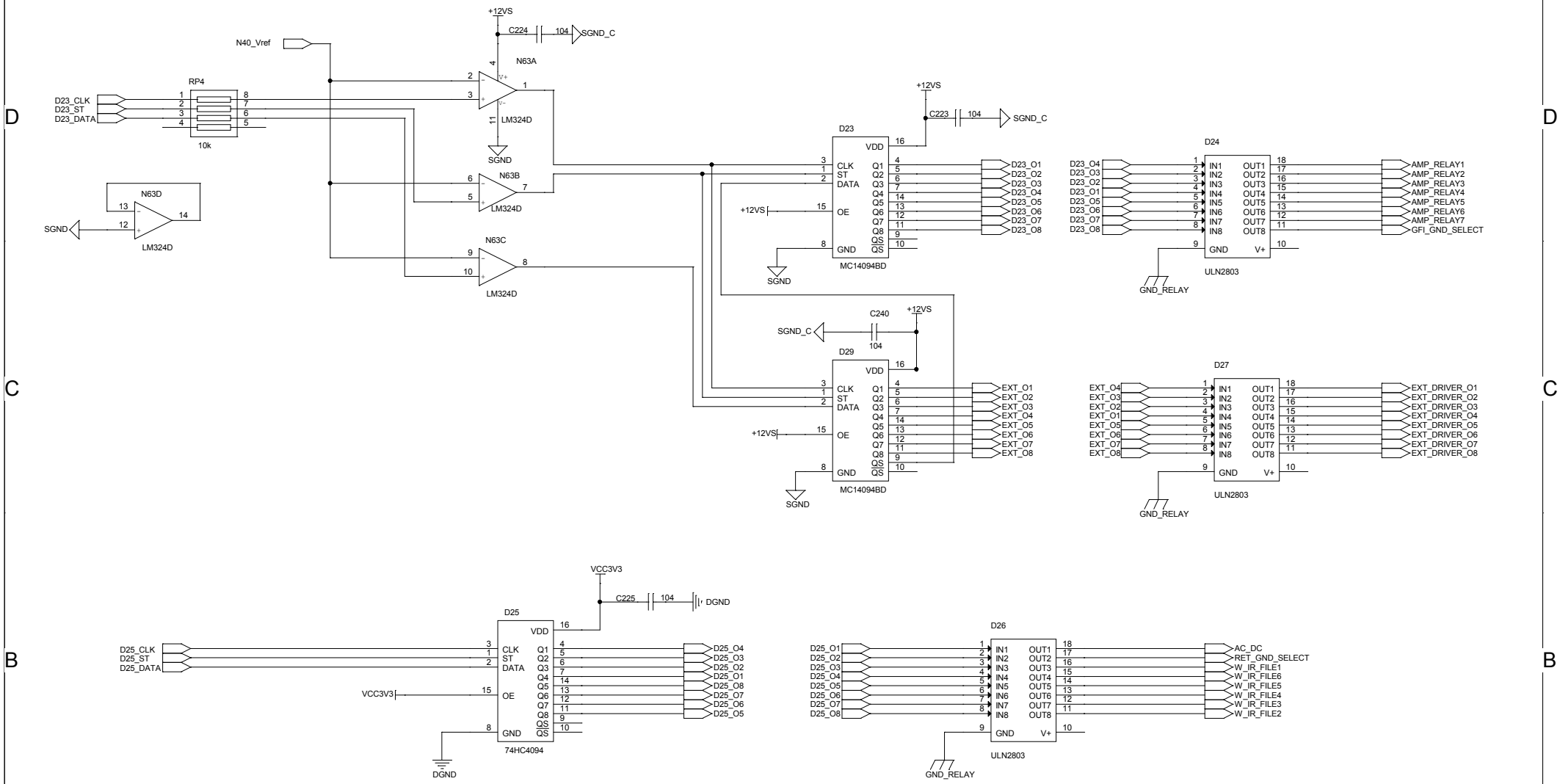

NANJING ChangSheng Instrument CO.,LTD		
Title: CS99xxZ(7寸屏)驱动单元电路		
Size: A3	Document Number: <Doc>	Rev: 1.0
Date: Friday, June 20, 2014	Sheet 4 of 17	

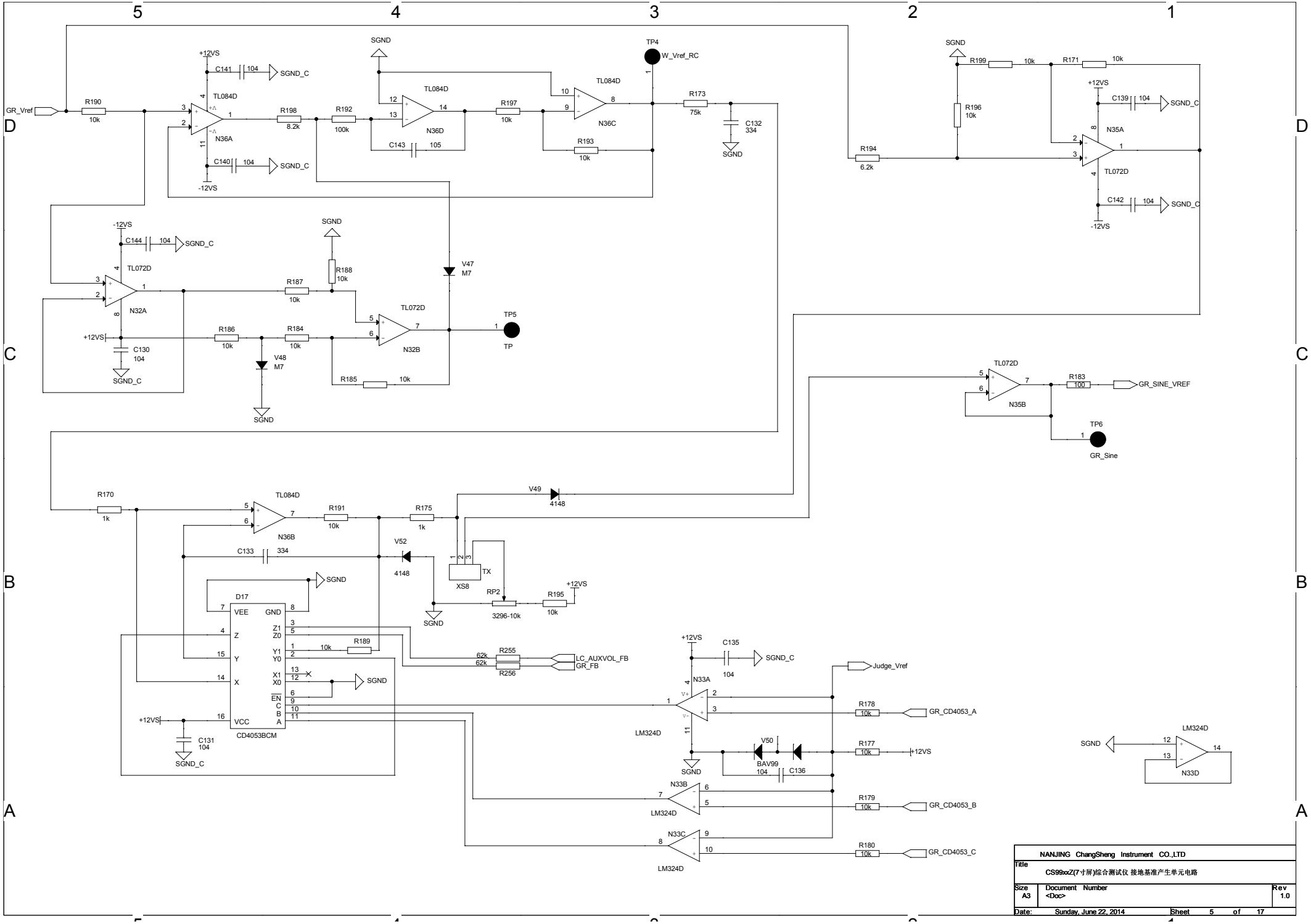

NANJING ChangSheng Instrument CO.,LTD	
Title	CS99xxZ(7寸屏)综合测试仪 接地基准产生单元电路
Size A3	Document Number <Doc> Rev 1.0
Date: Sunday, June 22, 2014	Sheet 5 of 17

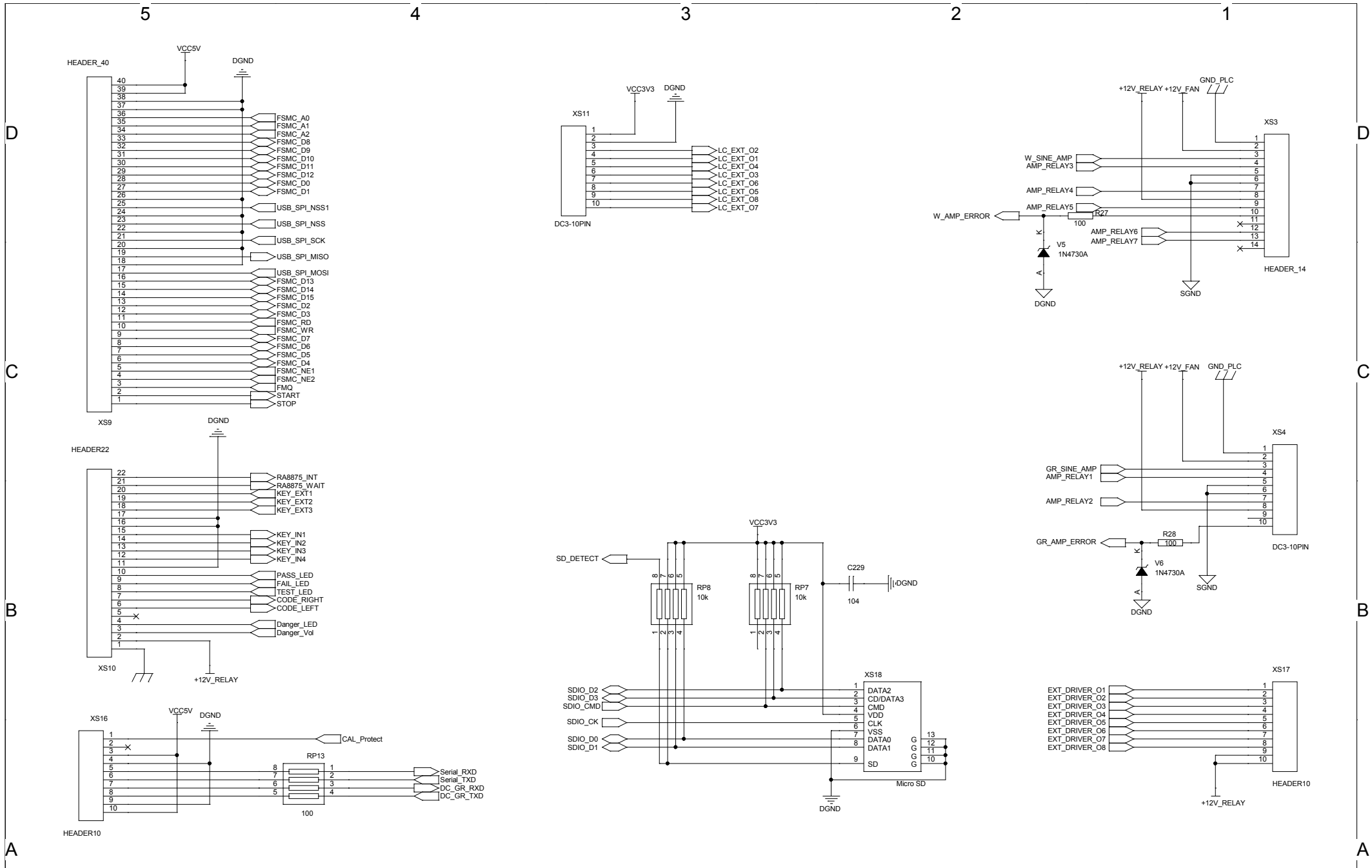

NANJING ChangSheng Instrument CO.,LTD

Title: CS99xxZ(7寸屏)综合测试仪接口单元电路

Size: A3 | Document Number: <Doc> | Rev: 1.0

Date: Tuesday, June 24, 2014 | Sheet 6 of 17

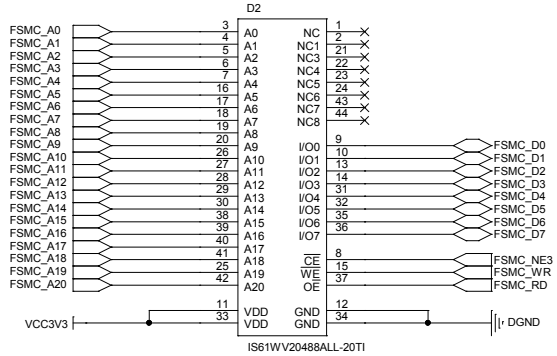

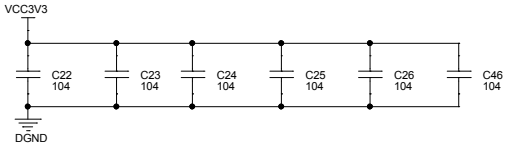

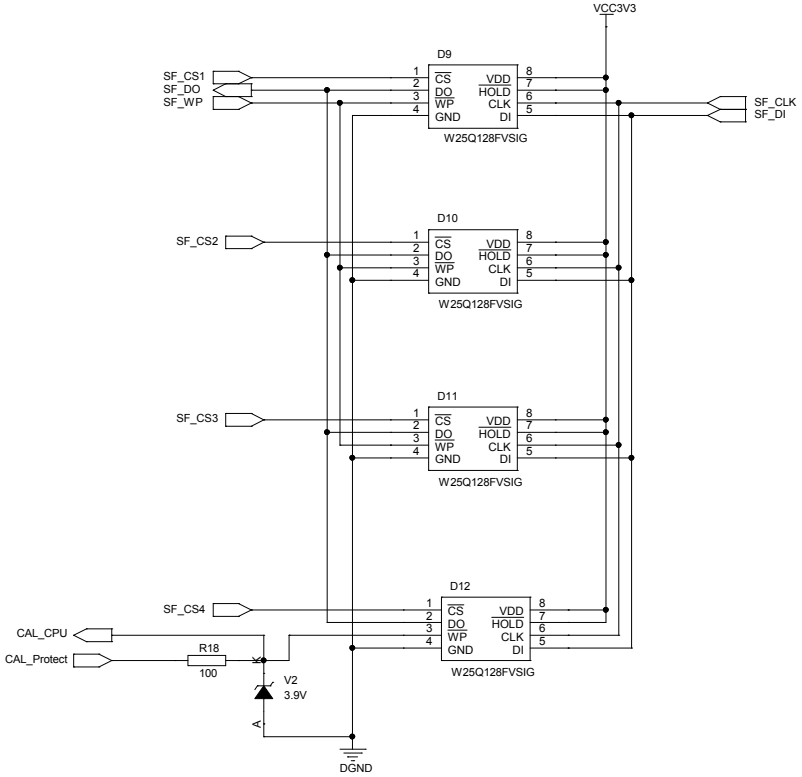

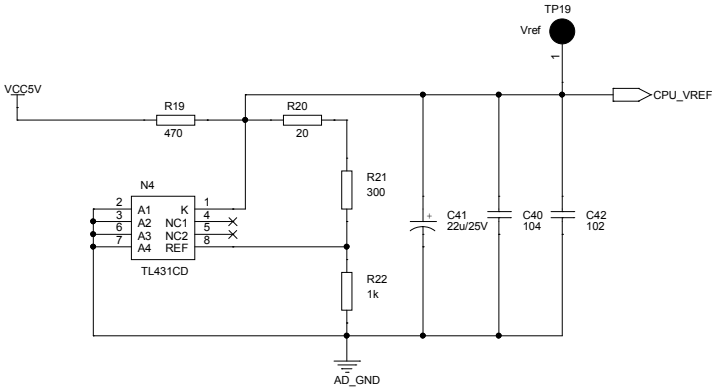

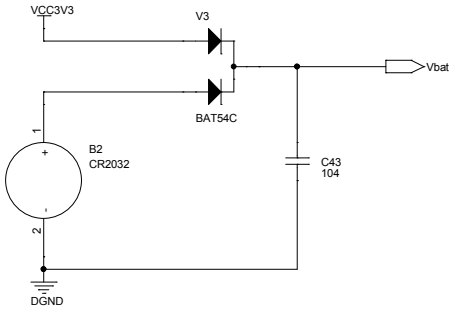

NANJING ChangSheng Instrument CO.,LTD		
Title: CS99xxZ(7寸屏)综合测试仪存储器单元电路		
Size: A3	Document Number: <Doc>	Rev: 1.0
Date: Monday, June 23, 2014	Sheet 7 of 17	

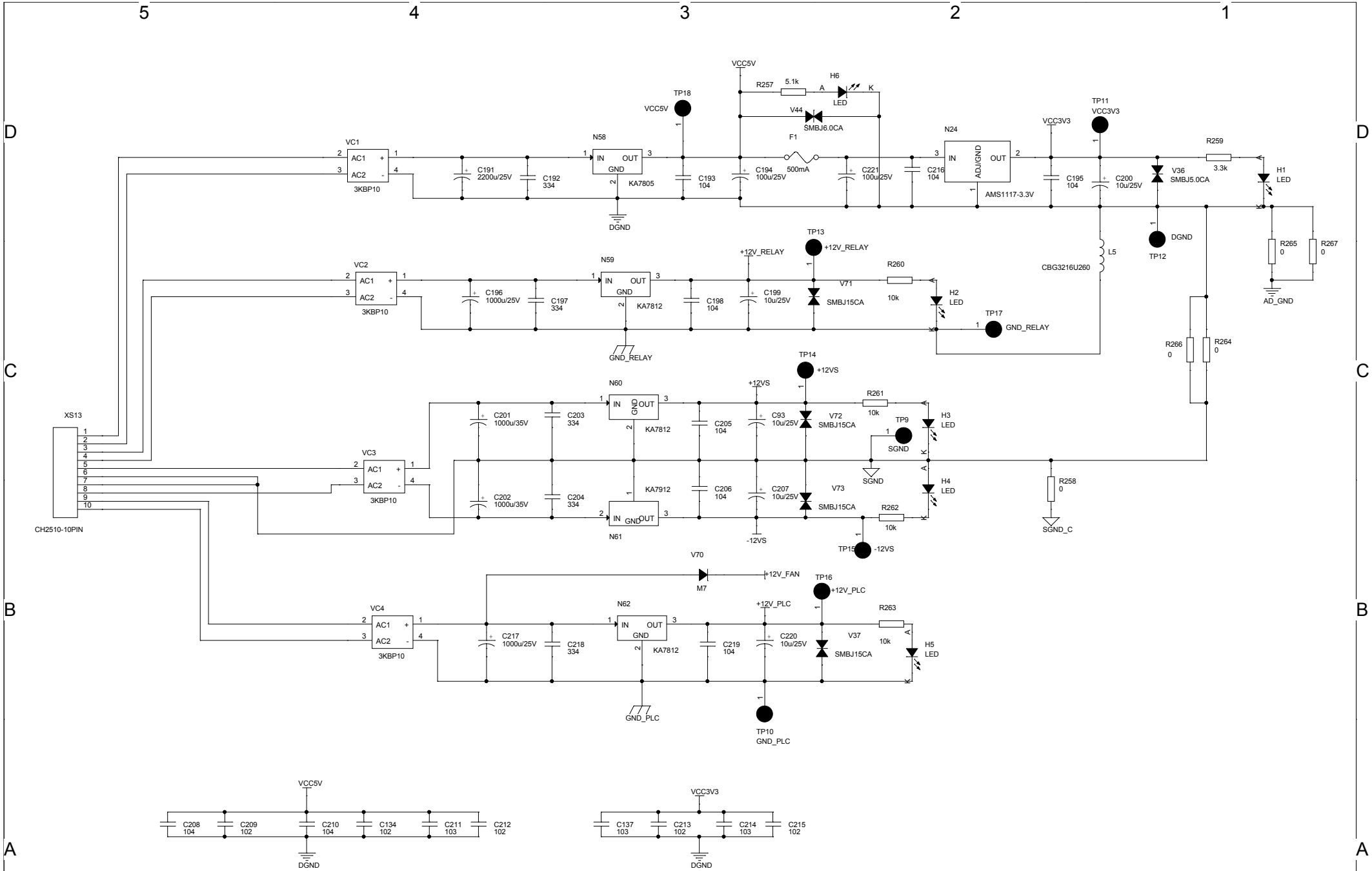

NANJING ChangSheng Instrument CO.,LTD

Title: CS99xxZ(7寸屏)综合测试仪 电源单元电路

Size: A3 | Document Number: <Doc> | Rev: 1.0

Date: Monday, June 23, 2014 | Sheet 8 of 17

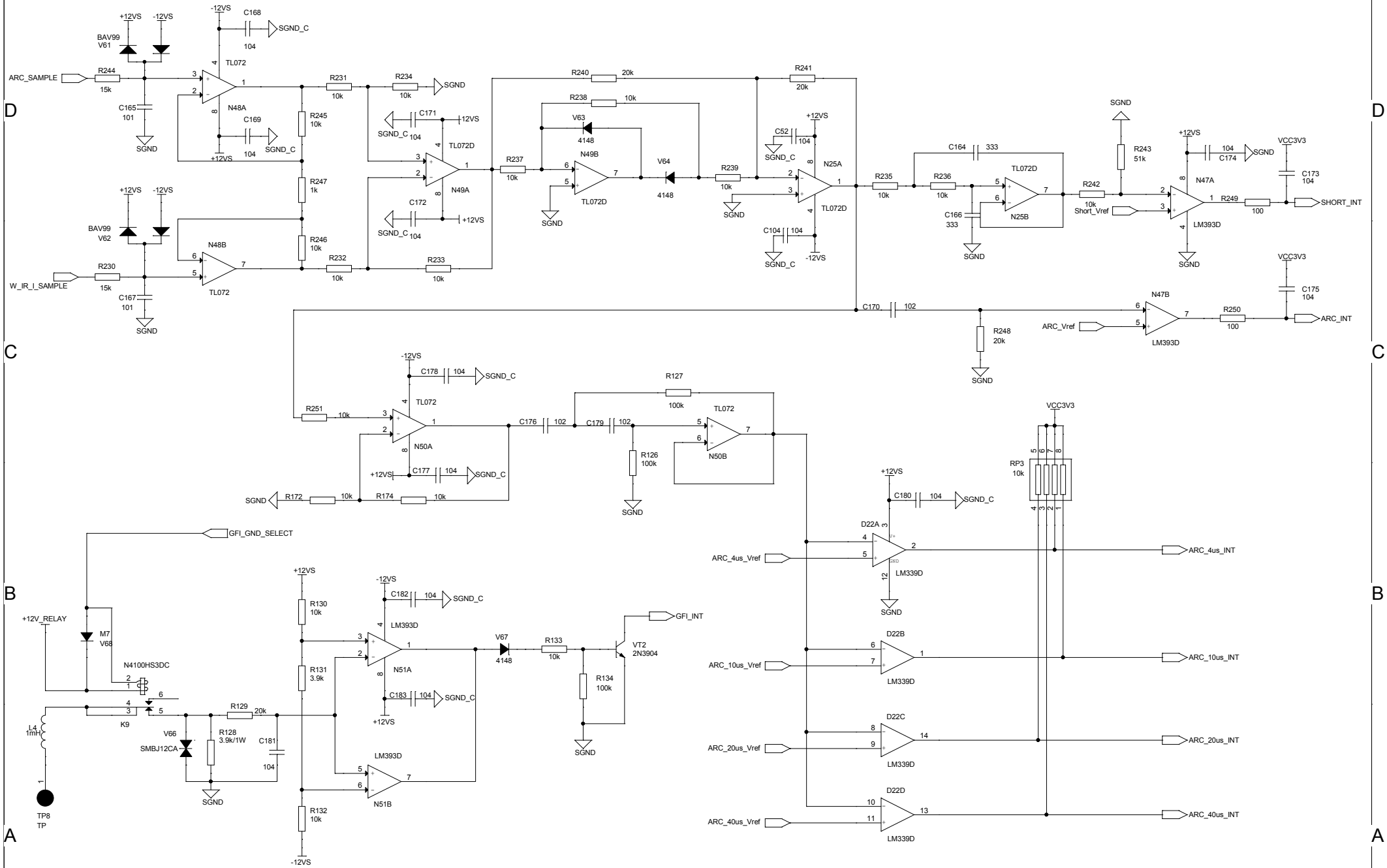

NANJING ChangSheng Instrument CO.,LTD	
Title	CS99xxZ(7寸屏)综合测试仪 短路、ARC、GFI保护单元电路
Size A3	Document Number <Doc> Rev 1.0
Date: Sunday, June 22, 2014	Sheet 9 of 17

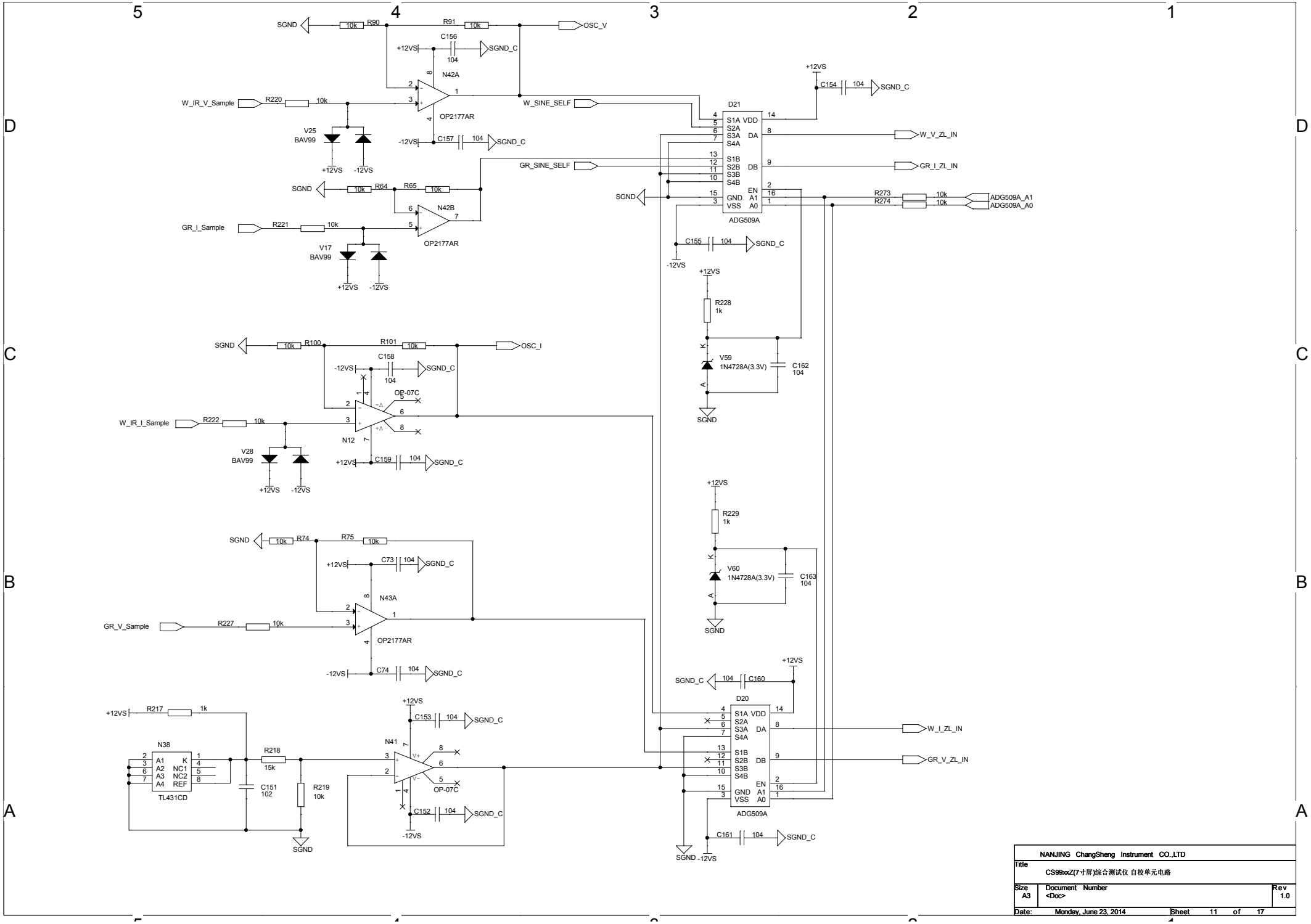
SGND
R90
10k
R91
10k
OSC_V
C156
104
+12VS
SGND_C
N42A
OP2177AR
W_IR_V_Sample
R220
10k
V25
BAV99
+12VS
-12VS
C157
104
W_SINE_SELF
GR_SINE_SELF
D21
S1A VDD
S2A
S3A DA
S4A
S1B
S2B DB
S3B
S4B
EN
GND A1
VSS A0
ADG509A
C154
104
W_V_ZL_IN
GR_I_ZL_IN
R273
R274
ADG509A_A1
ADG509A_A0
R64
R65
N42B
GR_I_Sample
R221
V17
BAV99
C155
R228
1k
V59
1N4728A(3.3V)
C162
R100
R101
OSC_I
C158
OP-07C
W_IR_I_Sample
R222
V28
BAV99
N12
C159
R229
1k
V60
1N4728A(3.3V)
C163
R74
R75
C73
N43A
GR_V_Sample
R227
C74
C160
D20
W_I_ZL_IN
GR_V_ZL_IN
R217
1k
N38
TL431CD
R218
15k
C151
102
R219
10k
N41
C153
C152
C161
NANJING ChangSheng Instrument CO.,LTD
Title
CS99xxZ(7寸屏)综合测试仪 自校单元电路
Size
A3
Document Number
<Doc>
Rev
1.0
Date: Monday, June 23, 2014
Sheet 11 of 17

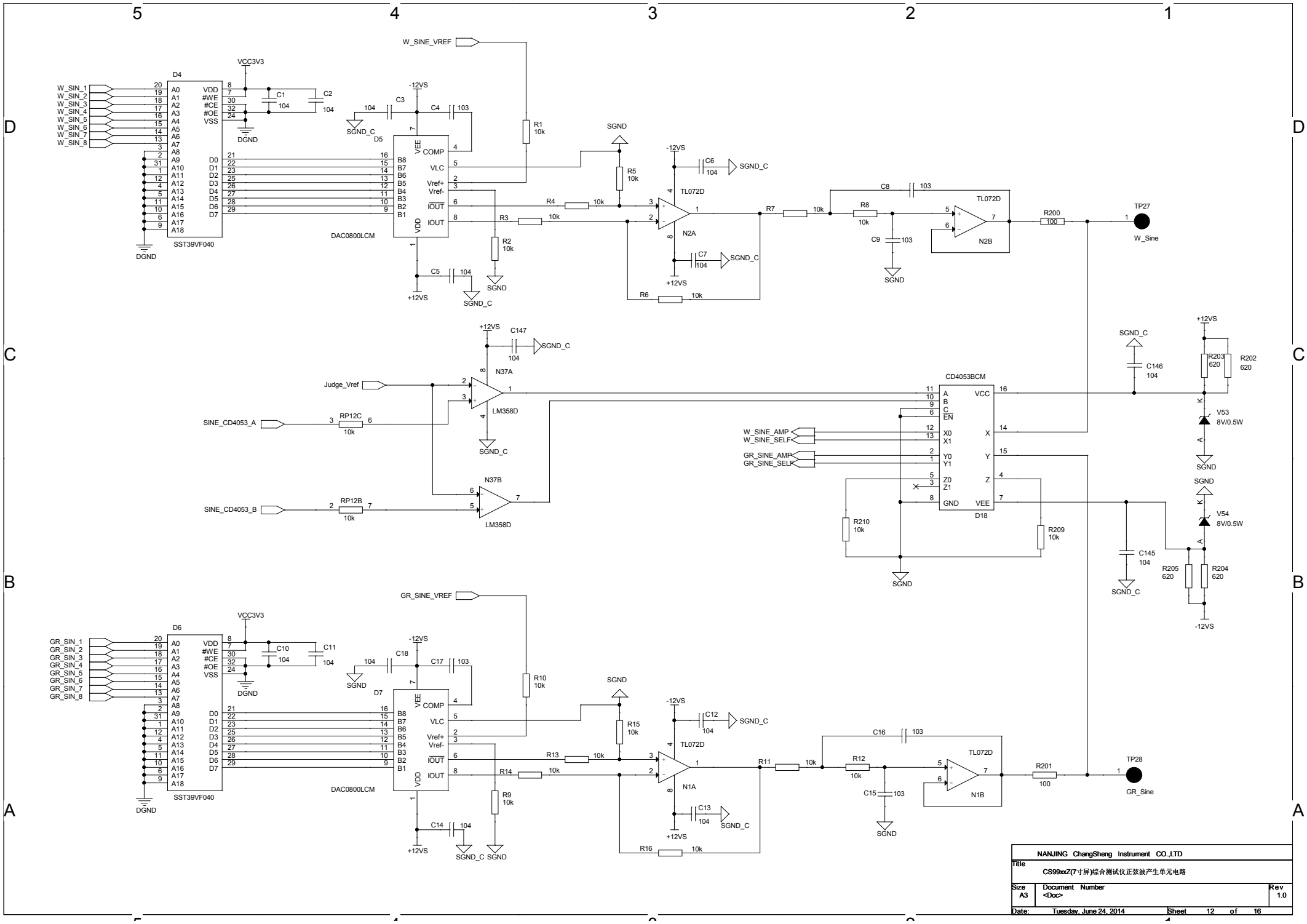
W_SINE_VREF
VCC3V3
D4
SST39VF040
DAC0800LCM
D5
TL072D
N2A
N2B
TP27
W_Sine
Judge_Vref
SINE_CD4053_A
SINE_CD4053_B
N37A
N37B
LM358D
CD4053BCM
D18
W_SINE_AMP
W_SINE_SELF
GR_SINE_AMP
GR_SINE_SELF
V53
8V/0.5W
V54
8V/0.5W
GR_SINE_VREF
D6
D7
N1A
N1B
TP28
GR_Sine
NANJING ChangSheng Instrument CO.,LTD
Title
CS99xxZ(7寸屏)综合测试仪正弦波产生单元电路
Size A3
Document Number
<Doc>
Rev 1.0
Date: Tuesday, June 24, 2014
Sheet 12 of 16

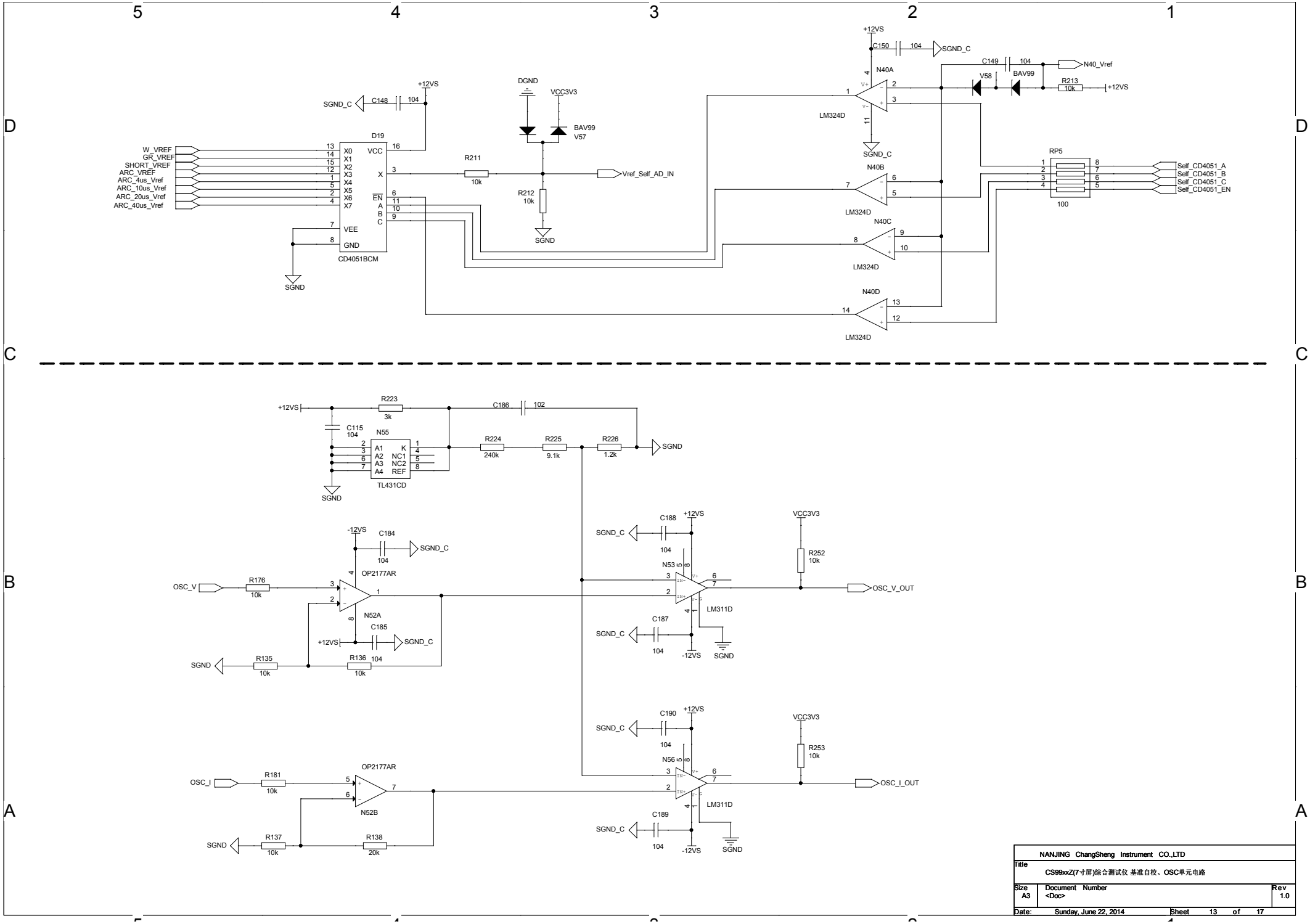

NANJING ChangSheng Instrument CO.,LTD	
Title	CS99xxZ(7寸屏)综合测试仪 基准自校、OSC单元电路
Size A3	Document Number <Doc>
Rev 1.0	
Date: Sunday, June 22, 2014	Sheet 13 of 17

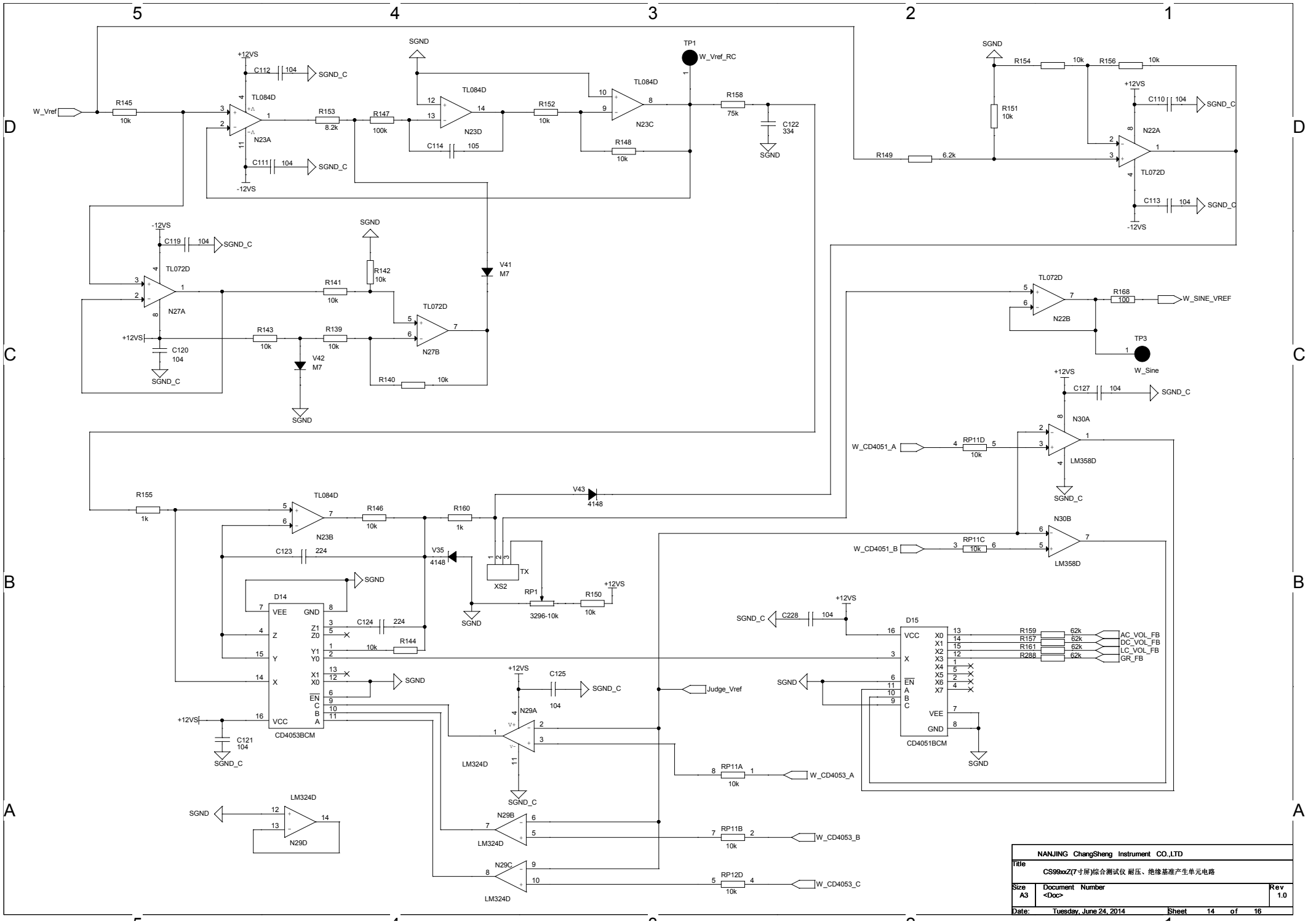

NANJING ChangSheng Instrument CO.,LTD		
Title	CS99xxZ(7寸屏)综合测试仪 耐压、绝缘基准产生单元电路	
Size A3	Document Number <Doc>	Rev 1.0
Date: Tuesday, June 24, 2014	Sheet 14 of 16	

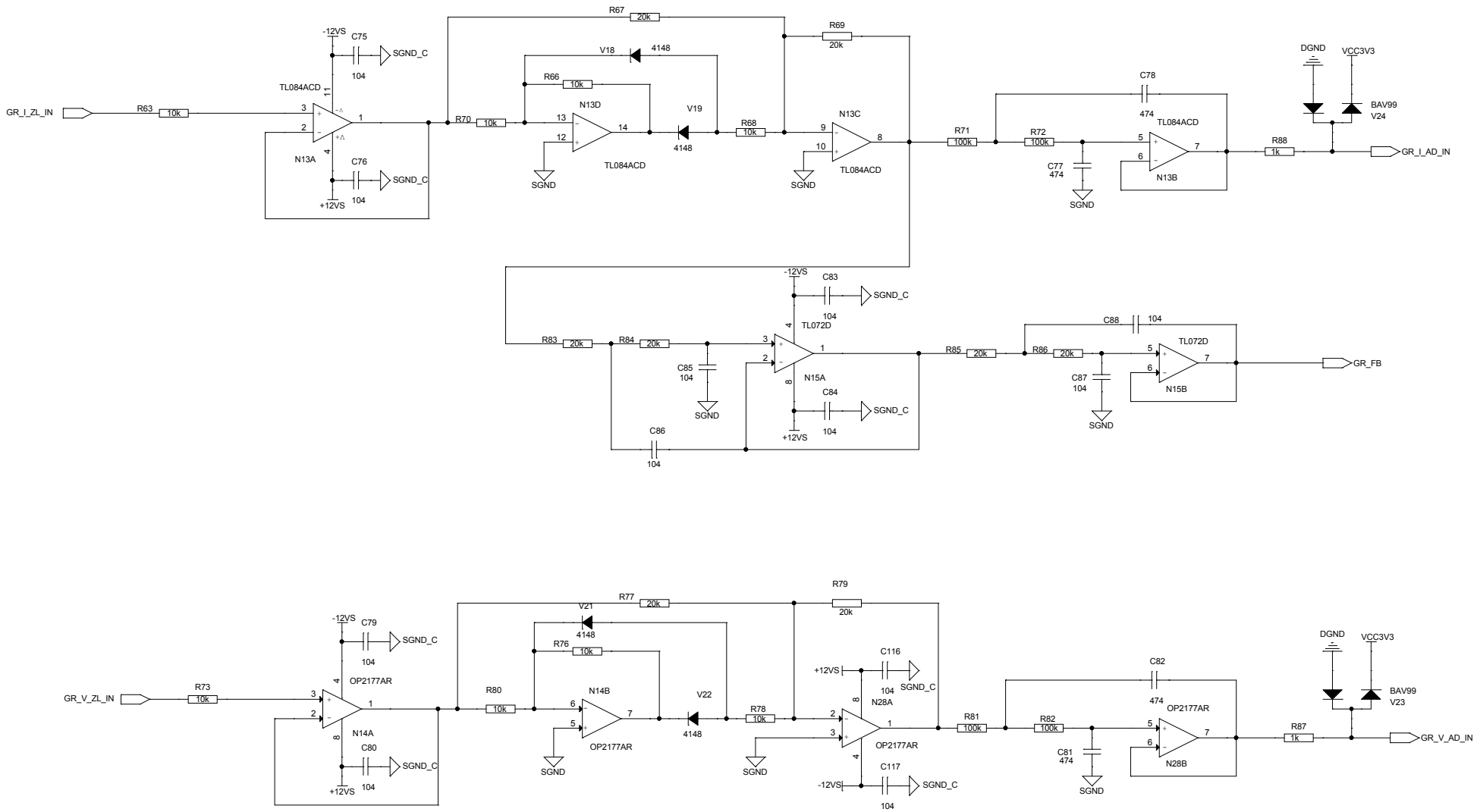

NANJING ChangSheng Instrument CO.,LTD	
Title	CS99xxZ(7寸屏)综合测试仪接地测试整流单元电路
Size A3	Document Number <Doc> Rev 1.0
Date: Friday, June 20, 2014	Sheet 15 of 17

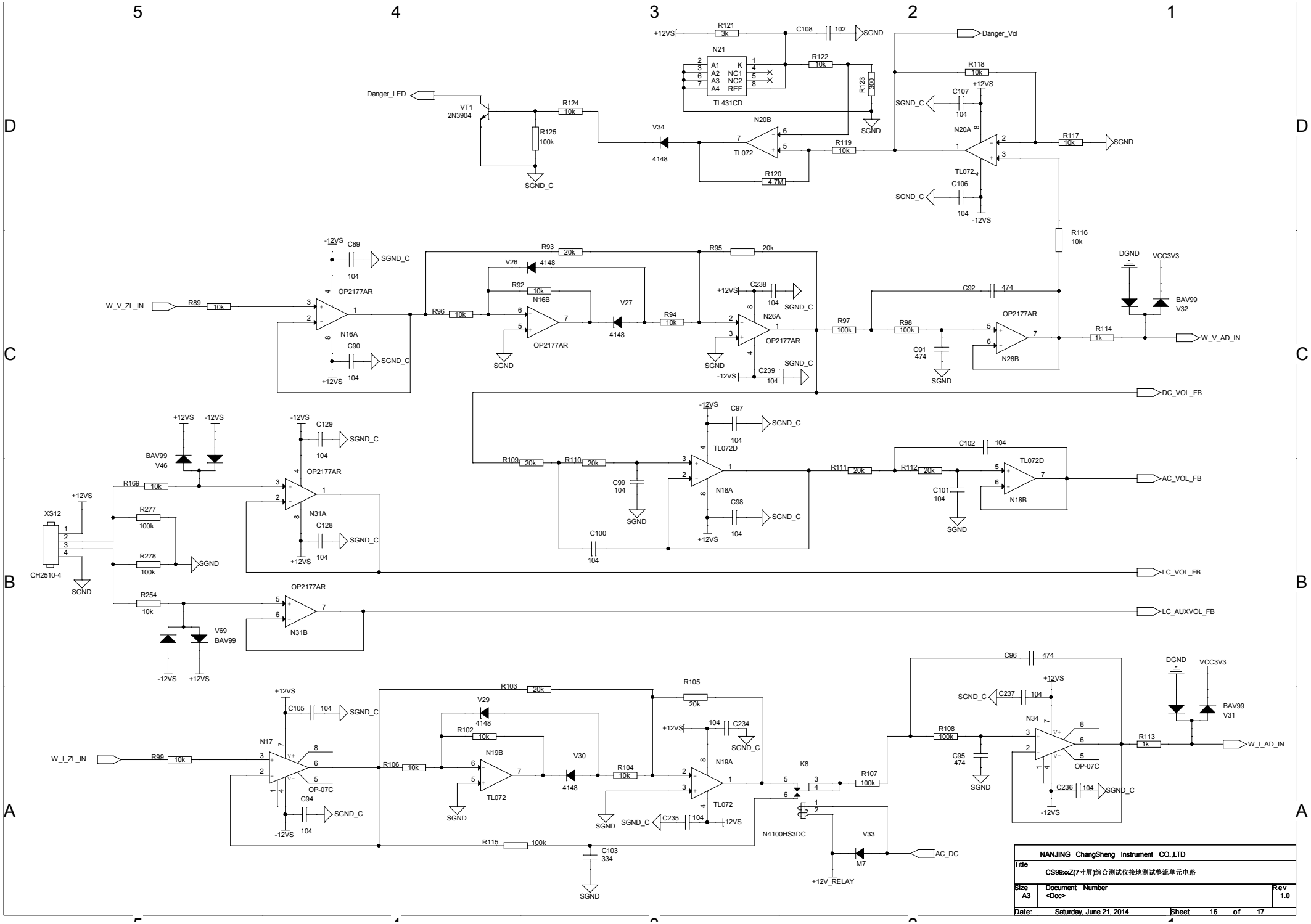
Danger_LED
VT1
2N3904
R124
10k
R125
100k
SGND_C
V34
4148
N21
TL431CD
R121
3k
R122
10k
R123
300
C108
102
SGND
N20B
TL072
R119
10k
R120
4.7M
Danger_Vol
R118
10k
C107
104
N20A
TL072
R117
10k
C106
104
-12VS
+12VS
R116
10k
W_V_ZL_IN
R89
10k
N16A
OP2177AR
C89
104
C90
104
R93
20k
R95
20k
V26
4148
R92
10k
N16B
V27
R96
10k
R94
10k
C238
104
N26A
C239
104
R97
100k
R98
100k
C91
474
C92
474
N26B
R114
1k
DGND
VCC3V3
BAV99
V32
W_V_AD_IN
DC_VOL_FB
BAV99
V46
R169
10k
XS12
CH2510-4
R277
100k
R278
100k
R254
10k
V69
BAV99
N31A
C129
104
C128
104
N31B
C97
104
TL072D
R109
20k
R110
20k
C99
104
C100
104
N18A
C98
104
R111
20k
R112
20k
C102
104
C101
104
N18B
AC_VOL_FB
LC_VOL_FB
LC_AUXVOL_FB
W_I_ZL_IN
R99
10k
N17
OP-07C
C105
104
C94
104
R103
20k
R105
20k
V29
4148
R102
10k
N19B
TL072
V30
R106
10k
R104
10k
C234
104
N19A
C235
104
K8
N4100HS3DC
R107
100k
R115
100k
C103
334
V33
M7
+12V_RELAY
AC_DC
C96
474
C237
104
N34
OP-07C
R108
100k
C95
474
C236
104
R113
1k
BAV99
V31
W_I_AD_IN
NANJING ChangSheng Instrument CO.,LTD
Title
CS99xxZ(7寸屏)综合测试仪接地测试整流单元电路
Size
A3
Document Number
<Doc>
Rev
1.0
Date: Saturday, June 21, 2014
Sheet 16 of 17

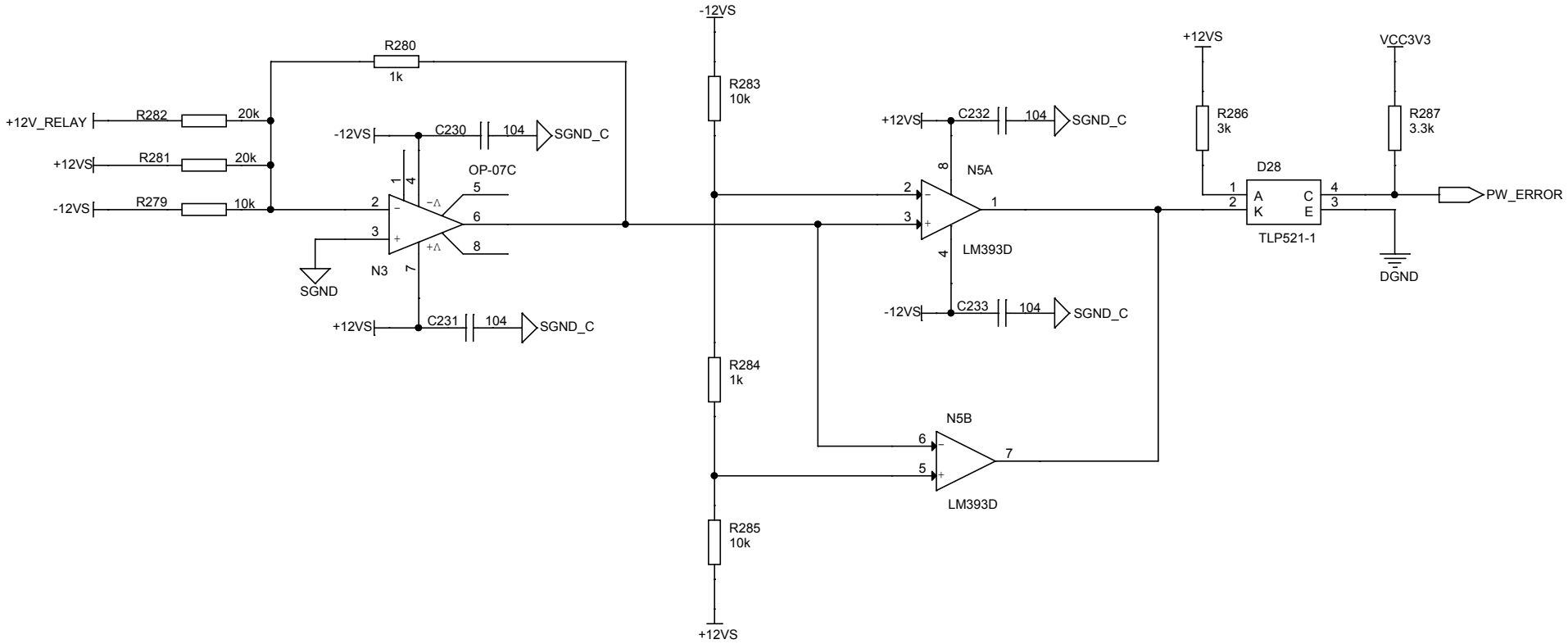

NANJING ChangSheng Instrument CO.,LTD		
Title CS99xxZ(7寸屏)综合测试仪 电源保护单元电路		
Size A4	Document Number <Doc>	Rev 1.0
Date: Friday, June 20, 2014	Sheet 17 of 17	