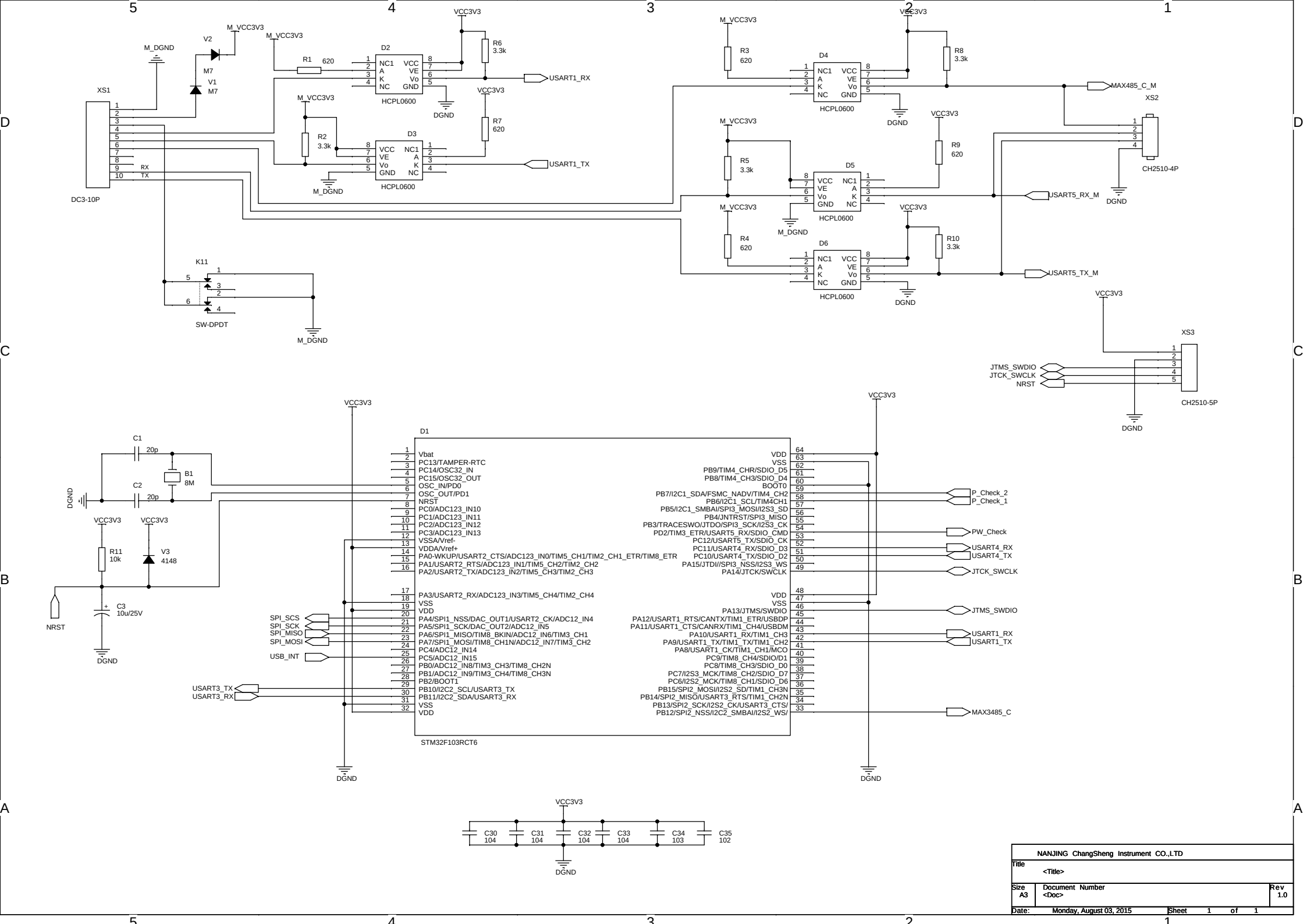
XS1
DC3-10P
RX
TX
M_DGND
V2
M7
V1
M7
M_VCC3V3
R1 620
D2
HCPL0600
R6 3.3k
VCC3V3
USART1_RX
DGND
R7 620
R2 3.3k
D3
HCPL0600
USART1_TX
K11
SW-DPDT
R3 620
D4
HCPL0600
R8 3.3k
MAX485_C_M
XS2
CH2510-4P
R5 3.3k
D5
HCPL0600
R9 620
USART5_RX_M
R4 620
D6
HCPL0600
R10 3.3k
USART5_TX_M
XS3
CH2510-5P
JTMS_SWDIO
JTCK_SWCLK
NRST
C1 20p
C2 20p
B1 8M
R11 10k
V3 4148
C3 10u/25V
D1
STM32F103RCT6
Vbat
PC13/TAMPER-RTC
PC14/OSC32_IN
PC15/OSC32_OUT
OSC_IN/PD0
OSC_OUT/PD1
NRST
PC0/ADC123_IN10
PC1/ADC123_IN11
PC2/ADC123_IN12
PC3/ADC123_IN13
VSSA/Vref-
VDDA/Vref+
PA0-WKUP/USART2_CTS/ADC123_IN0/TIM5_CH1/TIM2_CH1_ETR/TIM8_ETR
PA1/USART2_RTS/ADC123_IN1/TIM5_CH2/TIM2_CH2
PA2/USART2_TX/ADC123_IN2/TIM5_CH3/TIM2_CH3
PA3/USART2_RX/ADC123_IN3/TIM5_CH4/TIM2_CH4
VSS
VDD
PA4/SPI1_NSS/DAC_OUT1/USART2_CK/ADC12_IN4
PA5/SPI1_SCK/DAC_OUT2/ADC12_IN5
PA6/SPI1_MISO/TIM8_BKIN/ADC12_IN6/TIM3_CH1
PA7/SPI1_MOSI/TIM8_CH1N/ADC12_IN7/TIM3_CH2
PC4/ADC12_IN14
PC5/ADC12_IN15
PB0/ADC12_IN8/TIM3_CH3/TIM8_CH2N
PB1/ADC12_IN9/TIM3_CH4/TIM8_CH3N
PB2/BOOT1
PB10/I2C2_SCL/USART3_TX
PB11/I2C2_SDA/USART3_RX
VSS
VDD
VDD
VSS
PB9/TIM4_CHR/SDIO_D5
PB8/TIM4_CH3/SDIO_D4
BOOT0
PB7/I2C1_SDA/FSMC_NADV/TIM4_CH2
PB6/I2C1_SCL/TIM4CH1
PB5/I2C1_SMBAI/SPI3_MOSI/I2S3_SD
PB4/JNTRST/SPI3_MISO
PB3/TRACESWO/JTDO/SPI3_SCK/I2S3_CK
PD2/TIM3_ETR/USART5_RX/SDIO_CMD
PC12/USART5_TX/SDIO_CK
PC11/USART4_RX/SDIO_D3
PC10/USART4_TX/SDIO_D2
PA15/JTDI//SPI3_NSS/I2S3_WS
PA14/JTCK/SWCLK
VDD
VSS
PA13/JTMS/SWDIO
PA12/USART1_RTS/CANTX/TIM1_ETR/USBDP
PA11/USART1_CTS/CANRX/TIM1_CH4/USBDM
PA10/USART1_RX/TIM1_CH3
PA9/USART1_TX/TIM1_TX/TIM1_CH2
PA8/USART1_CK/TIM1_CH1/MCO
PC9/TIM8_CH4/SDIO/D1
PC8/TIM8_CH3/SDIO_D0
PC7/I2S3_MCK/TIM8_CH2/SDIO_D7
PC6/I2S2_MCK/TIM8_CH1/SDIO_D6
PB15/SPI2_MOSI/I2S2_SD/TIM1_CH3N
PB14/SPI2_MISO/USART3_RTS/TIM1_CH2N
PB13/SPI2_SCK/I2S2_CK/USART3_CTS/
PB12/SPI2_NSS/I2C2_SMBAI/I2S2_WS/
P_Check_2
P_Check_1
PW_Check
USART4_RX
USART4_TX
JTCK_SWCLK
JTMS_SWDIO
USART1_RX
USART1_TX
MAX3485_C
SPI_SCS
SPI_SCK
SPI_MISO
SPI_MOSI
USB_INT
USART3_TX
USART3_RX
C30 104
C31 104
C32 104
C33 104
C34 103
C35 102
NANJING ChangSheng Instrument CO.,LTD
Title
<Title>
Size A3
Document Number
<Doc>
Rev 1.0
Date: Monday, August 03, 2015
Sheet 1 of 1

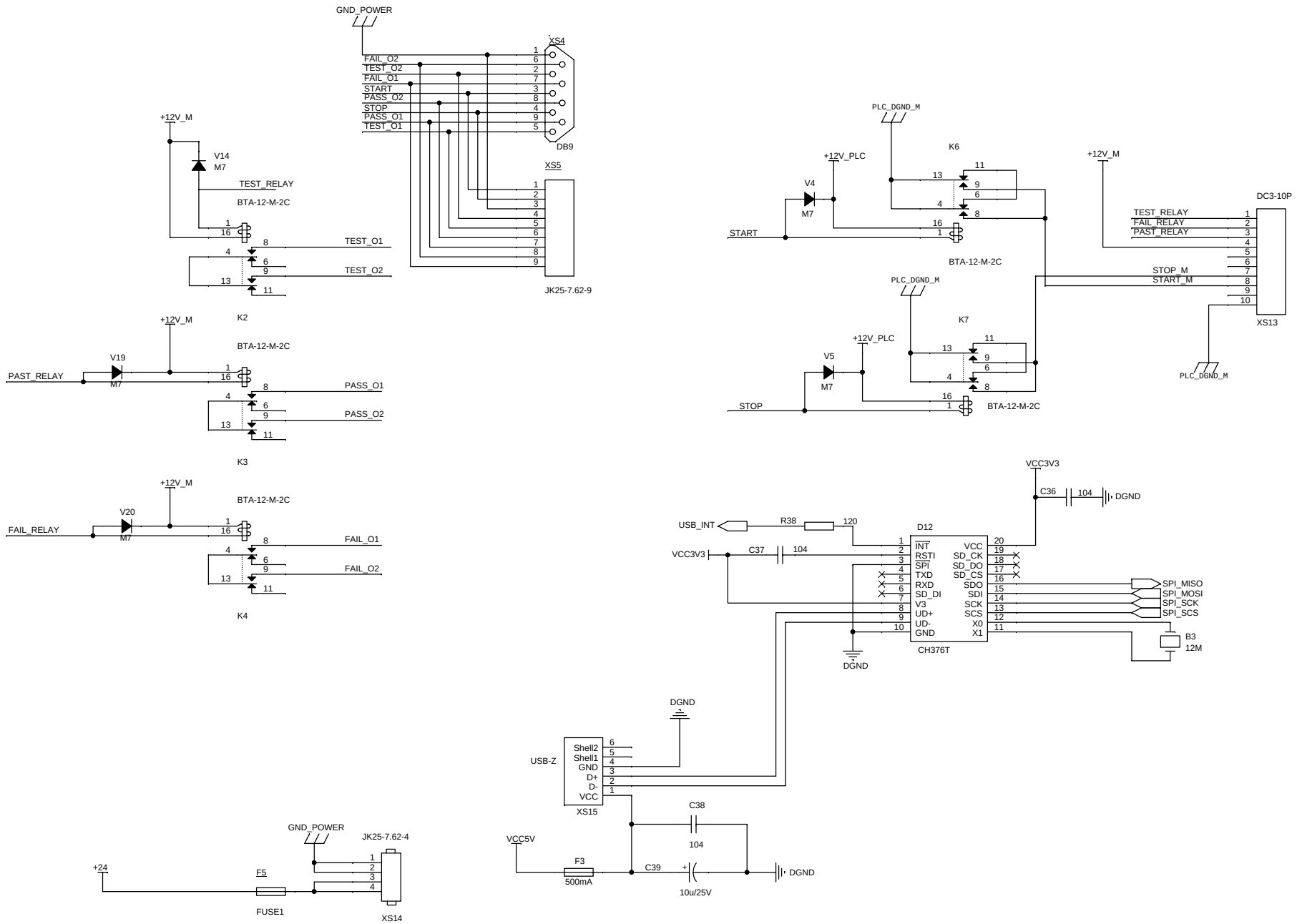

NANJING ChangSheng Instrument CO.,LTD	
Title <Title>	
Size A3	Document Number <Doc>
Rev 1.0	
Date: Monday, August 03, 2015	Sheet 1 of 1

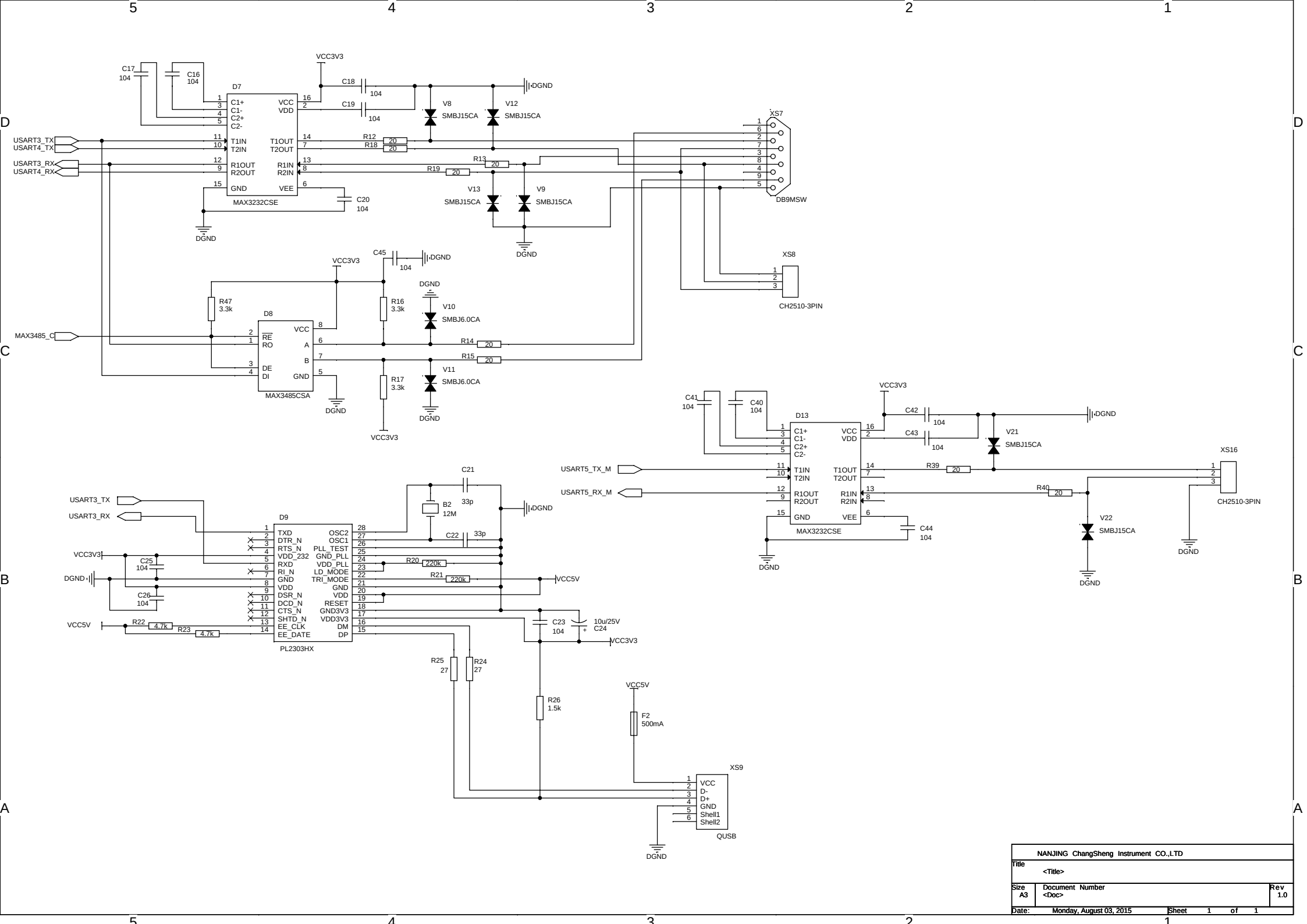

NANJING ChangSheng Instrument CO.,LTD	
Title <Title>	
Size A3	Document Number <Doc>
Rev 1.0	
Date: Monday, August 03, 2015	Sheet 1 of 1

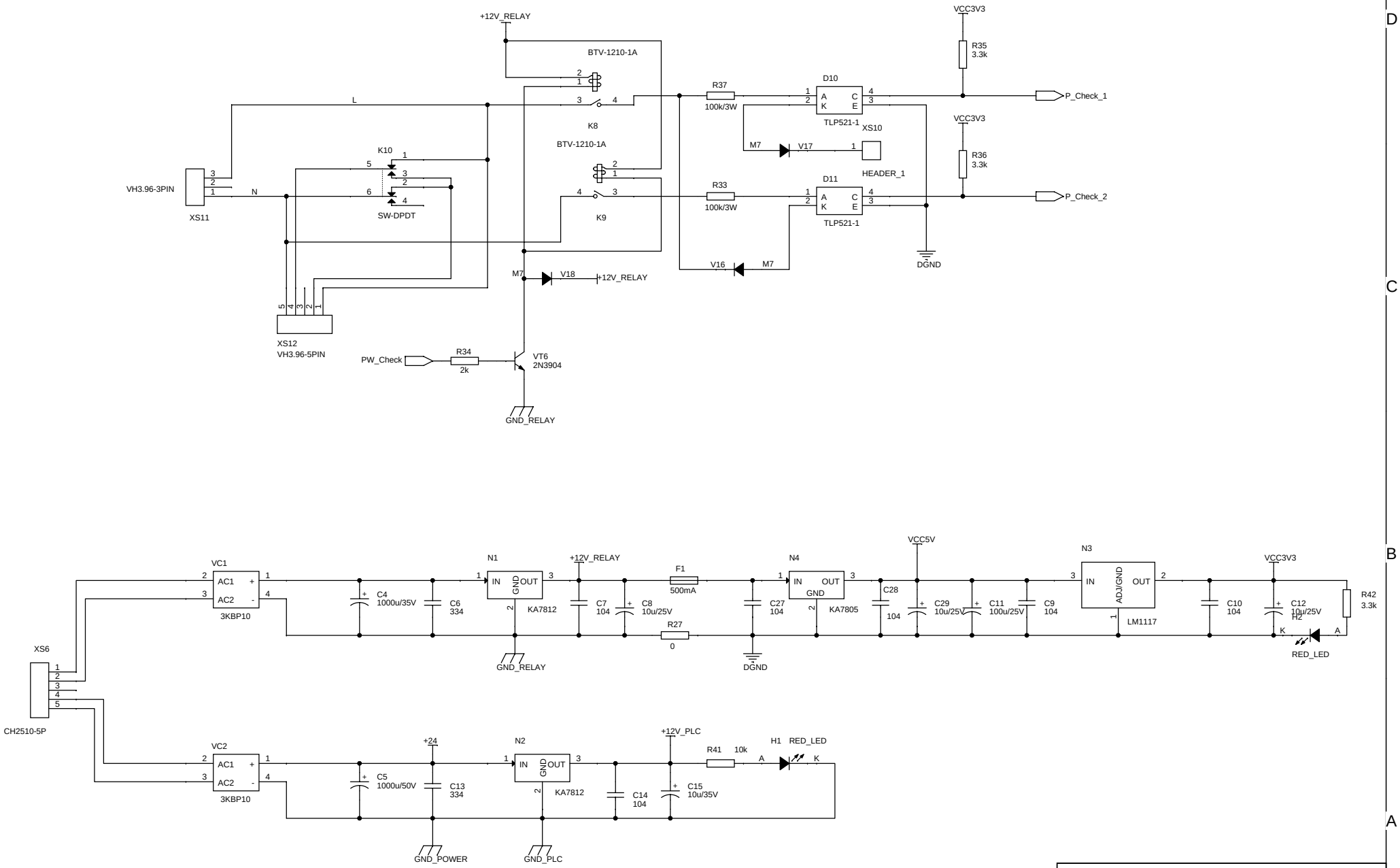

NANJING ChangSheng Instrument CO.,LTD		
Title <Title>		
Size A3	Document Number <Doc>	Rev 1.0
Date: Monday, August 03, 2015	Sheet 1 of 1	