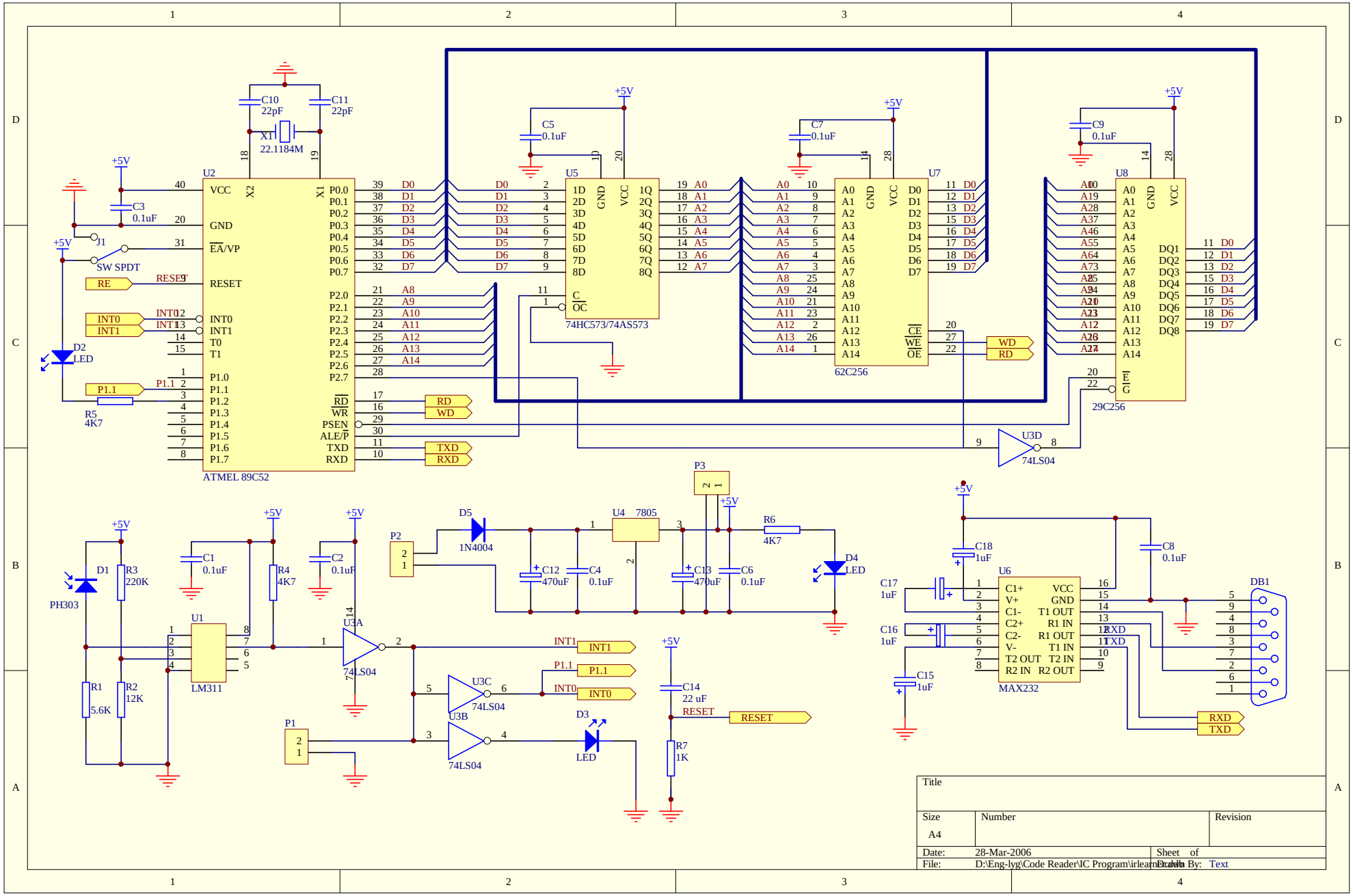

Title		
Size A4	Number	Revision
Date: 28-Mar-2006		Sheet of
File: D:\Eng-lyg\Code Reader\IC Program\irleamcode.dwb		Drawn By: Text