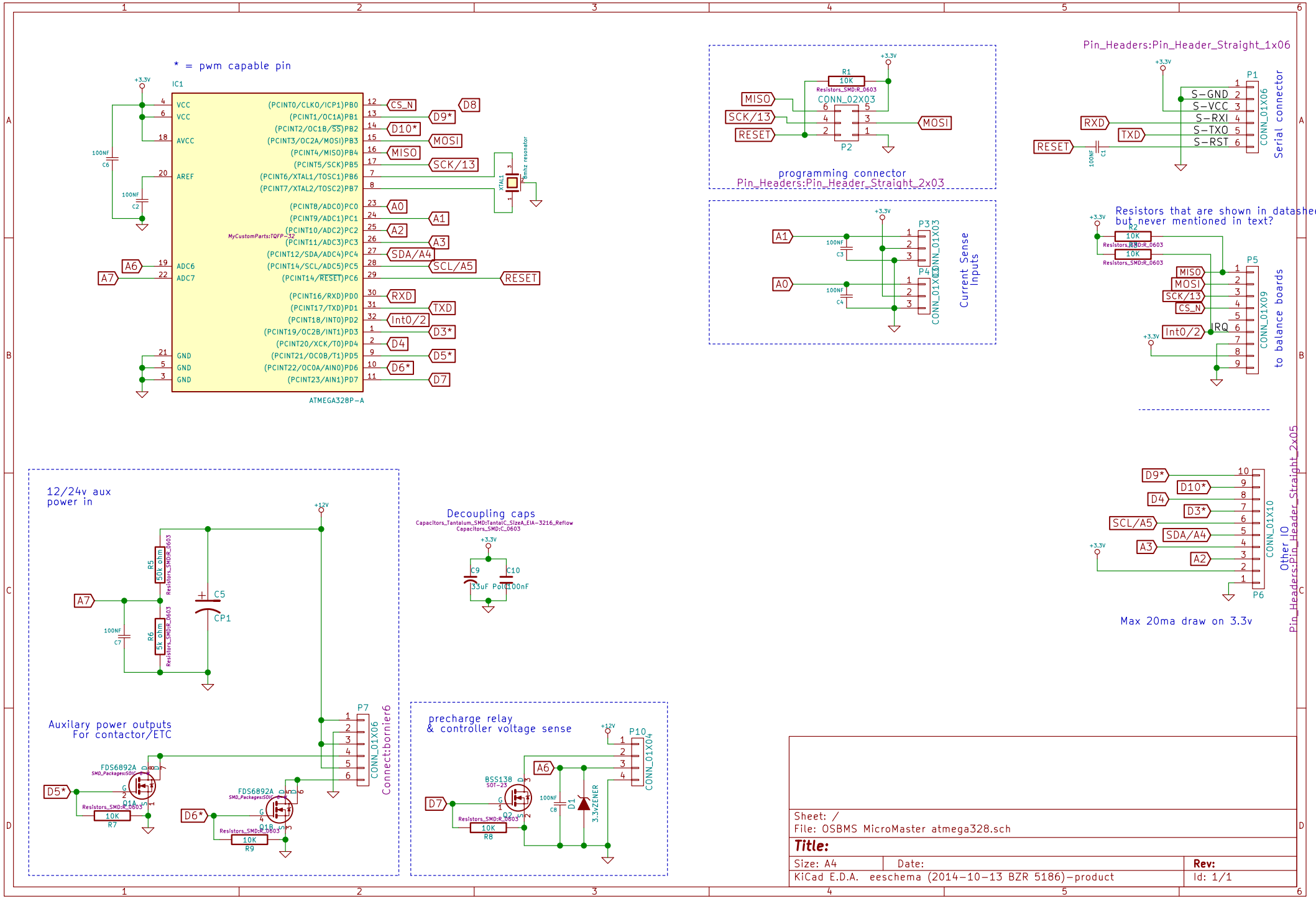
* = pwm capable pin
IC1
ATMEGA328P-A
MyCustomParts:TQFP-32
programming connector
Pin_Headers:Pin_Header_Straight_2x03
Pin_Headers:Pin_Header_Straight_1x06
Serial connector
Current Sense Inputs
Resistors that are shown in datasheet but never mentioned in text?
to balance boards
Other IO
Pin_Headers:Pin_Header_Straight_2x05
Max 20ma draw on 3.3v
12/24v aux power in
Decoupling caps
Auxilary power outputs For contactor/ETC
precharge relay & controller voltage sense
Sheet: /
File: OSBMS MicroMaster atmega328.sch
Title:
Size: A4
Date:
Rev:
KiCad E.D.A. eeschema (2014-10-13 BZR 5186)-product
Id: 1/1
MyCustomParts:Connector_SMD_GH_SIDECONN_1X9_1.25MM_45515711ND