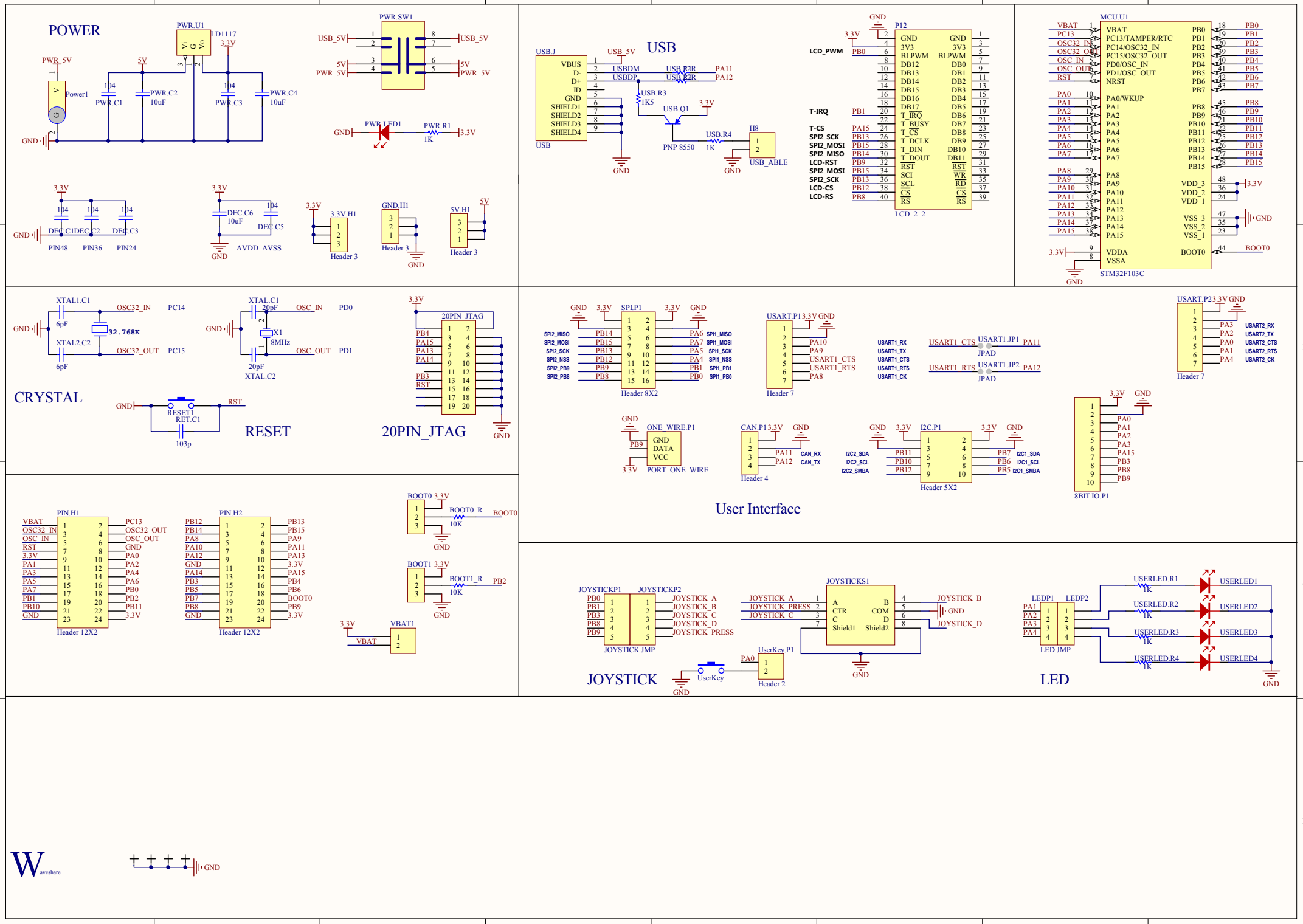
POWER
PWR.U1
LD1117
3.3V
PWR_5V
5V
Power1
PWR.C1
PWR.C2
10uF
PWR.C3
PWR.C4
10uF
GND
PWR.SW1
USB_5V
PWR.LED1
PWR.R1
1K
DEC.C1
DEC.C2
DEC.C3
PIN48
PIN36
PIN24
DEC.C6
10uF
DEC.C5
AVDD_AVSS
3.3V.H1
Header 3
GND.H1
5V.H1
USB
USB.J
VBUS
D-
D+
ID
GND
SHIELD1
SHIELD2
SHIELD3
SHIELD4
USB_5V
USBDM
USBDP
USB.R2
USB.R3
1K5
USB.Q1
PNP 8550
USB.R4
1K
H8
USB_ABLE
P12
LCD_2_2
LCD_PWM
T-IRQ
T-CS
SPI2_SCK
SPI2_MOSI
SPI2_MISO
LCD-RST
SPI2_MOSI
SPI2_SCK
LCD-CS
LCD-RS
MCU.U1
STM32F103C
VBAT
PC13
OSC32_IN
OSC32_OUT
OSC_IN
OSC_OUT
RST
PA0
PA1
PA2
PA3
PA4
PA5
PA6
PA7
PA8
PA9
PA10
PA11
PA12
PA13
PA14
PA15
VDDA
VSSA
PB0
PB1
PB2
PB3
PB4
PB5
PB6
PB7
PB8
PB9
PB10
PB11
PB12
PB13
PB14
PB15
VDD_3
VDD_2
VDD_1
VSS_3
VSS_2
VSS_1
BOOT0
CRYSTAL
XTAL1.C1
XTAL2.C2
6pF
32.768K
XTAL.C1
20pF
X1
8MHz
XTAL.C2
RESET
RESET1
RET.C1
103p
20PIN_JTAG
PIN.H1
Header 12X2
PIN.H2
BOOT0_R
10K
BOOT1
BOOT1_R
VBAT1
User Interface
SPI1.P1
Header 8X2
SPI2_MISO
SPI2_MOSI
SPI2_SCK
SPI2_NSS
SPI2_PB9
SPI2_PB8
SPI1_MISO
SPI1_MOSI
SPI1_SCK
SPI1_NSS
SPI1_PB1
SPI1_PB0
USART.P1
Header 7
USART1_RX
USART1_TX
USART1_CTS
USART1_RTS
USART1_CK
USART1_JP1
USART1_JP2
JPAD
USART.P2
USART2_RX
USART2_TX
USART2_CTS
USART2_RTS
USART2_CK
ONE_WIRE.P1
GND
DATA
VCC
PORT_ONE_WIRE
CAN.P1
Header 4
CAN_RX
CAN_TX
I2C.P1
Header 5X2
I2C2_SDA
I2C2_SCL
I2C2_SMBA
I2C1_SDA
I2C1_SCL
I2C1_SMBA
8BIT IO.P1
JOYSTICK
JOYSTICKP1
JOYSTICKP2
JOYSTICK JMP
JOYSTICK_A
JOYSTICK_B
JOYSTICK_C
JOYSTICK_D
JOYSTICK_PRESS
JOYSTICKS1
Shield1
Shield2
UserKey.P1
UserKey
Header 2
LED
LEDP1
LEDP2
LED JMP
USERLED.R1
USERLED.R2
USERLED.R3
USERLED.R4
USERLED1
USERLED2
USERLED3
USERLED4
Waveshare