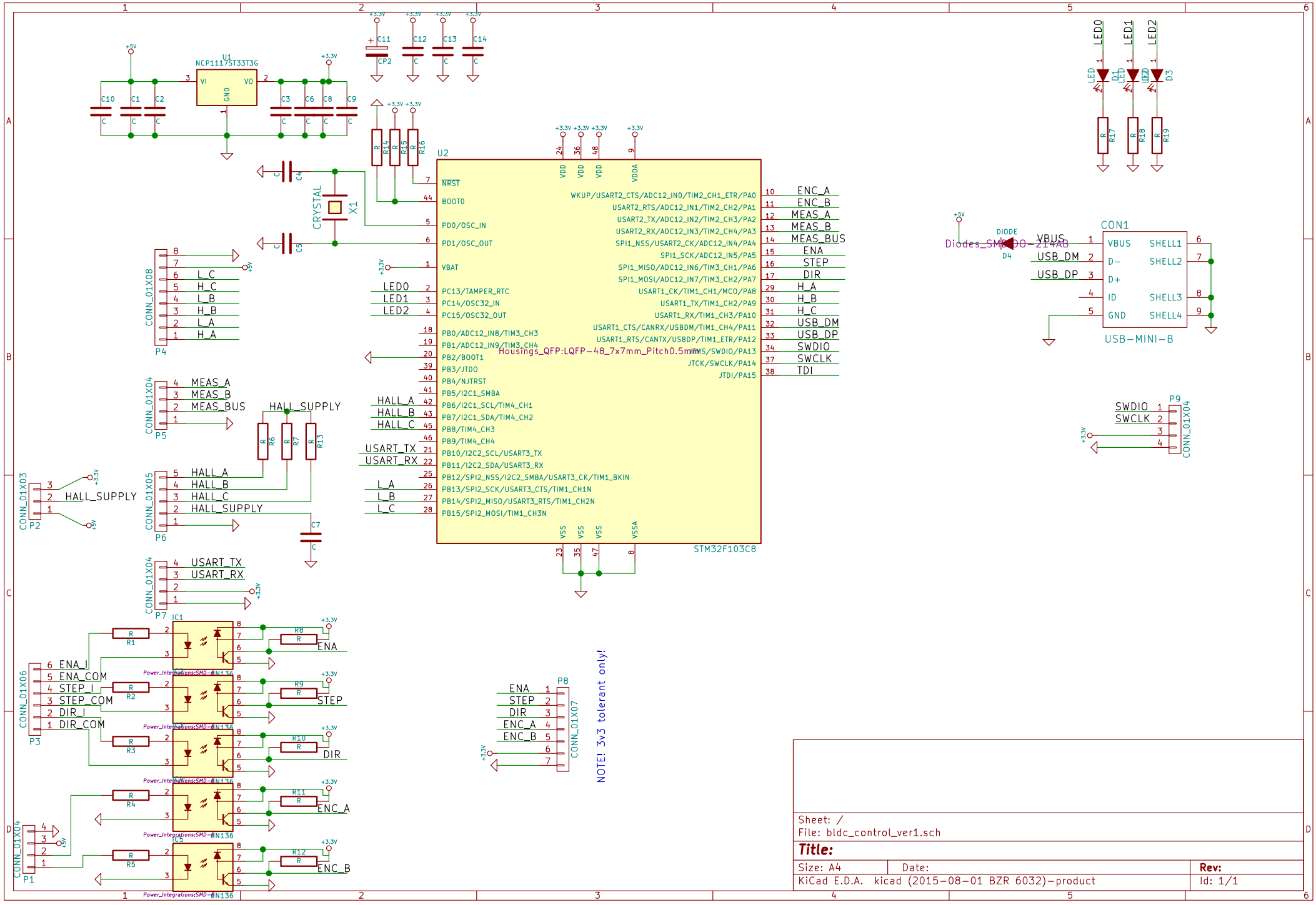

Sheet: /
File: bldc_control_ver1.sch

Title:

Size: A4	Date:	Rev:
KiCad E.D.A. kicad (2015-08-01 BZR 6032)-product		Id: 1/1