POWER

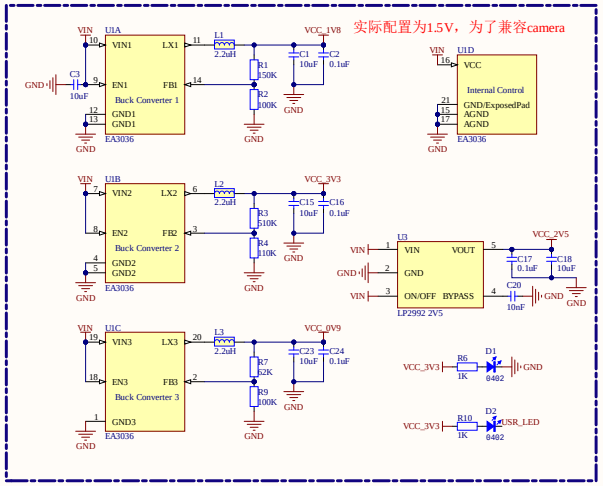

ISP

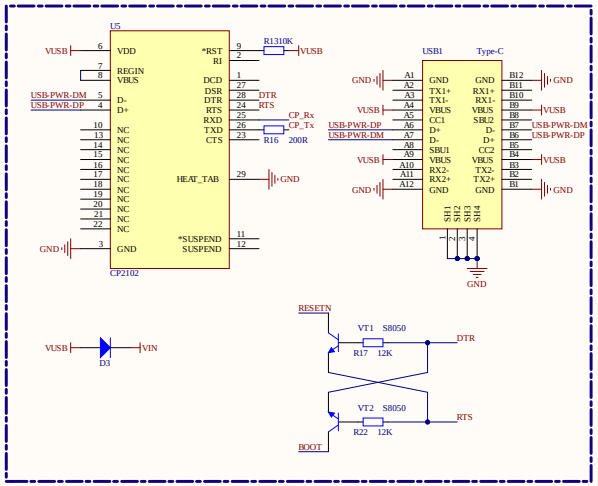

TF-CARD

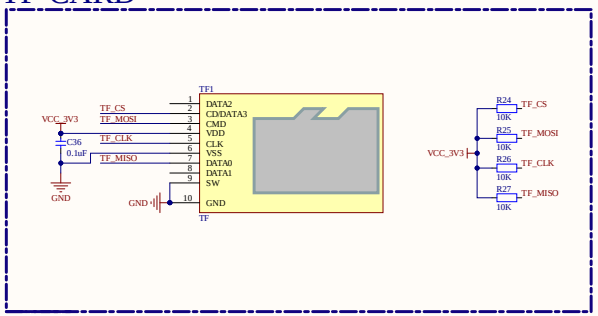

CORE

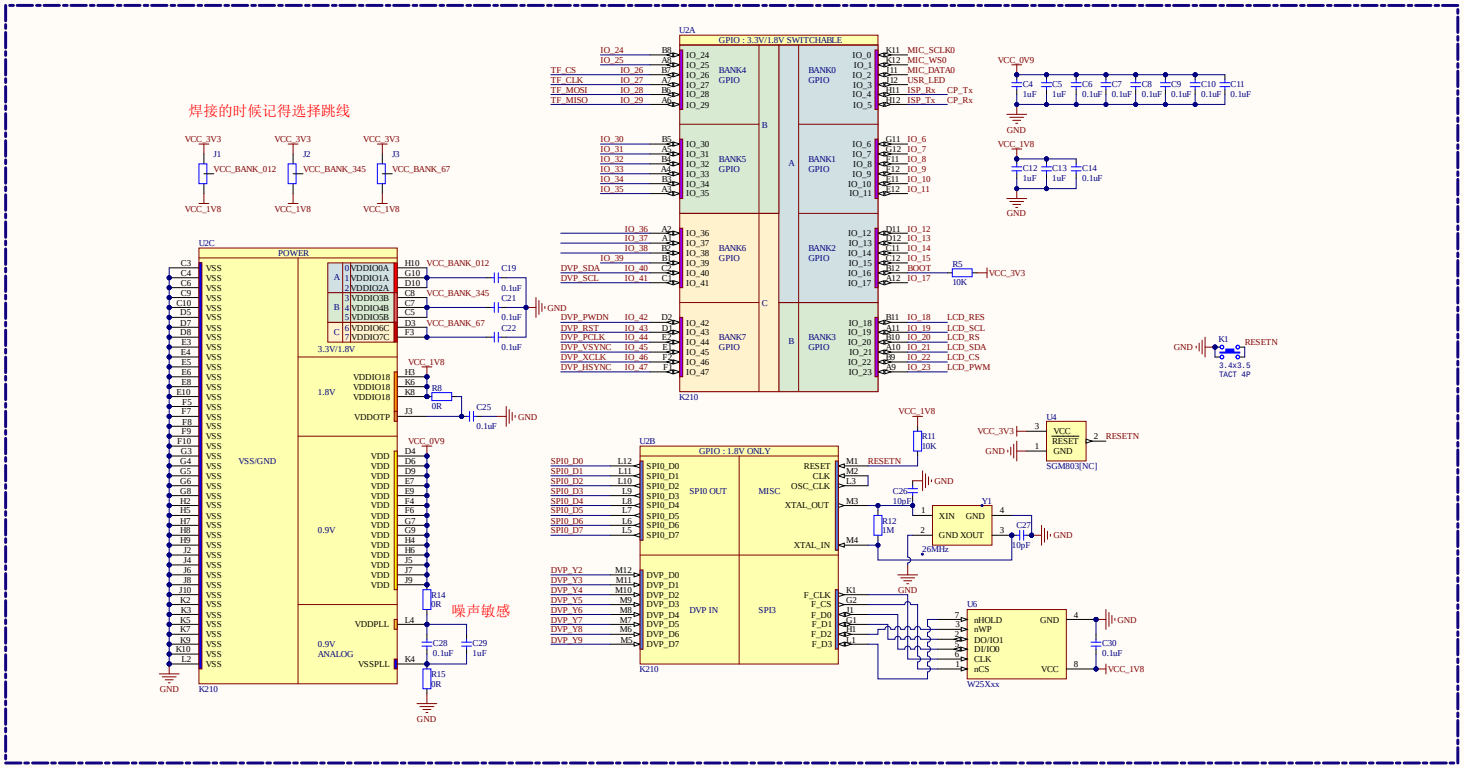

LCD

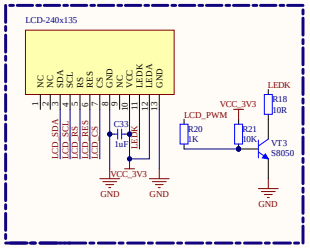

MIC

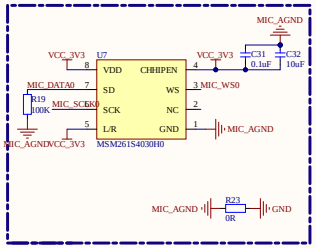

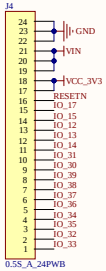

CAMERA

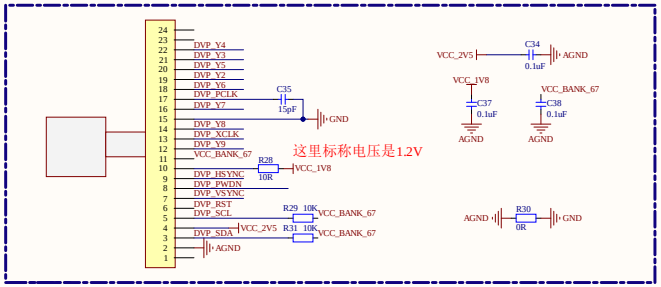

Created by 稚晖

知乎@ 稚晖

Bilibili@ 稚晖君

Title		
Size A2	Number	Revision
Date: 12 26 2019		Sheet of
File: C:\Users\...\Sheet1.SchDoc		Drawn By: