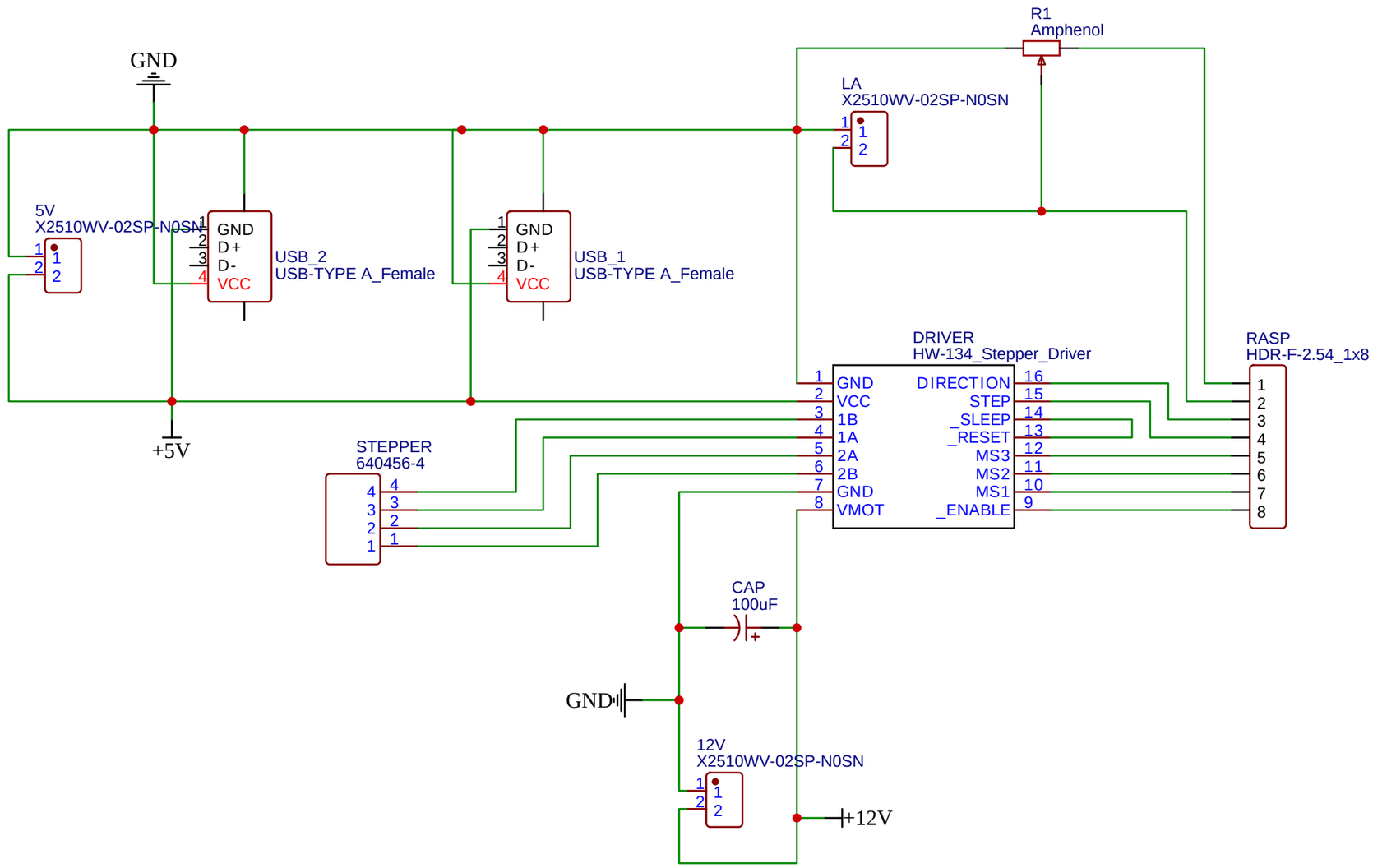

TITLE: Sid circuitry schematic		REV: 2.0
EasyEDA	Company: ECAM 4MIN	Sheet: 1/1
	Date: 2022-02-09 Drawn By: SAMELSON Nicolas	