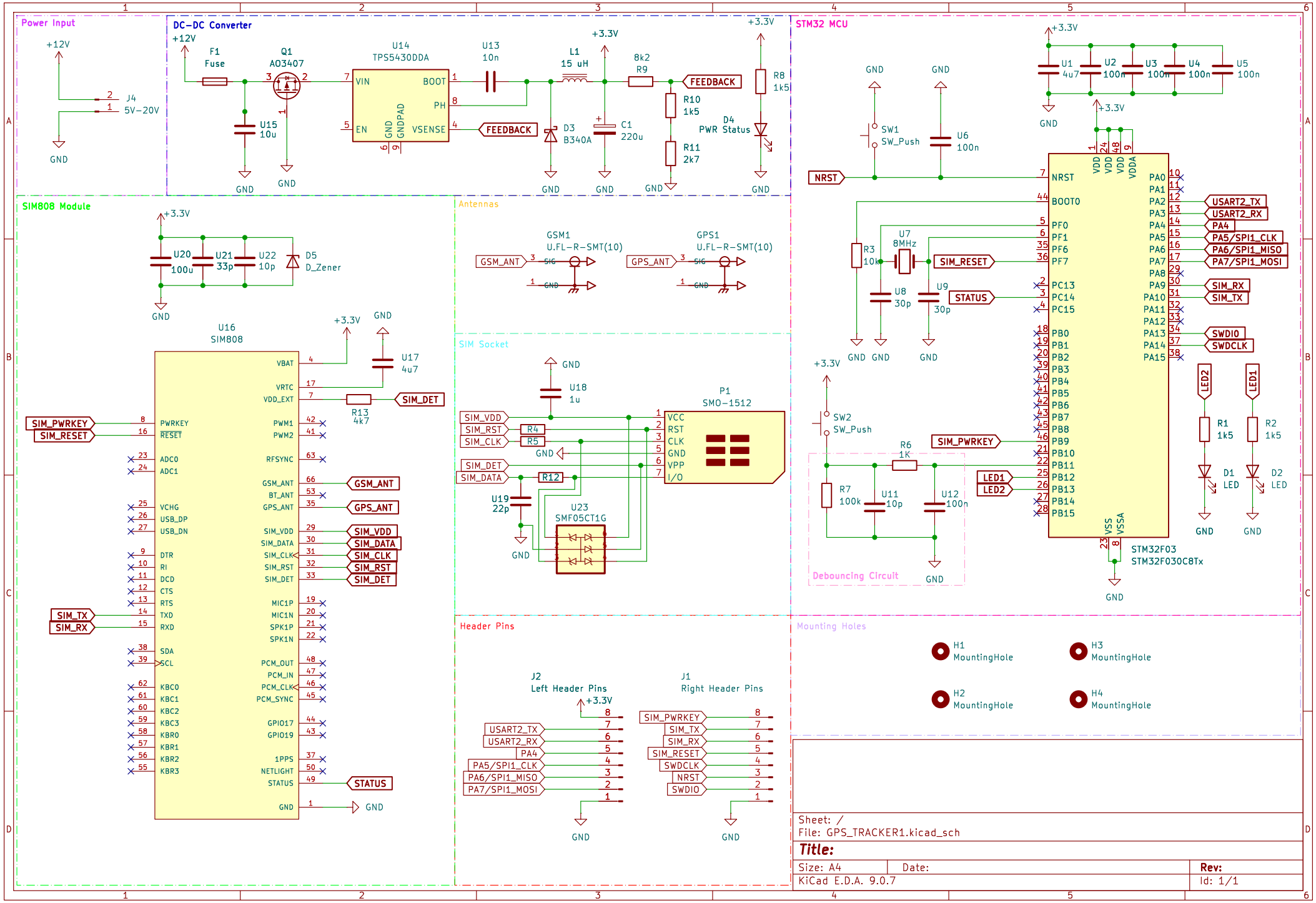
Power Input
+12V
J4
5V-20V
GND
DC-DC Converter
+12V
F1
Fuse
Q1
AO3407
U15
10u
U14
TPS5430DDA
VIN
BOOT
PH
EN
GND
GNDPAD
VSENSE
U13
10n
L1
15 uH
+3.3V
8k2
R9
FEEDBACK
R10
1k5
R11
2k7
D3
B340A
C1
220u
D4
PWR Status
R8
1k5
STM32 MCU
U1
4u7
U2
100n
U3
100n
U4
100n
U5
100n
SW1
SW_Push
U6
100n
NRST
BOOT0
PF0
PF1
PF6
PF7
PC13
PC14
PC15
PB0
PB1
PB2
PB3
PB4
PB5
PB6
PB7
PB8
PB9
PB10
PB11
PB12
PB13
PB14
PB15
PA0
PA1
PA2
PA3
PA4
PA5
PA6
PA7
PA8
PA9
PA10
PA11
PA12
PA13
PA14
PA15
VDD
VDDA
VSS
VSSA
USART2_TX
USART2_RX
PA4
PA5/SPI1_CLK
PA6/SPI1_MISO
PA7/SPI1_MOSI
SIM_RX
SIM_TX
SWDIO
SWDCLK
U7
8MHz
R3
10k
U8
30p
U9
30p
SIM_RESET
STATUS
SW2
SW_Push
SIM_PWRKEY
R6
1K
R7
100k
U11
10p
U12
100n
Debouncing Circuit
LED1
LED2
R1
1k5
R2
1k5
D1
LED
D2
LED
STM32F03
STM32F030C8Tx
SIM808 Module
U20
100u
U21
33p
U22
10p
D5
D_Zener
U16
SIM808
VBAT
VRTC
VDD_EXT
U17
4u7
R13
4k7
SIM_DET
PWRKEY
RESET
PWM1
PWM2
RFSYNC
GSM_ANT
BT_ANT
GPS_ANT
VCHG
USB_DP
USB_DN
SIM_VDD
SIM_DATA
SIM_CLK
SIM_RST
DTR
RI
DCD
CTS
RTS
TXD
RXD
MIC1P
MIC1N
SPK1P
SPK1N
SDA
SCL
PCM_OUT
PCM_IN
PCM_CLK
PCM_SYNC
KBC0
KBC1
KBC2
KBC3
KBR0
KBR1
KBR2
KBR3
GPIO17
GPIO19
1PPS
NETLIGHT
STATUS
Antennas
GSM1
U.FL-R-SMT(10)
GPS1
U.FL-R-SMT(10)
SIG
SIM Socket
U18
1u
P1
SMO-1512
VCC
RST
CLK
GND
VPP
I/O
R4
R5
R12
U19
22p
U23
SMF05CT1G
Header Pins
J2
Left Header Pins
J1
Right Header Pins
Mounting Holes
H1
MountingHole
H2
MountingHole
H3
MountingHole
H4
MountingHole
Sheet: /
File: GPS_TRACKER1.kicad_sch
Title:
Size: A4
Date:
Rev:
KiCad E.D.A. 9.0.7
Id: 1/1