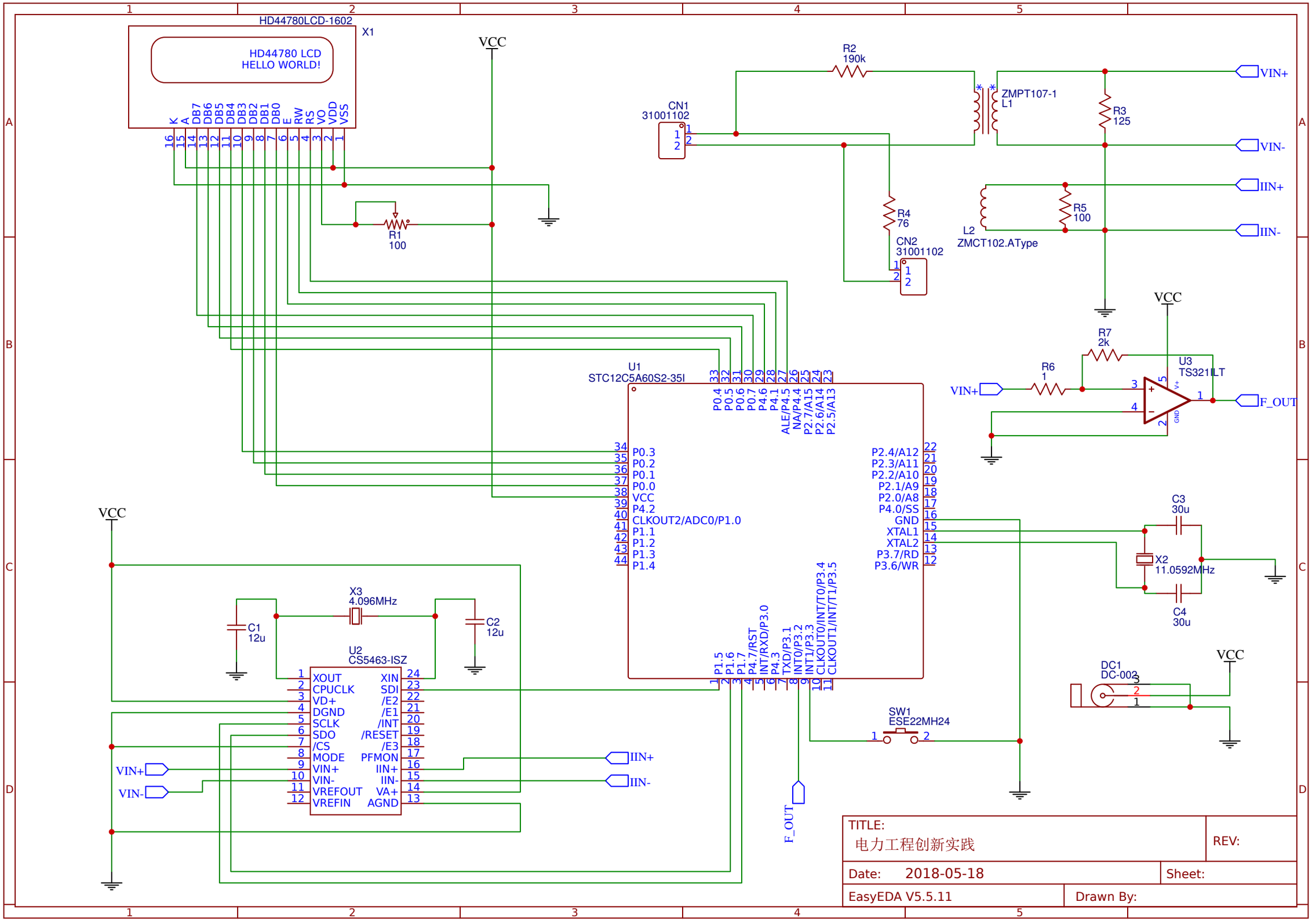
HD44780LCD-1602
X1
HD44780 LCD
HELLO WORLD!
K A DB7 DB6 DB5 DB4 DB3 DB2 DB1 DB0 E RW RS VO VDD VSS
16 15 14 13 12 11 10 9 8 7 6 5 4 3 2 1
VCC
R1
100
R2
190k
CN1
31001102
ZMPT107-1
L1
R3
125
VIN+
VIN-
IIN+
IIN-
R4
76
CN2
31001102
L2
ZMCT102.AType
R5
100
U1
STC12C5A60S2-35I
P0.4 P0.5 P0.6 P0.7 P4.6 P4.1 ALE/P4.5 NA/P4.4 P2.7/A15 P2.6/A14 P2.5/A13
33 32 31 30 29 28 27 26 25 24 23
P0.3
P0.2
P0.1
P0.0
VCC
P4.2
CLKOUT2/ADC0/P1.0
P1.1
P1.2
P1.3
P1.4
34 35 36 37 38 39 40 41 42 43 44
P2.4/A12
P2.3/A11
P2.2/A10
P2.1/A9
P2.0/A8
P4.0/SS
GND
XTAL1
XTAL2
P3.7/RD
P3.6/WR
22 21 20 19 18 17 16 15 14 13 12
P1.5 P1.6 P1.7 P4.7/RST INT/RXD/P3.0 P4.3 TXD/P3.1 INT0/P3.2 INT1/P3.3 CLKOUT0/INT/T0/P3.4 CLKOUT1/INT/T1/P3.5
1 2 3 4 5 6 7 8 9 10 11
R7
2k
R6
1
U3
TS321ILT
F_OUT
C3
30u
X2
11.0592MHz
C4
30u
DC1
DC-002
SW1
ESE22MH24
X3
4.096MHz
C1
12u
C2
12u
U2
CS5463-ISZ
XOUT
CPUCLK
VD+
DGND
SCLK
SDO
/CS
MODE
VIN+
VIN-
VREFOUT
VREFIN
XIN
SDI
/E2
/E1
/INT
/RESET
/E3
PFMON
IIN+
IIN-
VA+
AGND
1 2 3 4 5 6 7 8 9 10 11 12
24 23 22 21 20 19 18 17 16 15 14 13
TITLE:
电力工程创新实践
REV:
Date: 2018-05-18
Sheet:
EasyEDA V5.5.11
Drawn By: