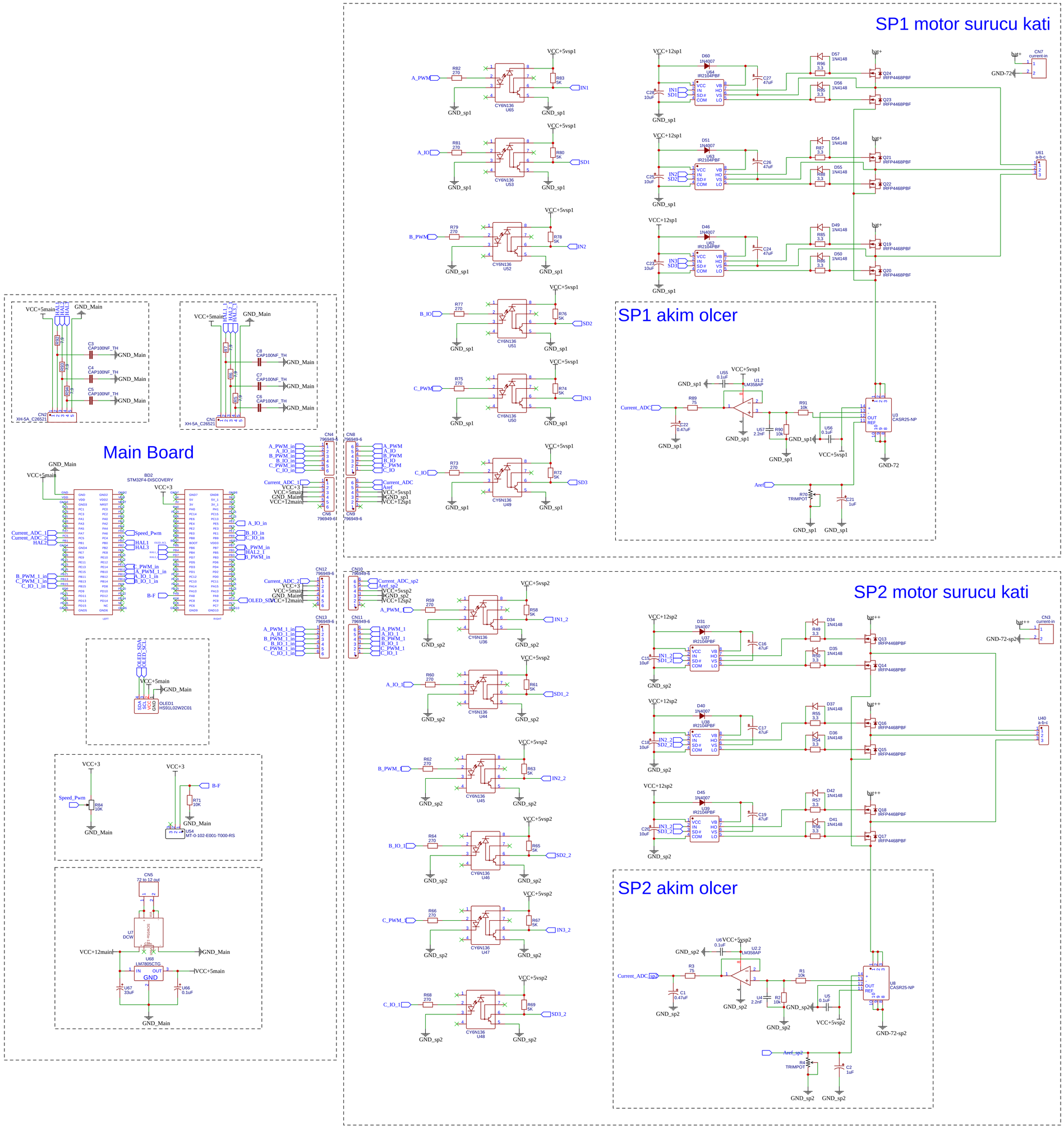
SP1 motor surucu kati
SP1 akim olcer
Main Board
SP2 motor surucu kati
SP2 akim olcer
BDC
TITLE:
REV: 1.1
Company: MANACOMP
Sheet: 1/1
Date: 2024-10-09
Drawn By: