MAX9812/MAX9813

Tiny, Low-Cost, Single/Dual-Input, Fixed-Gain Microphone Amplifiers with Integrated Bias

General Description

The MAX9812/MAX9813 are single/dual-input, 20dB fixed-gain microphone amplifiers. They offer tiny packaging and a low-noise, integrated microphone bias, making them ideal for portable audio applications such as notebook computers, cell phones, and PDAs. These amplifiers feature a 500kHz bandwidth, rail-to-rail outputs, an industry-leading 100dB power-supply rejection ratio, and a very low 0.015% THD+N. Power-saving features include very low 230µA supply current and a total shutdown mode that cuts the combined supply and BIAS currents to only 100nA.

The MAX9812 is a single amplifier in a 6-pin SC70 package (2mm x 2.1mm) and the MAX9813 is a dual-input amplifier available in an 8-pin SOT23 (3mm x 3mm) package. The MAX9813 has two inputs allowing two microphones to be multiplexed to a single output.

The MAX9812/MAX9813 are offered in two grades. The MAX9812L/MAX9813L are optimized for 3.3V supply operation (2.7V to 3.6V). The MAX9812H/MAX9813H are PC2001 compliant and are optimized for 5V operation (4.5V to 5.5V). Both devices are specified over the -40°C to +85°C extended operating temperature range.

Applications

Notebook Computers

PDAs

Smart Phones

Digital Cameras

Video Tape Recorders

Features

- **PC2001 Compliant**
- **100dB at 217Hz Power-Supply Rejection Ratio**
- **Very Low 230µA Quiescent Current**
- **Low 0.015% THD+N**
- **Available in Two Versions**
  MAX9812L/MAX9813L—2.7V to 3.6V
  MAX9812H/MAX9813H—4.5V to 5.5V
- **Internal Low-Noise Microphone Bias Supply**
  2.3V for MAX9812L/MAX9813L
  4.0V for MAX9812H/MAX9813H
- **100nA Low-Power Shutdown Mode**
- **Rail-to-Rail Outputs**
- **20dB Fixed Gain**
- **Available in Tiny 6-Pin SC70 (2mm x 2.1mm) and 8-Pin SOT23 (3mm x 3mm) Packages**
- **Extended Temperature Range -40°C to +85°C**

Ordering Information

PART	TEMP RANGE	PIN-PACKAGE	V_{CC} (V)
MAX9812LEXT+T	-40°C to +85°C	6 SC70	2.7 to 3.6
MAX9812HEXT+T	-40°C to +85°C	6 SC70	4.5 to 5.5
MAX9813LEKA+T	-40°C to +85°C	8 SOT23	2.7 to 3.6
MAX9813HEKA+T	-40°C to +85°C	8 SOT23	4.5 to 5.5

+Denotes a lead(Pb)-free/RoHS-compliant package.

Pin Configurations, Selector Guide, and Typical Operating Circuits appear at end of data sheet.

Simplified Block Diagrams

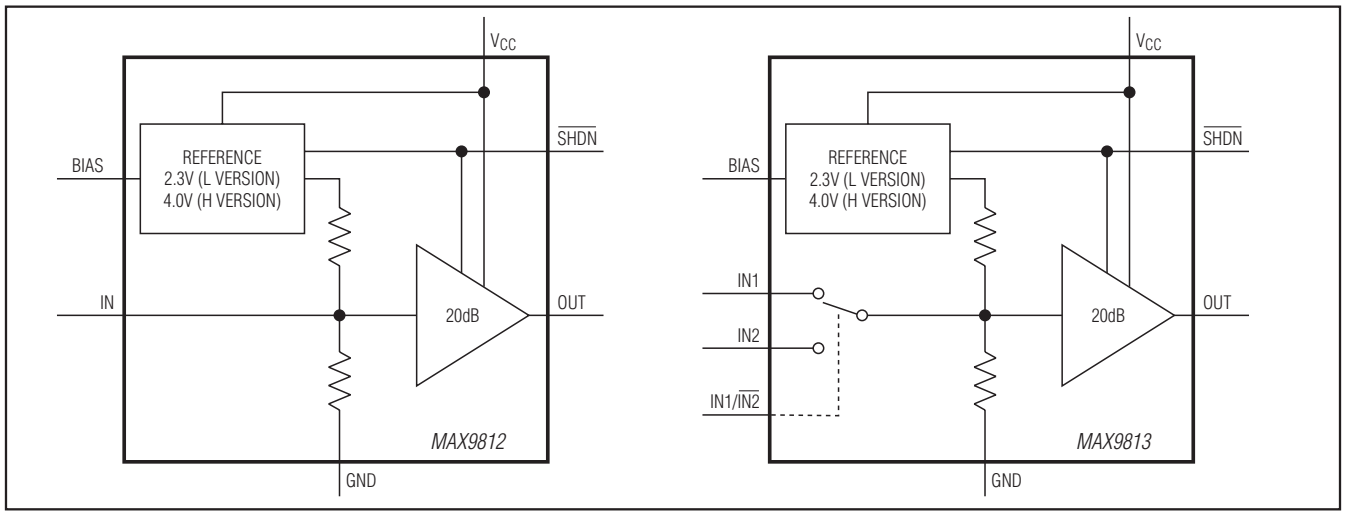

For pricing, delivery, and ordering information, please contact Maxim Direct at 1-888-629-4642, or visit Maxim's website at www.maximintegrated.com.

19-2840; Rev 3; 4/14

ABSOLUTE MAXIMUM RATINGS

(All voltages referenced to GND.)
V_{CC} .....-0.3V to +6.0V
All Other Pins.....-0.3V to (V_{CC} + 0.3V)
Continuous Current (IN, $\overline{SHDN}$, IN1, IN2, IN1/$\overline{IN2}$).....±20mA
OUT, BIAS Short-Circuit Duration (to GND or V_{CC})...Continuous
Continuous Power Dissipation (T_A = +70°C)
SC70 (derate 3.1mW/°C above +70°C).....245mW
SOT23 (derate 8.9mw/°C above +70°C) 714mW

Operating Temperature Range .....-40°C to +85°C
Storage Temperature Range .....-65°C to +150°C
Junction Temperature.....+150°C
Lead Temperature (soldering, 10s) .....+300°C
Soldering Temperature (reflow) .....+260°C

Stresses beyond those listed under "Absolute Maximum Ratings" may cause permanent damage to the device. These are stress ratings only, and functional operation of the device at these or any other conditions beyond those indicated in the operational sections of the specifications is not implied. Exposure to absolute maximum rating conditions for extended periods may affect device reliability.

ELECTRICAL CHARACTERISTICS

(V_{CC} = 3.3V, I_{BIAS} = 500µA (MAX9812L/MAX9813L), V_{CC} = 5V, I_{BIAS} = 800µA (MAX9812H/MAX9813H), V_{GND} = 0V, R_L = open, $\overline{SHDN}$ = V_{CC}, T_A = T_{MIN} to T_{MAX}, unless otherwise noted. Typical values are at T_A = +25°C.) (Note 1)

PARAMETER	SYMBOL	CONDITIONS		MIN	TYP	MAX	UNITS
GENERAL							
Supply Voltage Range	V_{CC}	MAX9812L/MAX9813L	Inferred from PSRR test	2.7		3.6	V
		MAX9812H/MAX9813H		4.5		5.5	
Supply Current	I_{CC}	I_{BIAS} = 0A			230	400	µA
Shutdown Supply Current	I_{CC_SHDN}	$\overline{SHDN}$ = GND			0.1	1	µA
Amplifier Output Bias Voltage	V_{OUT_DC}	MAX9812L/MAX9813L		1.35	1.5	1.65	V
		MAX9812H/MAX9813H		2.25	2.5	2.75	
Input Resistance	R_{IN}				85		kΩ
Voltage Gain	A_V			19	20	21	dB
Power-Supply Rejection Ratio	$PSRR_{OUT}$	Input referred, T_A = +25°C	DC	90	100		dB
			f = 217Hz		100		
			f = 1kHz		100		
			f = 10kHz		90		
Output Voltage Swing	V_{OH}	R_L = 10kΩ to V_{CC}/2			V_{CC} - 0.1		V
		R_L = 1kΩ to V_{CC}/2		V_{CC} - 0.25V	V_{CC} - 0.1V		
	V_{OL}	R_L = 10kΩ to V_{CC}/2			0.1		
		R_L = 1kΩ to V_{CC}/2			0.1	0.25	
Output Short-Circuit Current	I_{OUT_SC}	Sinking or sourcing		3	12	24	mA
Small-Signal -3dB Bandwidth	BW	V_{OUT} = 10mV_{P-P}			400		kHz
Output Capacitive-Load Stability	C_L	No sustained oscillations			50		pF
Output Impedance	Z_{OUT}	f = 1kHz			0.5		Ω
Output Slew Rate	SR	V_{OUT} = 1V step			1		V/µs

ELECTRICAL CHARACTERISTICS (continued)

(V_{CC} = 3.3V, I_{BIAS} = 500µA (MAX9812L/MAX9813L), V_{CC} = 5V, I_{BIAS} = 800µA (MAX9812H/MAX9813H), V_{GND} = 0V, R_L = open, $\overline{SHDN}$ = V_{CC}, T_A = T_{MIN} to T_{MAX}, unless otherwise noted. Typical values are at T_A = +25°C.) (Note 1)

PARAMETER	SYMBOL	CONDITIONS		MIN	TYP	MAX	UNITS
Amplifier Input Voltage-Noise Density	e_n	Inputs at AC GND	f = 1kHz		40		nV/√Hz
Total Integrated Input Noise	V_n	22Hz to 22kHz BW, inputs at AC GND			5		µV_{RMS}
Off-Isolation		Input referred, MAX9813 only	1kHz		75		dB
			10kHz		60		
Total Harmonic Distortion Plus Noise	THD+N	f = 1kHz, R_L = 10kΩ to V_{CC}/2, BW = 22Hz to 22kHz	V_{OUT} = 1V_{P-P} (L version)		0.04		%
			V_{OUT} = 4V_{P-P} (H version)		0.015		
BIAS							
Bias Output Voltage Range	V_{BIAS}	MAX9812L/MAX9813L		2.1	2.30	2.55	V
		MAX9812H/MAX9813H		3.6	4.0	4.4	
Bias Output Resistance	R_{BIAS}				0.1		Ω
Power-Supply Rejection Ratio (V_{CC} to BIAS)	$PSRR_{BIAS}$	DC, T_A = +25°C		70	80		dB
		f = 217Hz			80		
		f = 1kHz			75		
		f = 10kHz			55		
BIAS Current Limit	I_{BIAS_SC}	BIAS short to GND		5	22	50	mA
BIAS Capacitive-Load Stability	C_{BIAS}	No sustained oscillations			50		pF
Total Integrated BIAS Noise	V_n	22Hz to 22kHz BW			29		µV_{RMS}
DIGITAL INPUTS ($\overline{SHDN}$, IN1/$\overline{IN2}$)							
Logic-Low Threshold	V_{IL}					0.8	V
Logic-High Threshold	V_{IH}			2.0			V
Logic Input Current	I_{IN}	$\overline{SHDN}$ = GND or V_{CC}				±1	µA
Shutdown Enable Time	$t_{\overline{SHDN}_\overline{ON}}$	95% of settled value			10		ms
Shutdown Disable Time	$t_{\overline{SHDN}_\overline{OFF}}$				50		µs
IN1/$\overline{IN2}$ Select Time	t_{SEL}				10		µs

Note 1: All specifications are 100% tested at T_A = +25°C. Temperature limits are guaranteed by design.

Typical Operating Characteristics

(V_{CC} = 3.3V (MAX9812L/MAX9813L), V_{CC} = 5V (MAX9812H/MAX9813H), V_{GND} = 0V, R_L = 10kΩ to $V_{CC}/2$, $\overline{SHDN}$ = V_{CC}, T_A = +25°C, unless otherwise noted.)

GAIN vs. FREQUENCY

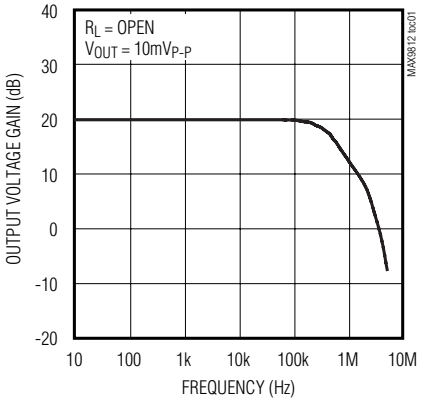

POWER-SUPPLY REJECTION RATIO vs. FREQUENCY

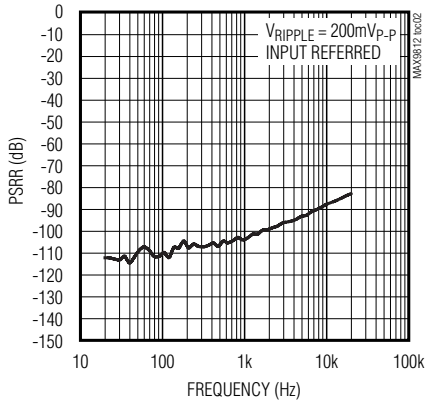

POWER-SUPPLY REJECTION RATIO (V_{CC} TO BIAS) vs. FREQUENCY

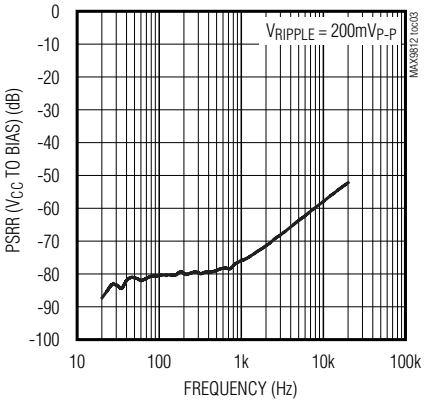

SUPPLY CURRENT vs. TEMPERATURE

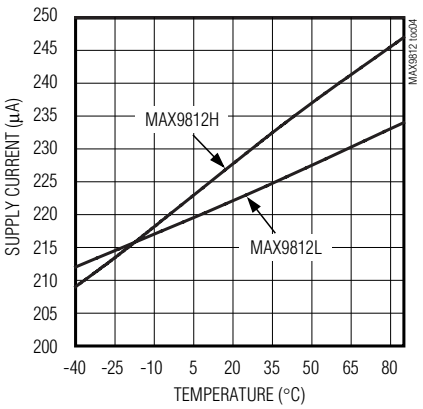

SUPPLY CURRENT vs. SUPPLY VOLTAGE

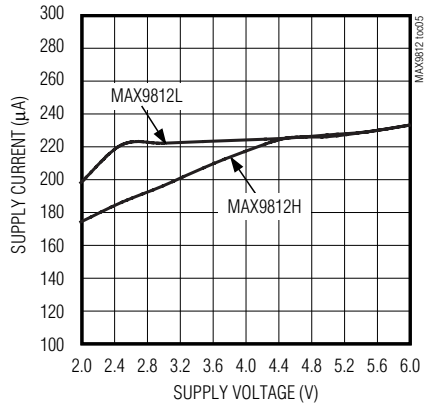

SHUTDOWN SUPPLY CURRENT vs. TEMPERATURE

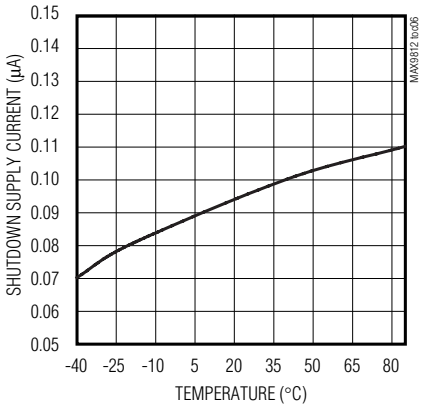

V_{BIAS} vs. TEMPERATURE

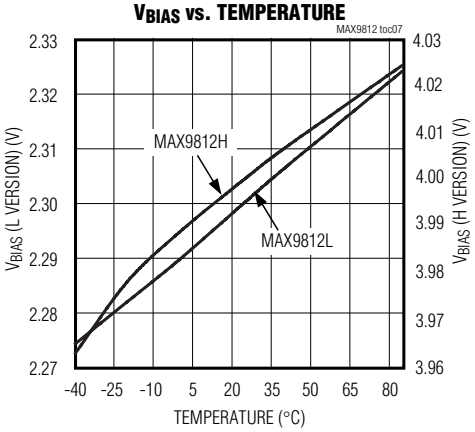

V_{BIAS} vs. I_{BIAS}

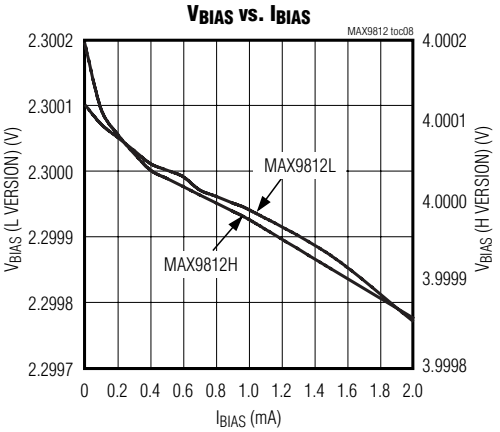

Typical Operating Characteristics (continued)

(V_{CC} = 3.3V (MAX9812L/MAX9813L), V_{CC} = 5V (MAX9812H/MAX9813H), V_{GND} = 0V, R_L = 10kΩ to $V_{CC}/2$, $\overline{SHDN}$ = V_{CC}, T_A = +25°C, unless otherwise noted.)

TOTAL HARMONIC DISTORTION PLUS NOISE vs. FREQUENCY

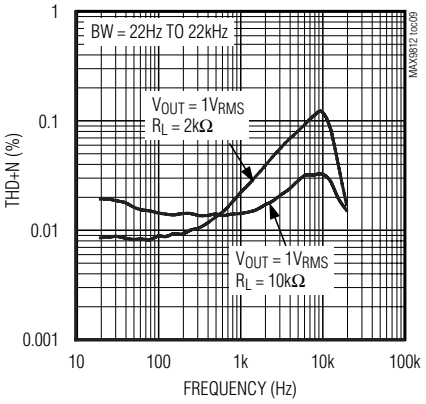

TOTAL HARMONIC DISTORTION PLUS NOISE vs. OUTPUT AMPLITUDE

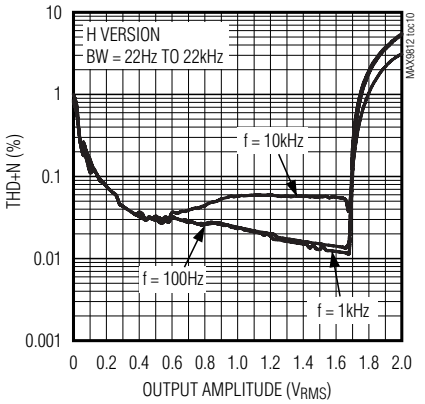

TOTAL HARMONIC DISTORTION PLUS NOISE vs. OUTPUT AMPLITUDE

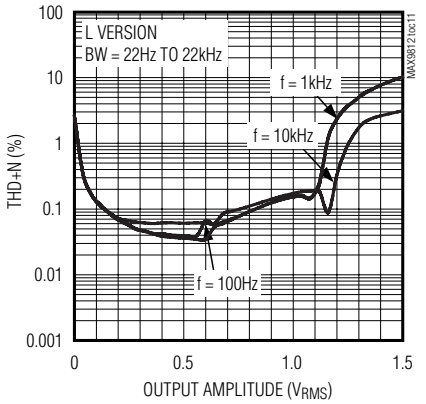

INPUT-REFERRED NOISE vs. FREQUENCY

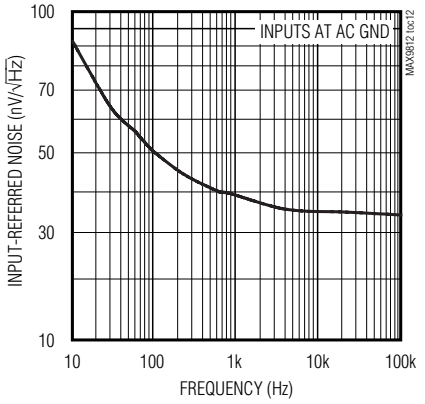

BIAS NOISE vs. FREQUENCY

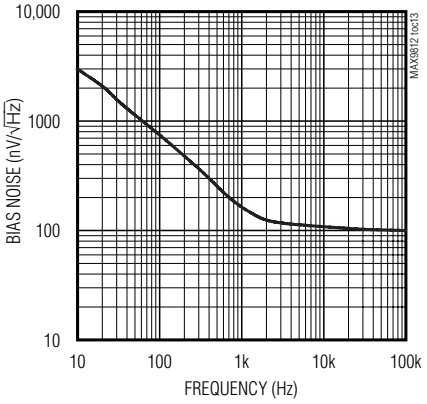

OFF-ISOLATION vs. FREQUENCY

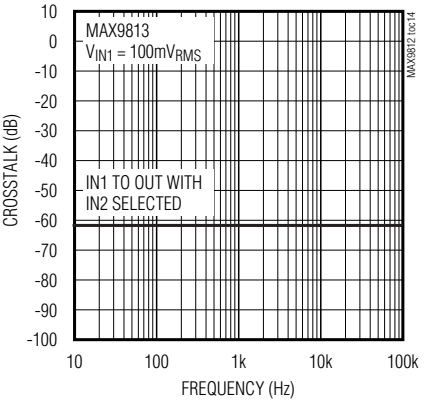

Typical Operating Characteristics (continued)

(V_{CC} = 3.3V (MAX9812L/MAX9813L), V_{CC} = 5V (MAX9812H/MAX9813H), V_{GND} = 0V, R_L = 10kΩ to $V_{CC}/2$, $\overline{SHDN}$ = V_{CC}, T_A = +25°C, unless otherwise noted.)

SMALL-SIGNAL PULSE RESPONSE (R_L = OPEN, C_L = 10pF)

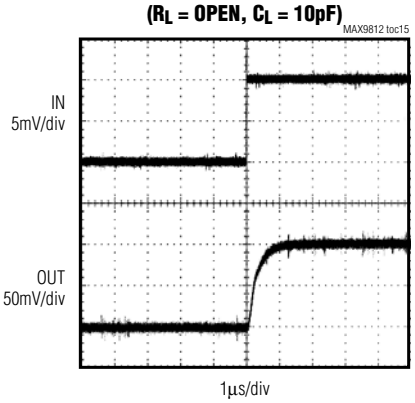

LARGE-SIGNAL PULSE RESPONSE (R_L = OPEN, C_L = 10pF)

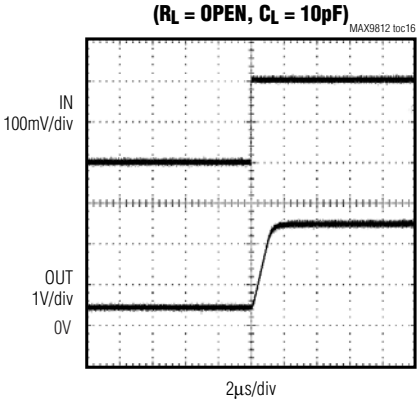

OUT-OF-SHUTDOWN WAVEFORM INPUT UNCONNECTED

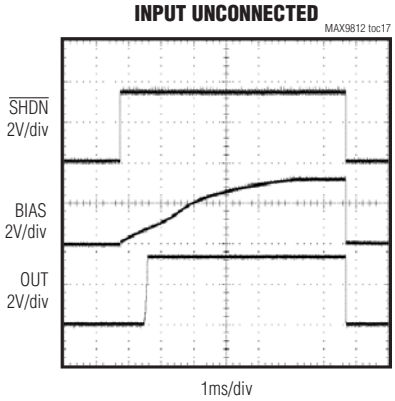

MAX9813 SWITCHING BETWEEN TWO INPUTS

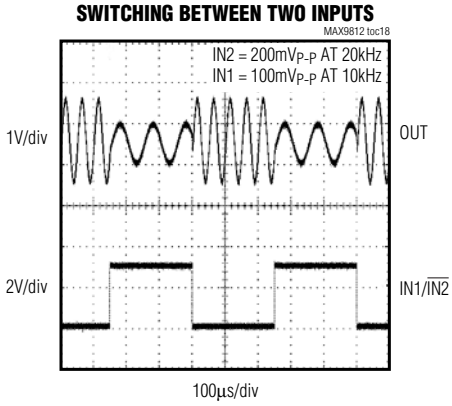

OUTPUT OVERDRIVEN

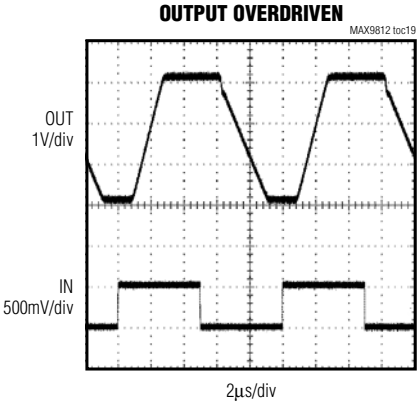

Pin Description

PIN		NAME	FUNCTION
MAX9812L/ MAX9812H	MAX9813L/ MAX9813H		
1	3	$\overline{SHDN}$	Active-Low Shutdown Input. Connect $\overline{SHDN}$ to V_{CC} for normal operation. Connect $\overline{SHDN}$ to GND for shutdown. $\overline{SHDN}$ is a high-impedance input; do not leave unconnected.
2	2	GND	Ground
3	1	OUT	Amplifier Output
4	8	V_{CC}	Positive Supply. Bypass V_{CC} to GND with a 0.1µF capacitor.
5	7	BIAS	Low-Noise Microphone Bias Output. 2.3V output for MAX9812L/MAX9813L. 4V output for MAX9812H/MAX9813H.
6	—	IN	Amplifier Input (MAX9812)
—	6	IN1	Amplifer Input 1 (MAX9813)
—	5	IN2	Amplifier Input 2 (MAX9813)
—	4	IN1/$\overline{IN2}$	Input Selector. When IN1/$\overline{IN2}$ is high, IN1 is selected. When IN1/$\overline{IN2}$ low, IN2 is selected.

Detailed Description

The MAX9812_/MAX9813_ are low-power fixed-gain microphone amplifiers available in a single- or dual-input configuration. The gain is set at 10V/V (20dB) with a 400kHz, -3dB bandwidth. They also feature a low-noise, integrated microphone input bias voltage.

Single/Dual Input

The MAX9812L/MAX9812H are single-input amplifiers and the MAX9813L/MAX9813H are dual-input amplifiers. All devices typically have an input impedance of 85kΩ. The inputs to the dual version are controlled through a fast 2:1 mux, selectable through the IN1/$\overline{IN2}$ pin. Driving IN1/$\overline{IN2}$ high selects IN1 and driving the IN1/$\overline{IN2}$ low selects IN2. IN1/$\overline{IN2}$ is designed to be driven by a logic high of ≥2V and a logic low ≤0.8V. The IN1/$\overline{IN2}$ has a 10µs switching time from one channel to the other.

PC2001 Low-Noise Microphone BIAS

The MAX9812_/MAX9813_ provide a low-noise voltage BIAS designed for biasing electret condenser microphone (ECM) cartridges. The BIAS output is regulated to typically 2.3V for the MAX9812L/MAX9813L and 4V for the MAX9812H/MAX9813H. In the single-input version (MAX9812_), the BIAS output can source up to 1mA. In the dual-input version (MAX9813_), the BIAS output can source up to 2mA. The MAX9812H/MAX9813H provides a PC2001-compliant BIAS voltage.

Output Stage

The MAX9812_/MAX9813_ rail-to-rail output (OUT) typically swings to within 100mV of the rails when driving 10kΩ. The output DC bias point is set to 1.5V for the MAX9812L/MAX9813L and 2.5V for the MAX9812H/MAX9813H.

Shutdown Mode

$\overline{SHDN}$ controls whether the MAX9812_/MAX9813_ is active or in shutdown mode. Driving $\overline{SHDN}$ low forces a low-power (100nA) shutdown mode. In this mode, the OUT pin is set to a high-impedance state and the BIAS pin is pulled down (70kΩ). Driving $\overline{SHDN}$ high enables the MAX9812_/MAX9813_. $\overline{SHDN}$ is a high-impedance input and cannot be left unconnected.

Driving Capacitive Loads

The MAX9812_/MAX9813_ output can drive up to 50pF of capacitance without sustained oscillations.

Thermal Shutdown

The thermal shutdown feature protects the MAX9812_/MAX9813_ from destruction due to overheating caused by shorting the outputs. This protection feature causes OUT and BIAS to shut down and go high impedance when the die temperature reaches +140°C. The device restarts after the die temperature falls below +120°C.

Applications Information

Power-Up

The MAX9812_/MAX9813_ output typically settles to 95% within 10ms after power-up.

Typical Application Circuit

Figure 1 shows the MAX9813H used as a preamplifier with the MAX9760 3W audio power amplifier.

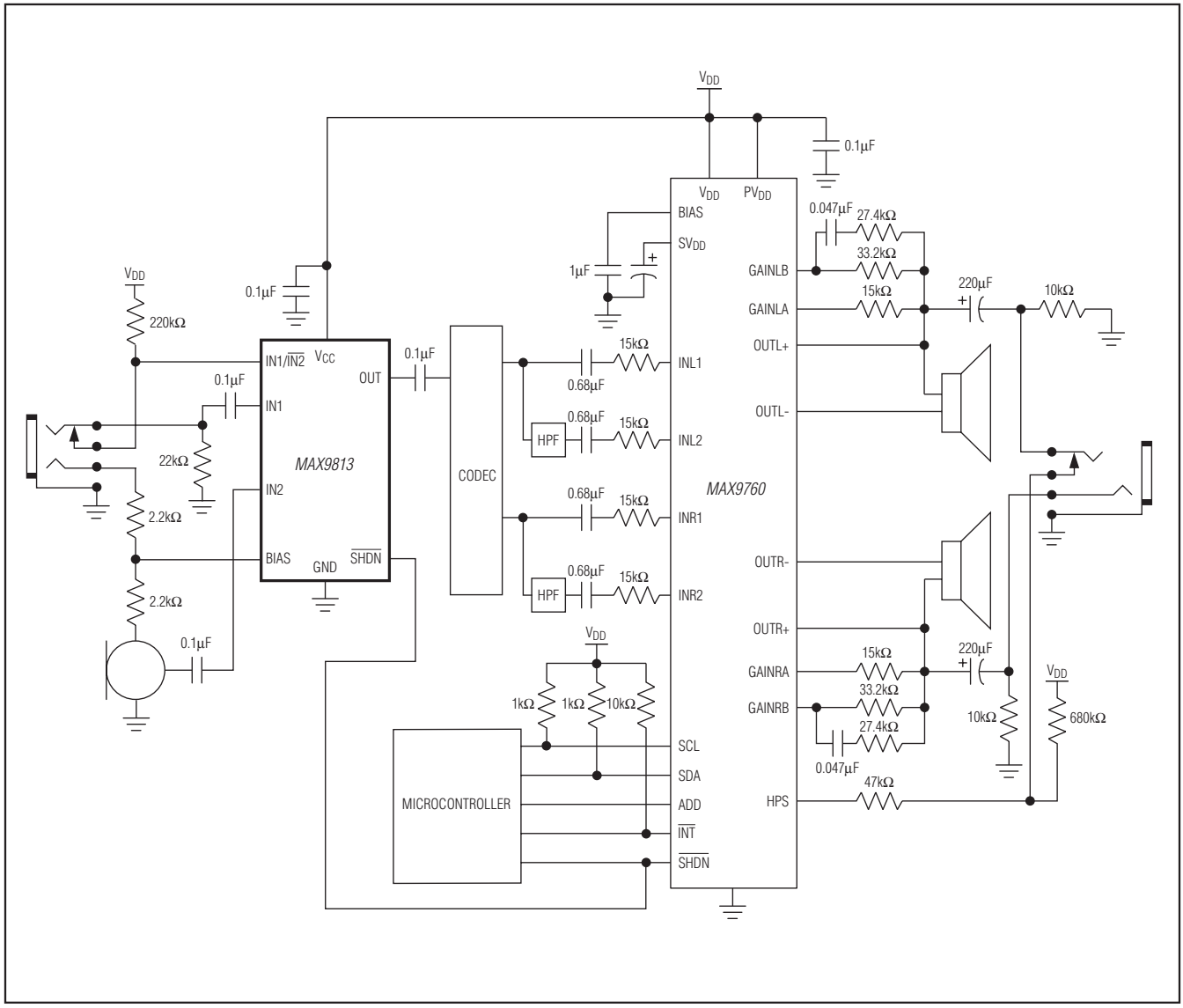

Figure 1. Typical Application Circuit

Tiny, Low-Cost, Single/Dual-Input, Fixed-Gain Microphone Amplifiers with Integrated Bias

Typical Operating Circuits

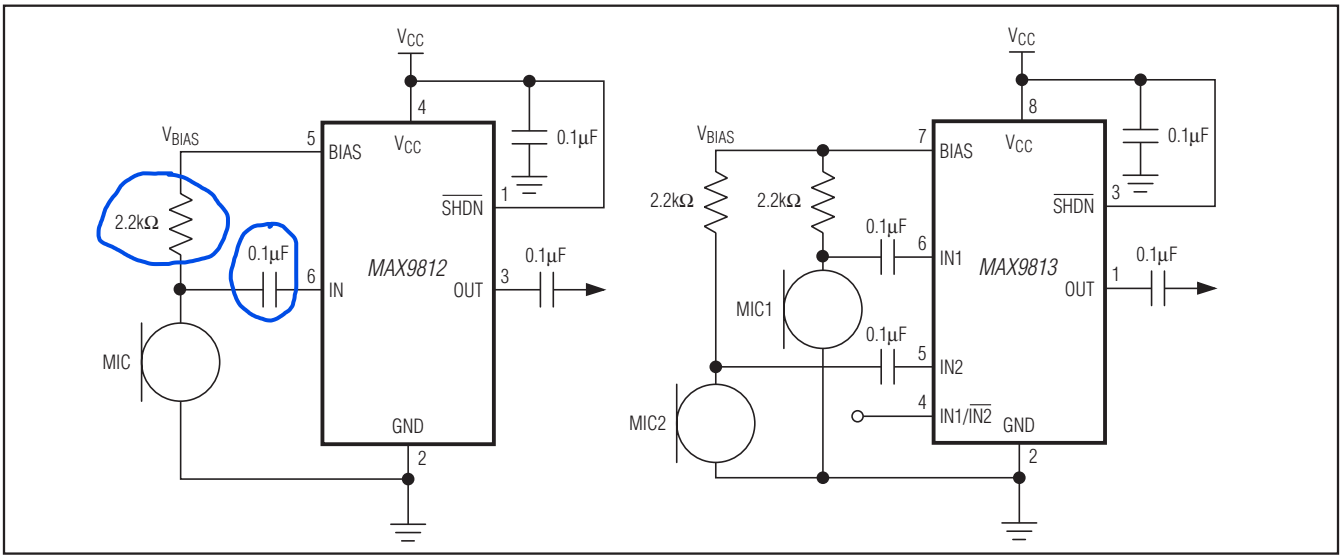

Pin Configurations

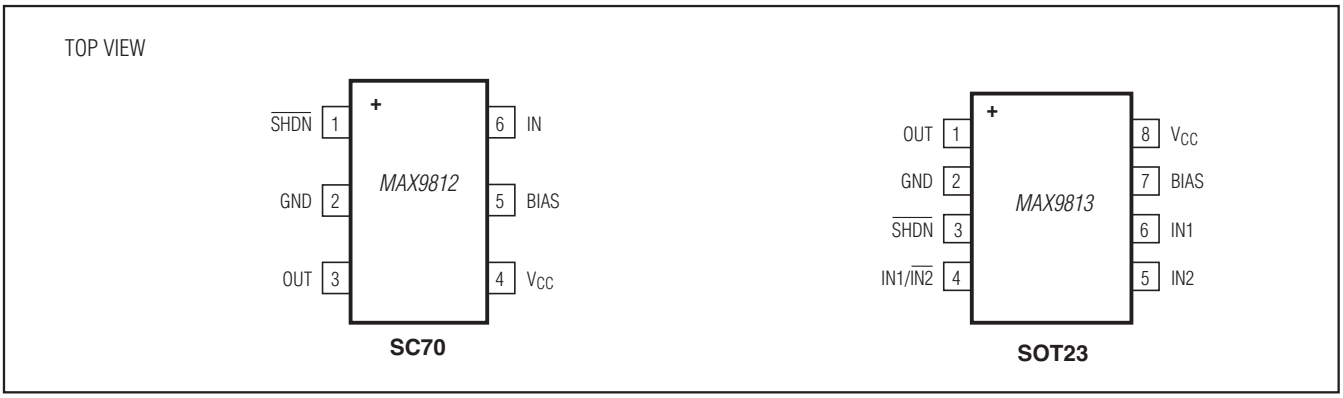

Selector Guide

PART	PIN-PACKAGE	V_{CC} (V)	TOP MARK
MAX9812LEXT+T	6 SC70	2.7 to 3.6	ABJ
MAX9812HEXT+T	6 SC70	4.5 to 5.5	ABK
MAX9813LEKA+T	8 SOT23	2.7 to 3.6	AEEU
MAX9813HEKA+T	8 SOT23	4.5 to 5.5	AEEV

+Denotes a lead(Pb)-free/RoHS-compliant package.

Package Information

For the latest package outline information and land patterns (footprints), go to **www.maximintegrated.com/packages**. Note that a "+", "#", or "-" in the package code indicates RoHS status only. Package drawings may show a different suffix character, but the drawing pertains to the package regardless of RoHS status.

PACKAGE TYPE	PACKAGE CODE	OUTLINE NO.	LAND PATTERN NO.
6 SC70	X6SN+1	21-0077	90-0189
8 SOT	K8+1	21-0078	90-0176

Chip Information

PROCESS: BiCMOS

Revision History

REVISION NUMBER	REVISION DATE	DESCRIPTION	PAGES CHANGED
0	4/03	Initial release	—
1	8/12	Added lead-free description	1, 9
2	9/12	Added automotive qualified part	1
3	4/14	Removed automotive qualified part and references	1

Maxim cannot assume responsibility for use of any circuitry other than circuitry entirely embodied in a Maxim product. No circuit patent licenses are implied. Maxim reserves the right to change the circuitry and specifications without notice at any time. The parametric values (min and max limits) shown in the Electrical Characteristics table are guaranteed. Other parametric values quoted in this data sheet are provided for guidance.

© 2014 Maxim Integrated Products, Inc. The Maxim logo and Maxim Integrated are trademarks of Maxim Integrated Products, Inc.