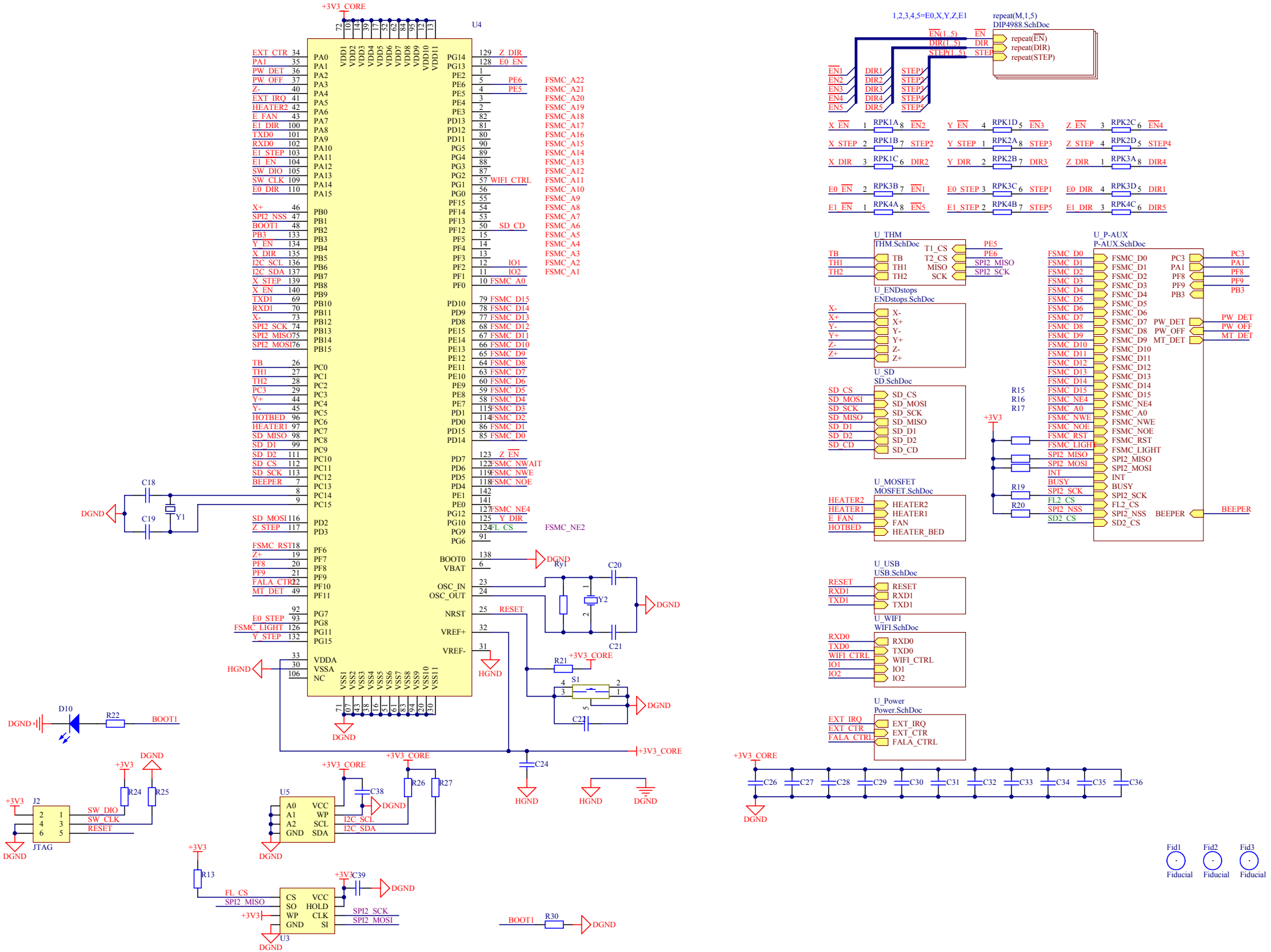
U4
+3V3_CORE
EXT_CTR 34
PA1 35
PW_DET 36
PW_OFF 37
Z- 40
EXT_IRQ 41
HEATER2 42
E_FAN 43
E1_DIR 100
TXD0 101
RXD0 102
E1_STEP 103
E1_EN 104
SW_DIO 105
SW_CLK 109
E0_DIR 110
X+ 46
SPI2_NSS 47
BOOT1 48
PB3 133
Y_EN 134
X_DIR 135
I2C_SCL 136
I2C_SDA 137
X_STEP 139
X_EN 140
TXD1 69
RXD1 70
X- 73
SPI2_SCK 74
SPI2_MISO 75
SPI2_MOSI 76
TB 26
TH1 27
TH2 28
PC3 29
Y+ 44
Y- 45
HOTBED 96
HEATER1 97
SD_MISO 98
SD_D1 99
SD_D2 111
SD_CS 112
SD_SCK 113
BEEPER 7
SD_MOSI 116
Z_STEP 117
FSMC_RST 18
Z+ 19
PF8 20
PF9 21
FALA_CTR 22
MT_DET 49
E0_STEP 93
FSMC_LIGHT 126
Y_STEP 132
PG14 129 Z_DIR
PG13 128 E0_EN
PE6 5 PE6
PE5 4 PE5
PD13 82 FSMC_A22
PD12 81 FSMC_A21
PD11 80 FSMC_A20
PG5 90 FSMC_A19
PG4 89 FSMC_A18
PG3 88 FSMC_A17
PG2 87 FSMC_A16
PG1 57 WIFI_CTRL FSMC_A15
PG0 56 FSMC_A14
PF15 55 FSMC_A13
PF14 54 FSMC_A12
PF13 53 FSMC_A11
PF12 50 SD_CD FSMC_A10
PF5 15 FSMC_A9
PF4 14 FSMC_A8
PF3 13 FSMC_A7
PF2 12 IO1 FSMC_A6
PF1 11 IO2 FSMC_A5
PF0 10 FSMC_A0 FSMC_A4
PD10 79 FSMC_D15 FSMC_A3
PD9 78 FSMC_D14 FSMC_A2
PD8 77 FSMC_D13 FSMC_A1
PE15 68 FSMC_D12
PE14 67 FSMC_D11
PE13 66 FSMC_D10
PE12 65 FSMC_D9
PE11 64 FSMC_D8
PE10 63 FSMC_D7
PE9 60 FSMC_D6
PE8 59 FSMC_D5
PE7 58 FSMC_D4
PD1 115 FSMC_D3
PD0 114 FSMC_D2
PD15 86 FSMC_D1
PD14 85 FSMC_D0
PD7 123 Z_EN
PD6 122 FSMC_NWAIT
PD5 119 FSMC_NWE
PD4 118 FSMC_NOE
PE1 142
PE0 141
PG12 127 FSMC_NE4
PG10 125 Y_DIR
PG9 124 FL_CS FSMC_NE2
PG6 91
BOOT0 138
VBAT 6
OSC_IN 23
OSC_OUT 24
NRST 25 RESET
VREF+ 32
VREF- 31
VDDA 33
VSSA 30
NC 106
C18
C19
Y1
DGND
HGND
Ry1
C20
C21
Y2
R21
S1
C22
D10
R22
BOOT1
C24
+3V3_CORE
J2
JTAG
SW_DIO
SW_CLK
RESET
R24
R25
+3V3
U5
A0 VCC
A1 WP
A2 SCL
GND SDA
I2C_SCL
I2C_SDA
C38
R26
R27
R13
FL_CS
SPI2_MISO
CS VCC
SO HOLD
WP CLK
GND SI
SPI2_SCK
SPI2_MOSI
C39
U3
R30
1,2,3,4,5=E0,X,Y,Z,E1
repeat(M,1,5)
DIP4988.SchDoc
EN(1..5)
DIR(1..5)
STEP(1..5)
repeat(EN)
repeat(DIR)
repeat(STEP)
EN1 EN2 EN3 EN4 EN5
DIR1 DIR2 DIR3 DIR4 DIR5
STEP1 STEP2 STEP3 STEP4 STEP5
X_EN 1 RPK1A 8 EN2
X_STEP 2 RPK1B 7 STEP2
X_DIR 3 RPK1C 6 DIR2
E0_EN 2 RPK3B 7 EN1
E1_EN 1 RPK4A 8 EN5
Y_EN 4 RPK1D 5 EN3
Y_STEP 1 RPK2A 8 STEP3
Y_DIR 2 RPK2B 7 DIR3
E0_STEP 3 RPK3C 6 STEP1
E1_STEP 2 RPK4B 7 STEP5
Z_EN 3 RPK2C 6 EN4
Z_STEP 4 RPK2D 5 STEP4
Z_DIR 1 RPK3A 8 DIR4
E0_DIR 4 RPK3D 5 DIR1
E1_DIR 3 RPK4C 6 DIR5
U_THM
THM.SchDoc
TB
TH1
TH2
T1_CS
T2_CS
MISO
SCK
PE5
PE6
SPI2_MISO
SPI2_SCK
U_ENDstops
ENDstops.SchDoc
X-
X+
Y-
Y+
Z-
Z+
U_SD
SD.SchDoc
SD_CS
SD_MOSI
SD_SCK
SD_MISO
SD_D1
SD_D2
U_MOSFET
MOSFET.SchDoc
HEATER2
HEATER1
E_FAN
HOTBED
FAN
HEATER_BED
U_USB
USB.SchDoc
RESET
RXD1
TXD1
U_WIFI
WIFI.SchDoc
RXD0
TXD0
WIFI_CTRL
IO1
IO2
U_Power
Power.SchDoc
EXT_IRQ
EXT_CTR
FALA_CTRL
U_P-AUX
P-AUX.SchDoc
FSMC_D0
FSMC_D1
FSMC_D2
FSMC_D3
FSMC_D4
FSMC_D5
FSMC_D6
FSMC_D7
FSMC_D8
FSMC_D9
FSMC_D10
FSMC_D11
FSMC_D12
FSMC_D13
FSMC_D14
FSMC_D15
FSMC_NE4
FSMC_A0
FSMC_NWE
FSMC_NOE
FSMC_RST
FSMC_LIGHT
SPI2_MISO
SPI2_MOSI
INT
BUSY
SPI2_SCK
FL2_CS
SPI2_NSS
SD2_CS
PW_DET
PW_OFF
MT_DET
BEEPER
PC3
PA1
PF8
PF9
PB3
R15
R16
R17
R19
R20
C26 C27 C28 C29 C30 C31 C32 C33 C34 C35 C36
Fid1
Fid2
Fid3
Fiducial

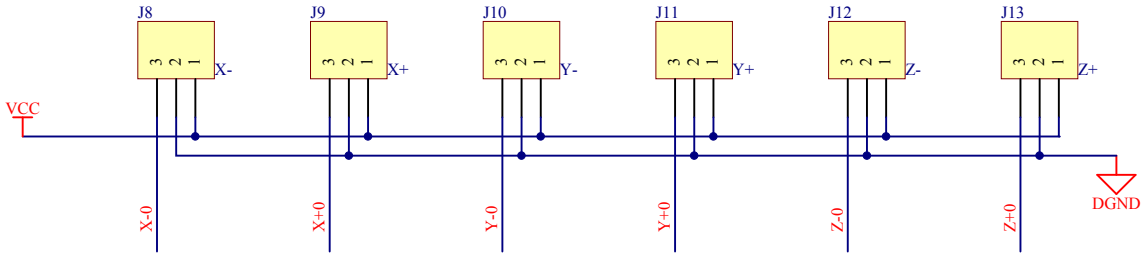
J8
J9
J10
J11
J12
J13
3 2 1
X-
X+
Y-
Y+
Z-
Z+
VCC
DGND
X-0
X+0
Y-0
Y+0
Z-0
Z+0

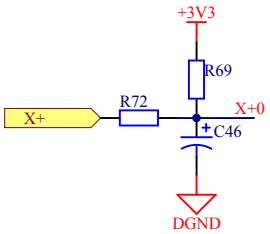
+3V3
R69
R72
X+
X+0
C46
DGND

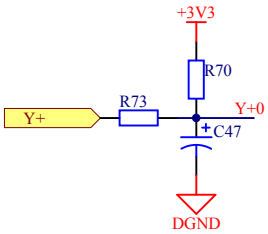
+3V3
R70
R73
Y+
Y+0
C47
DGND

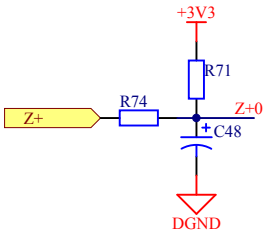
+3V3
R71
R74
Z+
Z+0
C48
DGND

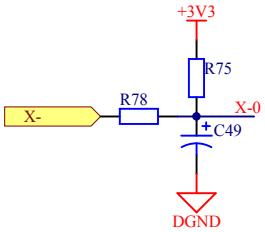
+3V3
R75
R78
X-
X-0
C49
DGND

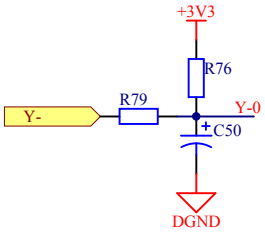
+3V3
R76
R79
Y-
Y-0
C50
DGND

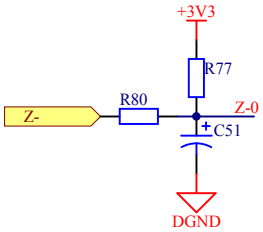
+3V3
R77
R80
Z-
Z-0
C51
DGND

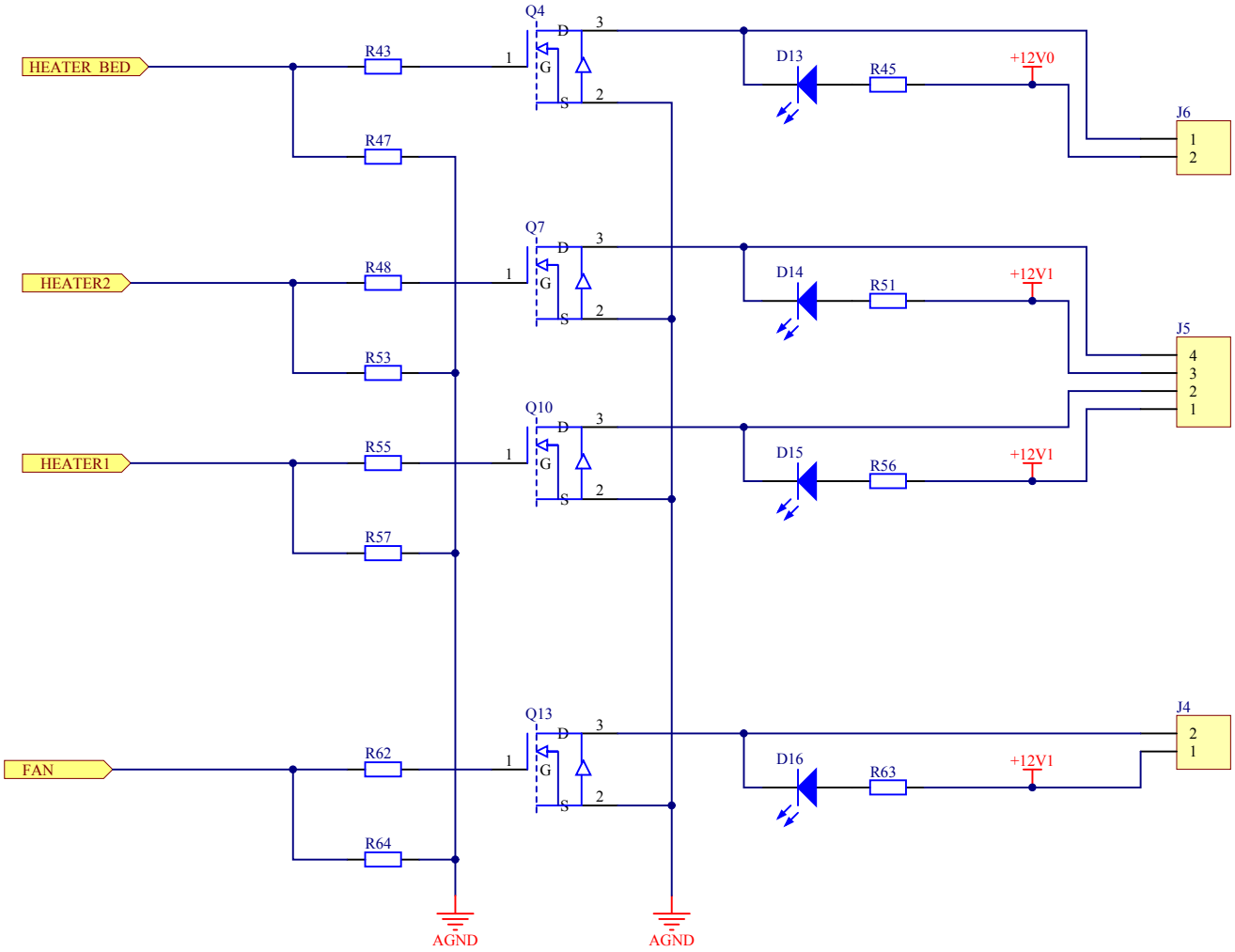
HEATER_BED
HEATER2
HEATER1
FAN
R43
R47
R48
R53
R55
R57
R62
R64
Q4
Q7
Q10
Q13
D
G
S
1
2
3
D13
D14
D15
D16
R45
R51
R56
R63
+12V0
+12V1
J6
J5
J4
AGND

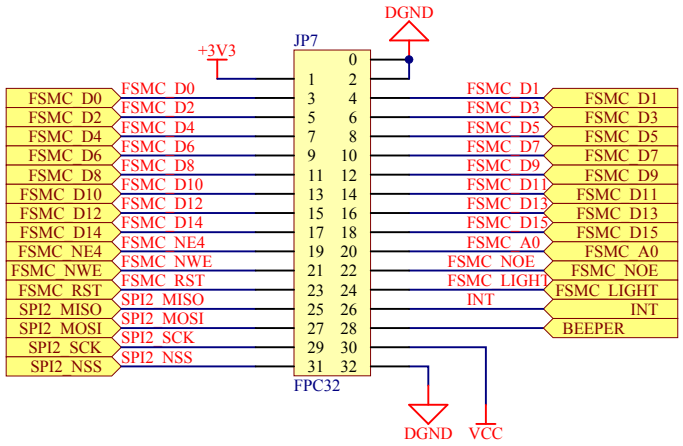
DGND
+3V3
JP7
FSMC_D0
FSMC_D2
FSMC_D4
FSMC_D6
FSMC_D8
FSMC_D10
FSMC_D12
FSMC_D14
FSMC_NE4
FSMC_NWE
FSMC_RST
SPI2_MISO
SPI2_MOSI
SPI2_SCK
SPI2_NSS
FSMC_D1
FSMC_D3
FSMC_D5
FSMC_D7
FSMC_D9
FSMC_D11
FSMC_D13
FSMC_D15
FSMC_A0
FSMC_NOE
FSMC_LIGHT
INT
BEEPER
FPC32
DGND
VCC

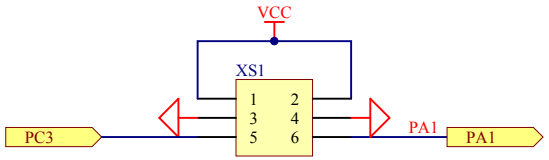
VCC
XS1
PC3
PA1
PA1

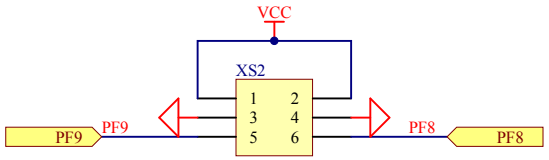
VCC
XS2
PF9
PF9
PF8
PF8

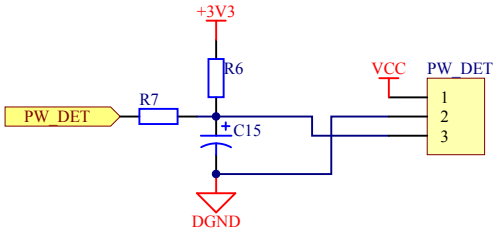
+3V3
R6
R7
PW_DET
C15
VCC
PW_DET
DGND

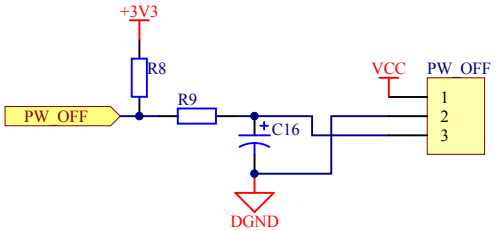
+3V3
R8
R9
PW_OFF
C16
VCC
PW_OFF
DGND

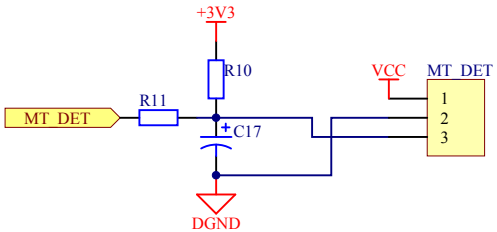
+3V3
R10
R11
MT_DET
C17
VCC
MT_DET
DGND

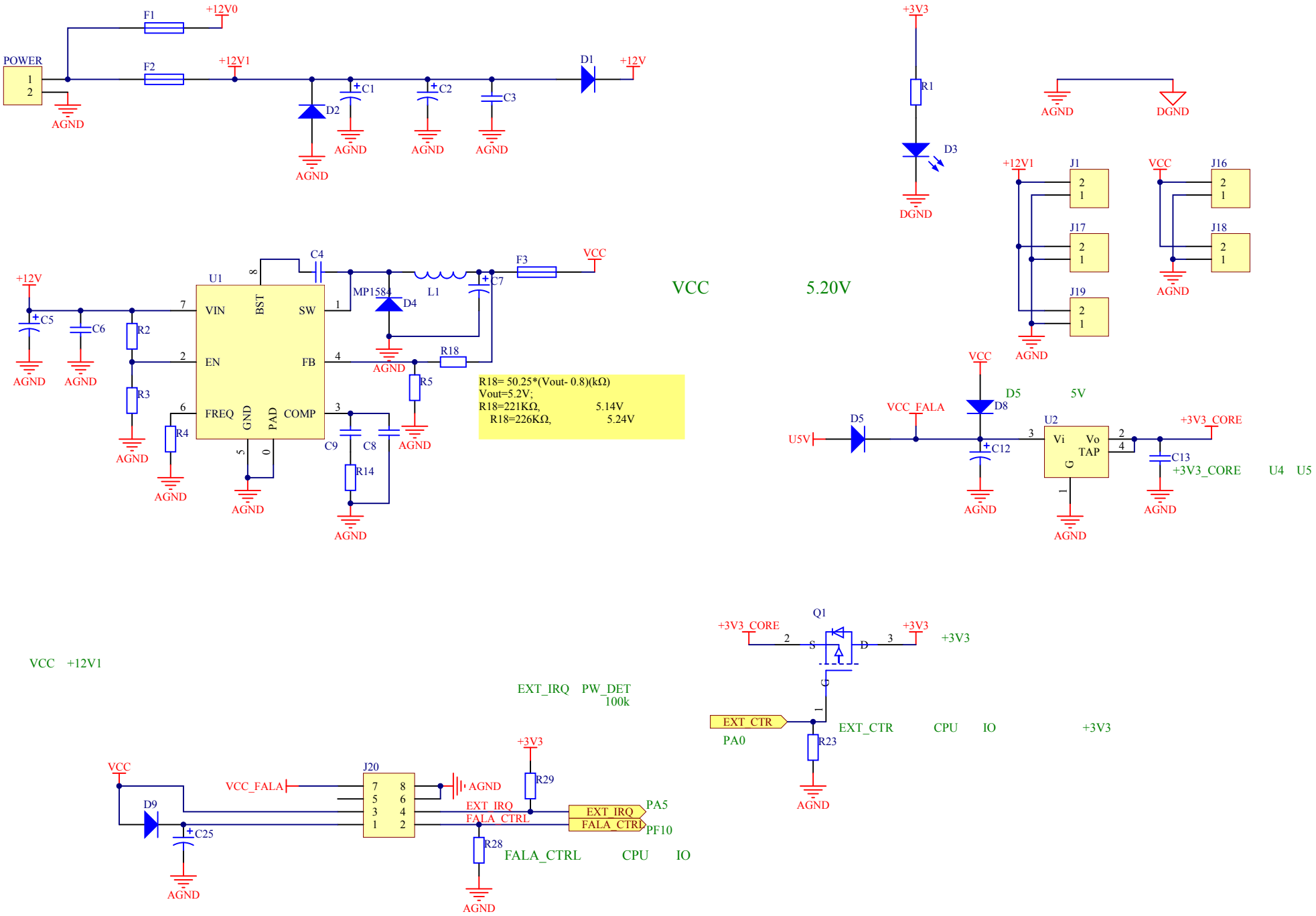
POWER
F1
F2
+12V0
+12V1
+12V
D1
D2
C1
C2
C3
AGND
+3V3
R1
D3
DGND
J1
J16
J17
J18
J19
VCC
U1
VIN
BST
SW
EN
FB
FREQ
GND
PAD
COMP
C4
C5
C6
C7
C8
C9
C12
C13
R2
R3
R4
R5
R14
R18
F3
MP1584
D4
L1
R18= 50.25*(Vout- 0.8)(kΩ)
Vout=5.2V;
R18=221KΩ, 5.14V
R18=226KΩ, 5.24V
VCC 5.20V
U5V
VCC_FALA
D5
D8
5V
U2
Vi
Vo
TAP
G
+3V3_CORE
U4 U5
VCC +12V1
EXT_IRQ PW_DET
100k
J20
VCC_FALA
D9
C25
R29
R28
EXT_IRQ
FALA_CTRL
PA5
PF10
FALA_CTRL CPU IO
Q1
S
D
EXT_CTR
PA0
R23
EXT_CTR CPU IO +3V3

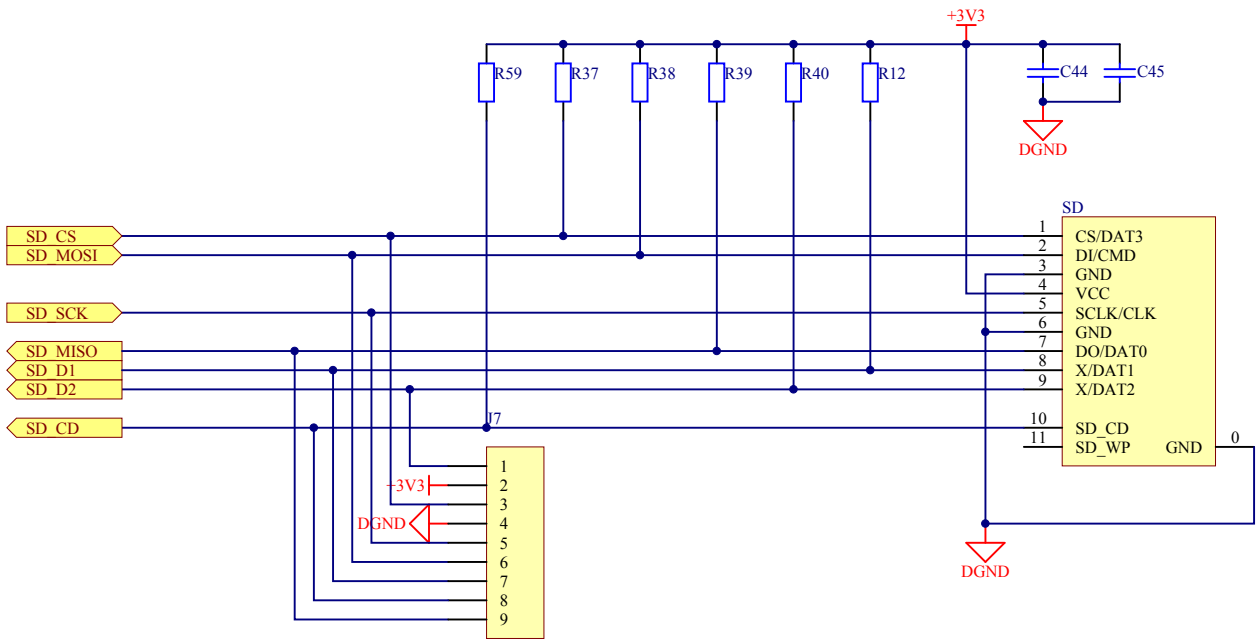
+3V3
R59
R37
R38
R39
R40
R12
C44
C45
DGND
SD
SD_CS
SD_MOSI
SD_SCK
SD_MISO
SD_D1
SD_D2
SD_CD
1
2
3
4
5
6
7
8
9
10
11
CS/DAT3
DI/CMD
GND
VCC
SCLK/CLK
GND
DO/DAT0
X/DAT1
X/DAT2
SD_CD
SD_WP
GND
0
J7
+3V3
DGND
DGND

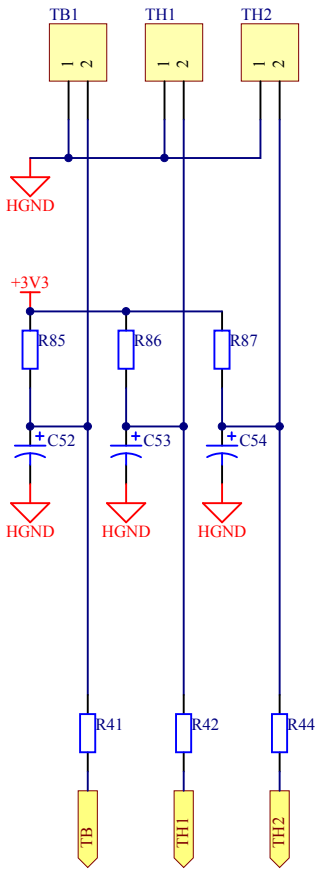
TB1
TH1
TH2
1
2
HGND
+3V3
R85
R86
R87
C52
C53
C54
HGND
HGND
HGND
R41
R42
R44
TB
TH1
TH2

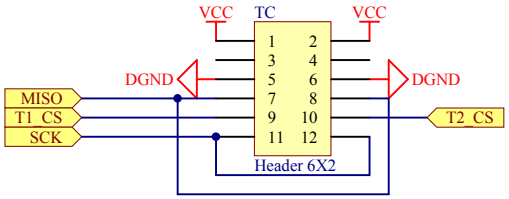
VCC
TC
VCC
DGND
DGND
MISO
T1_CS
SCK
T2_CS
1 2
3 4
5 6
7 8
9 10
11 12
Header 6X2

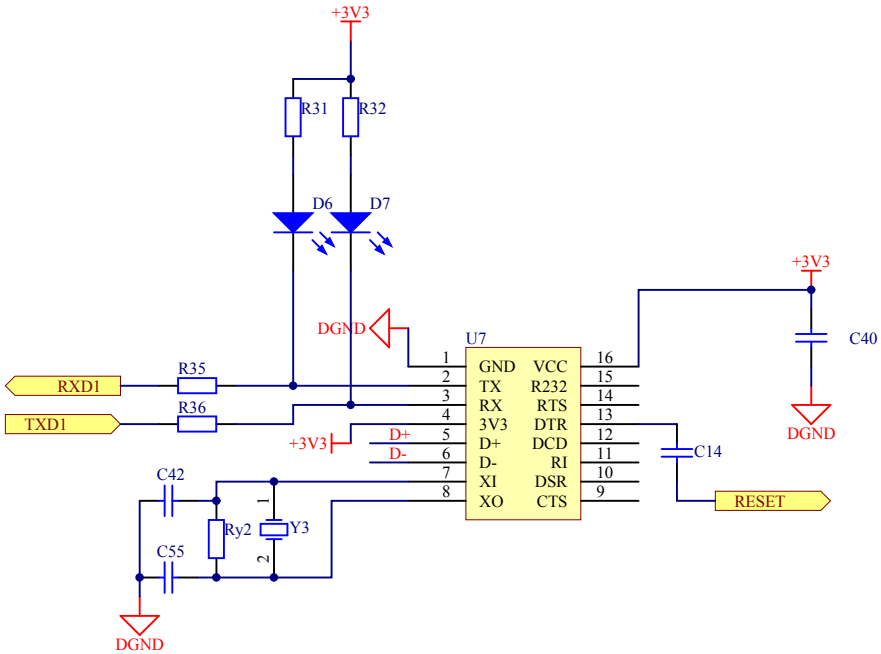
+3V3
R31
R32
D6
D7
DGND
U7
GND
TX
RX
3V3
D+
D-
XI
XO
VCC
R232
RTS
DTR
DCD
RI
DSR
CTS
RXD1
TXD1
R35
R36
+3V3
D+
D-
C40
C14
RESET
C42
C55
Ry2
Y3
DGND

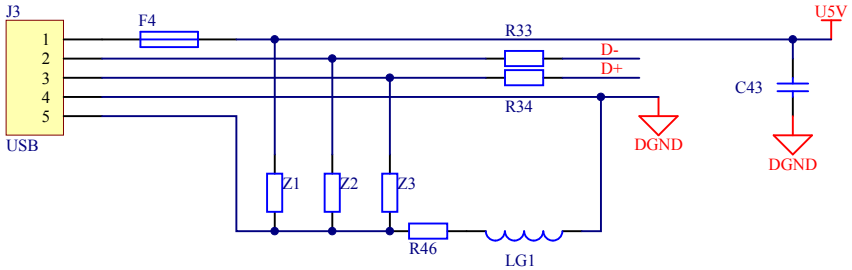
J3
USB
F4
R33
R34
D-
D+
U5V
C43
DGND
Z1
Z2
Z3
R46
LG1

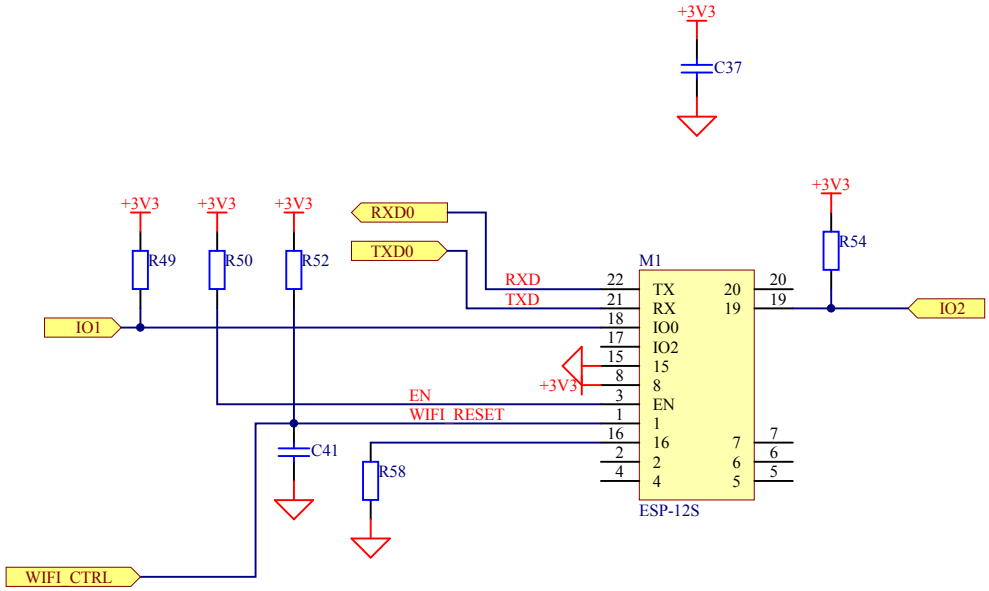
+3V3
C37
+3V3
+3V3
+3V3
RXD0
TXD0
R49
R50
R52
R54
M1
RXD
TXD
22
21
18
17
15
8
3
1
16
2
4
TX
RX
IO0
IO2
15
8
EN
1
16
2
4
20
19
7
6
5
20
19
IO1
IO2
+3V3
EN
WIFI_RESET
C41
R58
ESP-12S
WIFI_CTRL

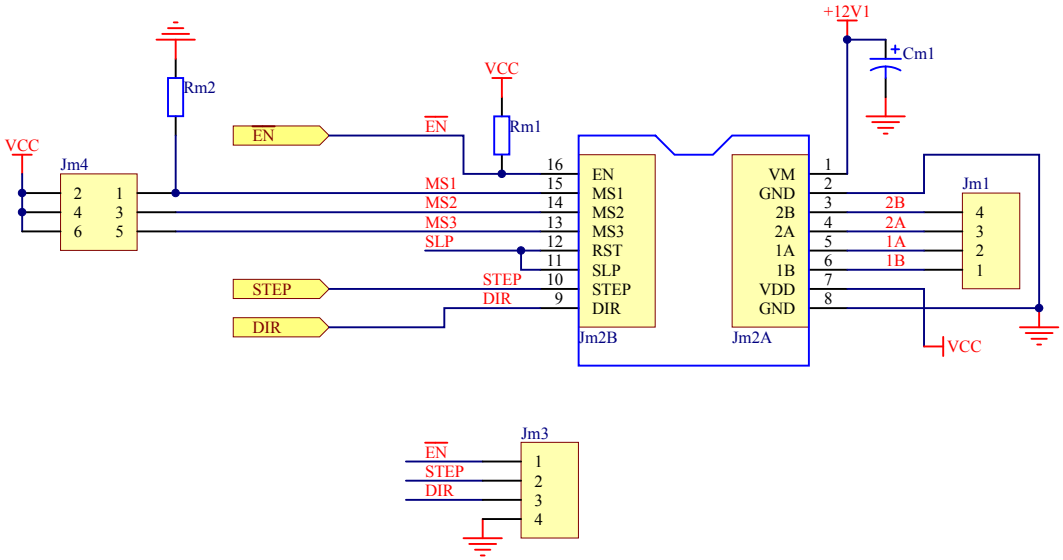
VCC
Jm4
2
4
6
1
3
5
Rm2
EN
STEP
DIR
VCC
Rm1
EN
MS1
MS2
MS3
SLP
STEP
DIR
16
15
14
13
12
11
10
9
EN
MS1
MS2
MS3
RST
SLP
STEP
DIR
Jm2B
+12V1
Cm1
VM
GND
2B
2A
1A
1B
VDD
GND
1
2
3
4
5
6
7
8
Jm2A
2B
2A
1A
1B
Jm1
4
3
2
1
VCC
Jm3
EN
STEP
DIR
1
2
3
4