Potential Functions

Configuration Space

- A key concept for motion planning is a **configuration**:

  a <u>complete</u> specification of the position of every point in the system

- A simple example: a robot that translates but does not rotate in the plane:
  - what is a sufficient representation of its configuration?

The space of all configurations is the configuration space or C-space.

C-space formalism:
Lozano-Perez '79

Three Fundamental Issues with C-space

- How do we describe configurations?
  - What is the fundamental space of configurations for a mechanisms?
  - How we relate the configuration space to the workspace? Kinematics
- How are configurations related to controllable inputs to the system?
  - Holonomic vs. Non-holonomic systems
  - Effect of dynamics
- How are obstacles represented in C-space
  - Explicit mapping via Inverse kinematics
  - Implicit in algorithm

Configuration Space

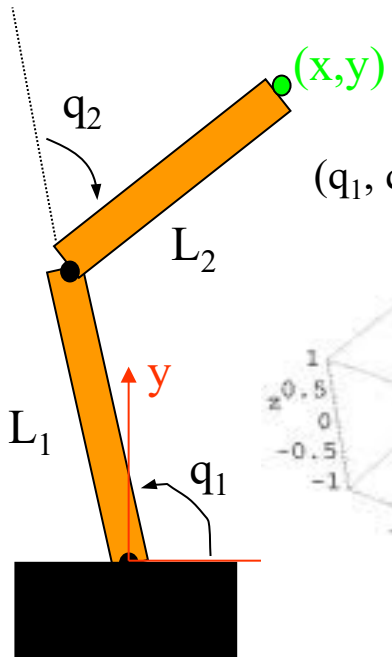

$S^1 \times S^1$

Cartesian product of two circles (2D torus)

$$\begin{bmatrix} x \\ y \end{bmatrix} = \begin{bmatrix} L_1 \cos(q_1) \\ L_1 \cos(q_1) \end{bmatrix} + \begin{bmatrix} L_1 \cos(q_1 + q_2) \\ L_1 \cos(q_1 + q_2) \end{bmatrix}$$

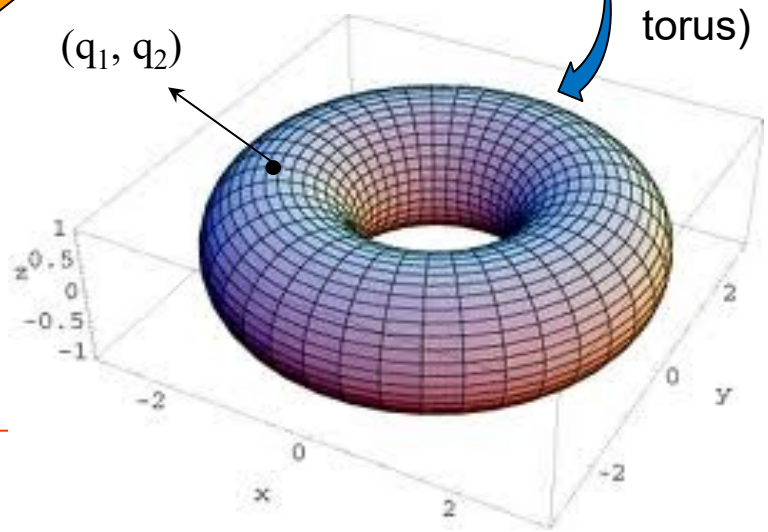

Topology of Configuration Space

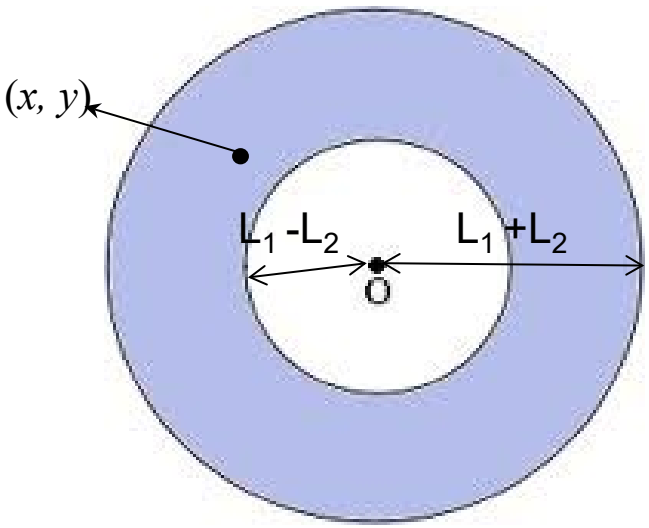

The Workspace

Configuration Space

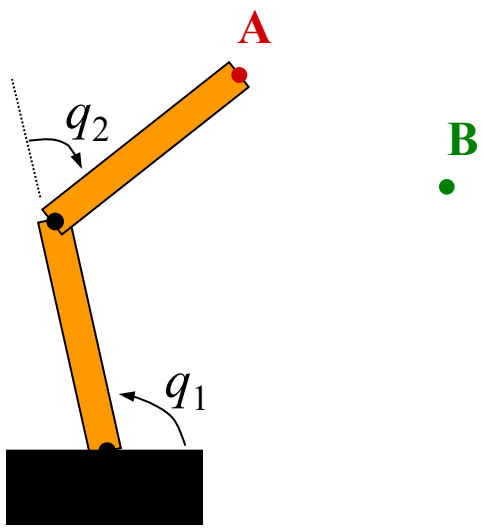

Where do we put **B**?

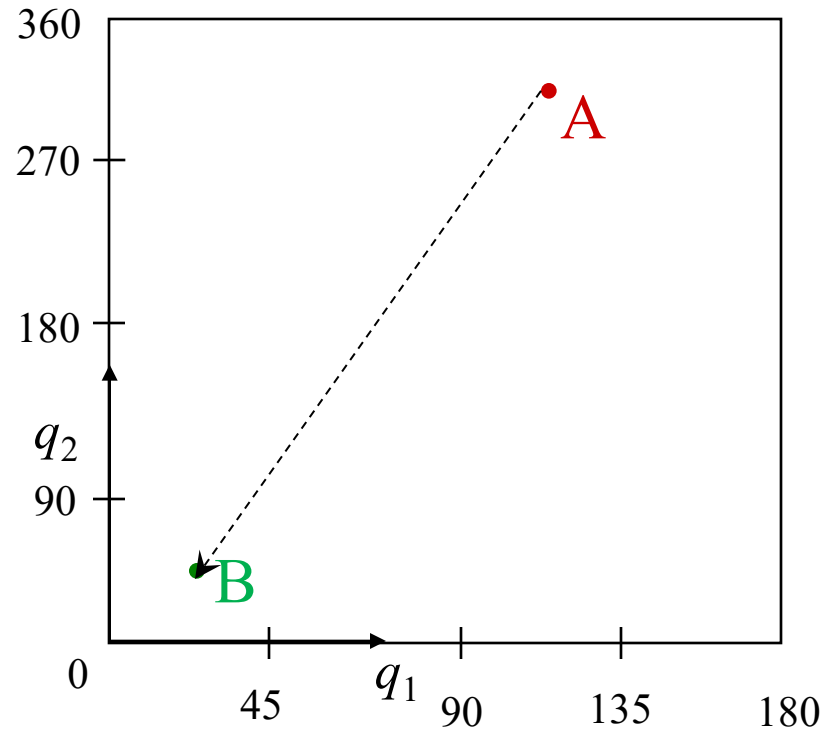

Torus

(wraps horizontally and vertically)

Configuration Space

Where do we put 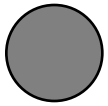 ?

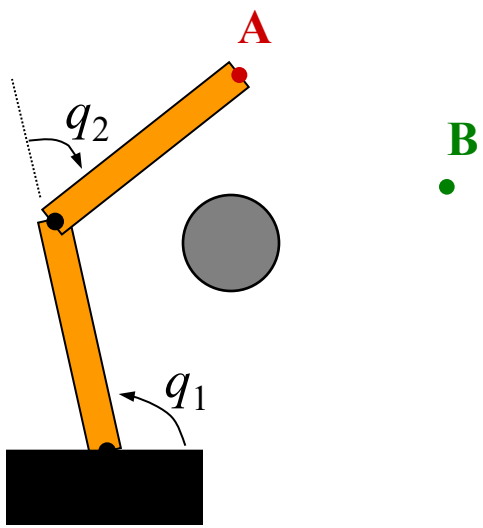

An obstacle in the robot's workspace

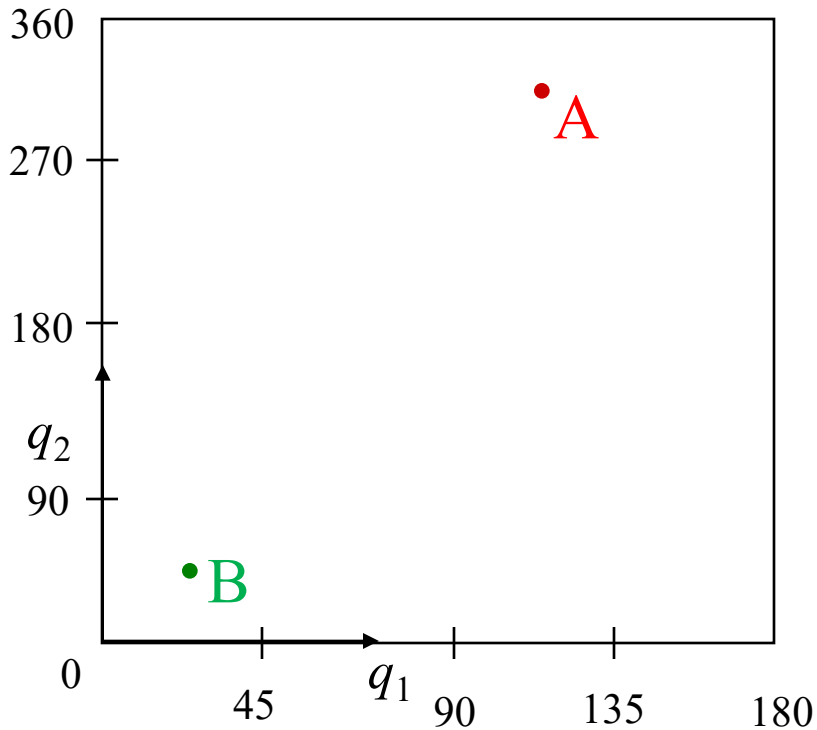

Torus

(wraps horizontally and vertically)

Configuration Space

Reference *configuration*

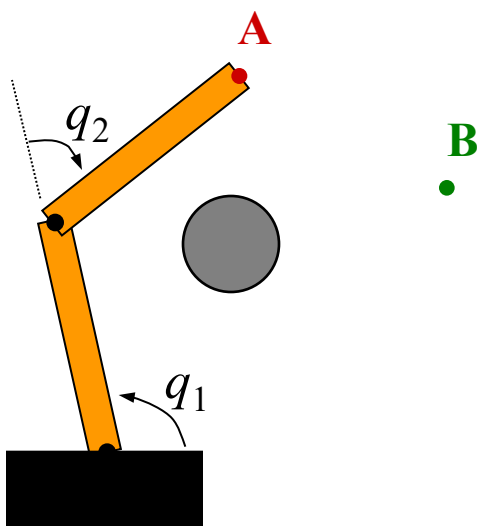

An obstacle in the robot's workspace

How do we get from **A** to **B** ?

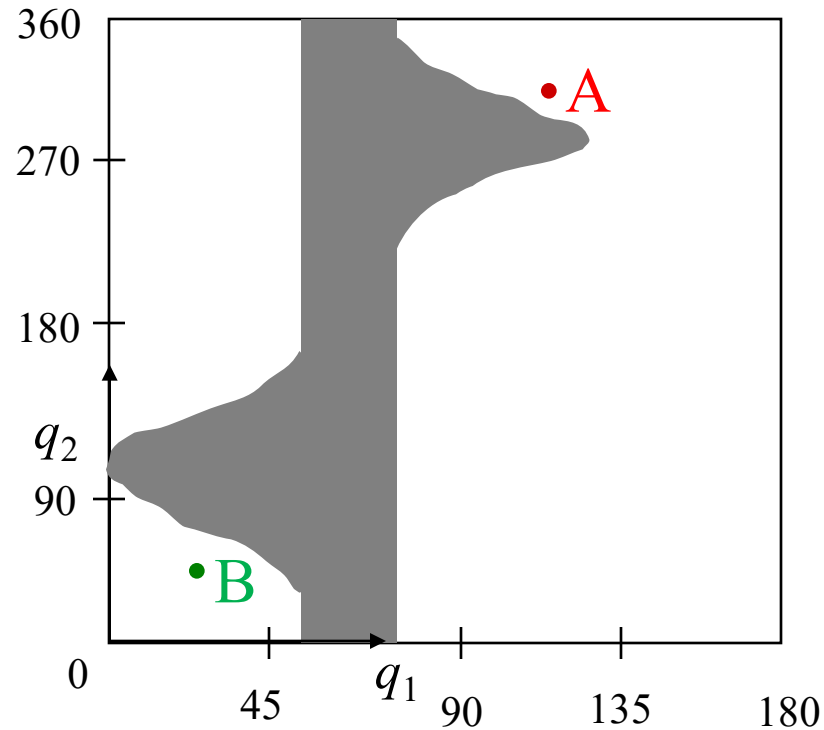

The C-space representation of this obstacle…

Two Link Path

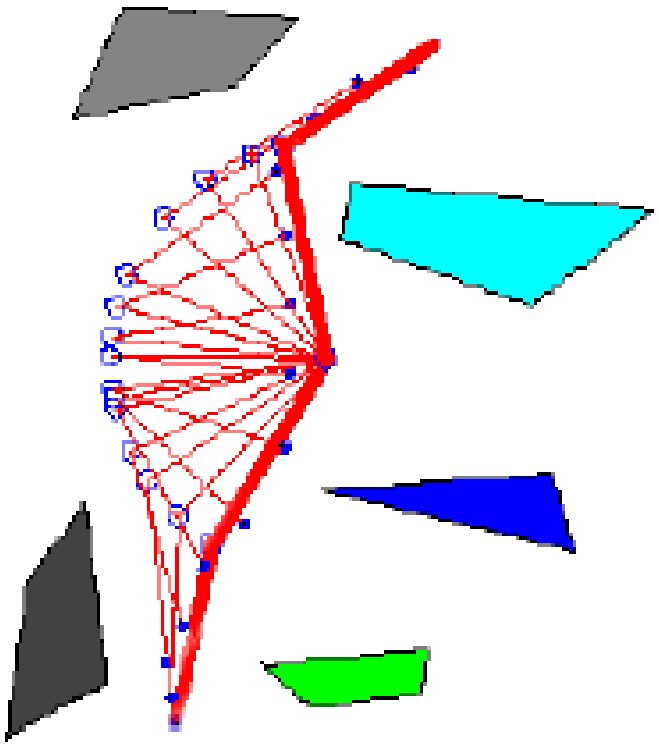

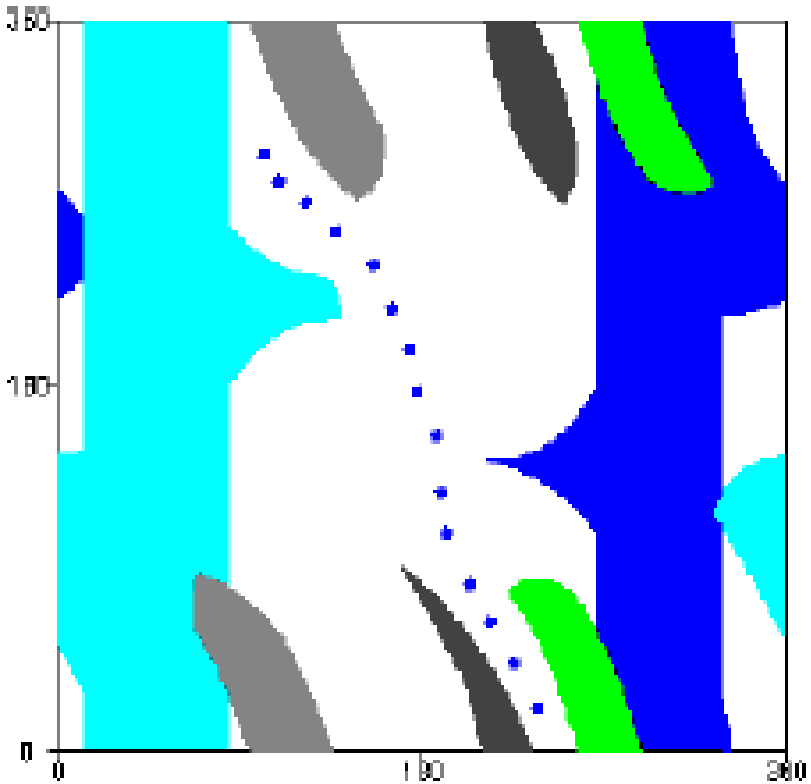

Thanks to Ken Goldberg