REV	Description	DATE	BY
v1.0	Initial Release	2015-10-19	Xiangnan.Qu

Seeed Studio

TITLE: Respeaker Core v1.0

CC-BY-SA

Design: | Check: | Date: 16/10/19 下午2:38 | Vision: | Sheet: 1/1

POWER/LED/BUTTON

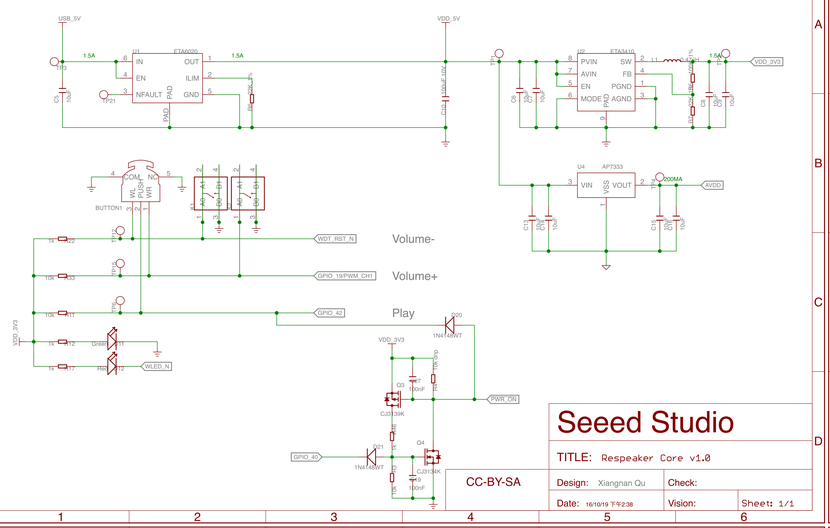

Seeed Studio

TITLE: Respeaker Core v1.0

CC-BY-SA

Design: Xiangnan Qu | Check: | Date: 16/10/19 下午2:38 | Vision: | Sheet: 1/1

CROPROCESSER TOUCH BUTTON

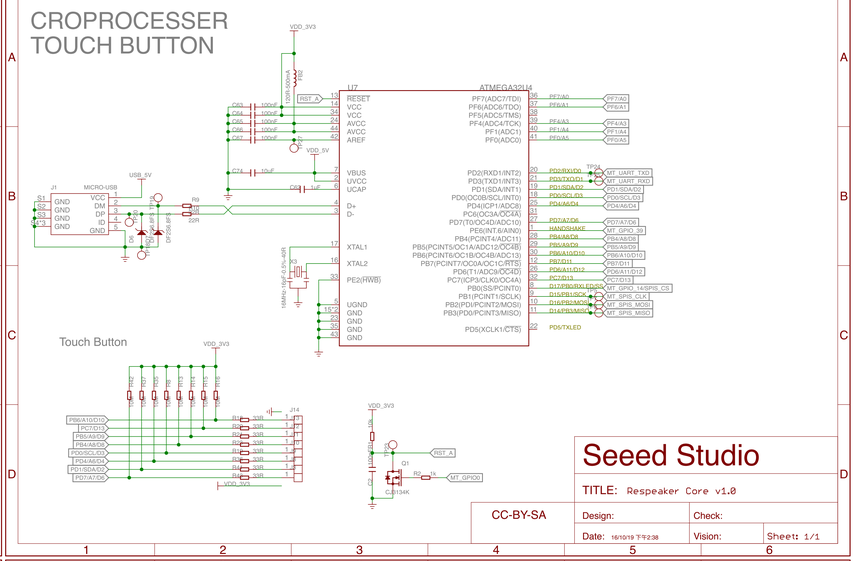

Seeed Studio

TITLE: Respeaker Core v1.0

CC-BY-SA

Design: | Check: | Date: 16/10/19 下午2:38 | Vision: | Sheet: 1/1

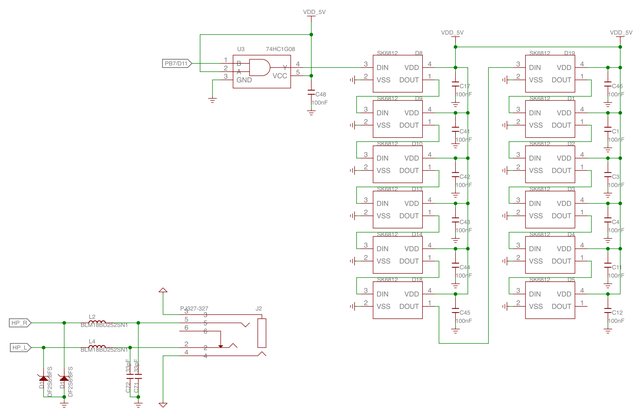

Seeed Studio

TITLE: Respeaker Core v1.0

CC-BY-SA

Design: | Check: | Date: 16/10/19 下午2:38 | Vision: | Sheet: 1/1

AI7688 SD CARD

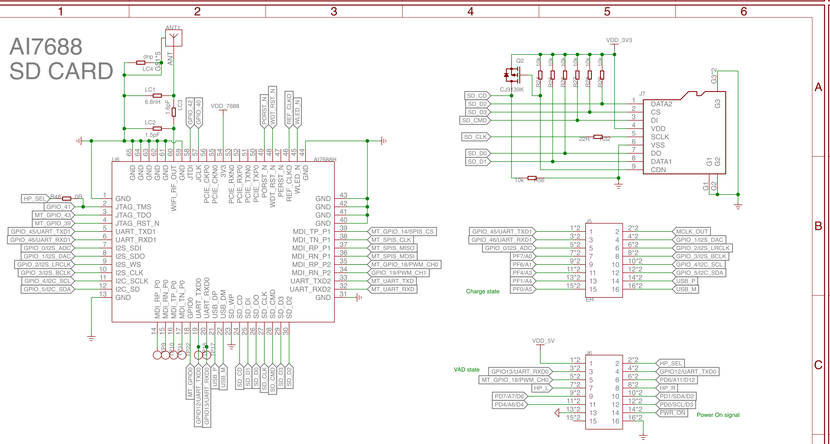

Seeed Studio

TITLE: Respeaker Core v1.0

CC-BY-SA

Design: Xiangnan Qu | Check: | Date: 16/10/19 下午2:38 | Vision: | Sheet: 1/1

CODEC

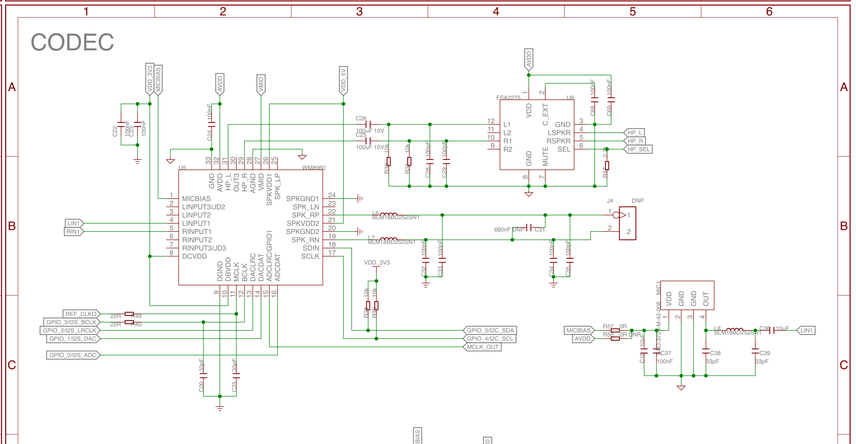

Seeed Studio

TITLE: Respeaker Core v1.0

CC-BY-SA

Design: Xiangnan Qu | Check: | Date: 16/10/19 下午2:38 | Vision: | Sheet: 1/1