REVISION RECORD			
LTR	ECO NO:	APPROVED:	DATE:

BLE

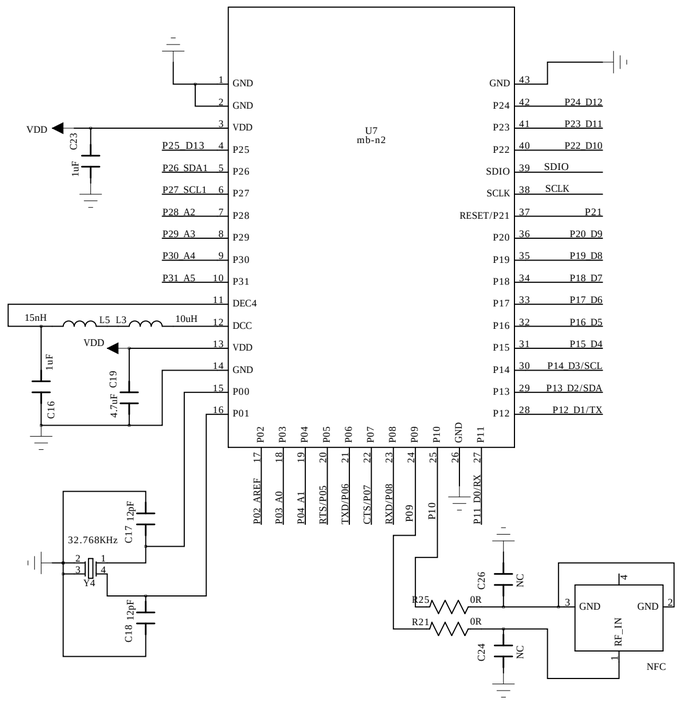

CoProcessor

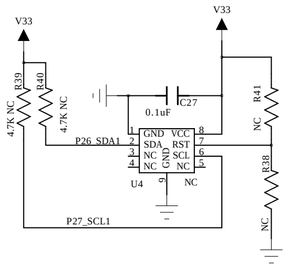

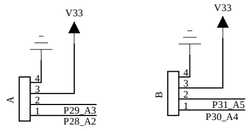

POWER

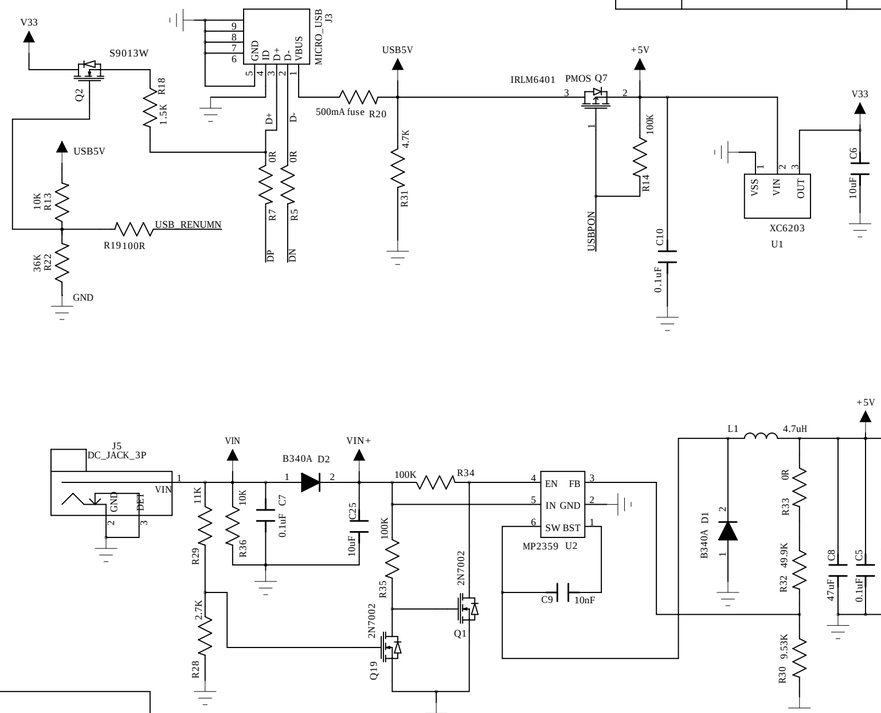

MCU

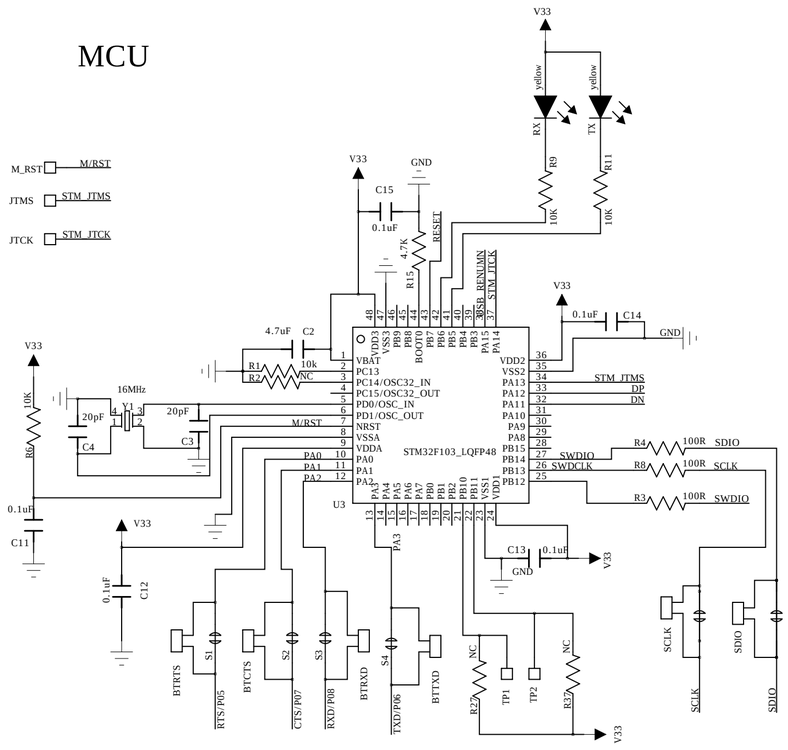

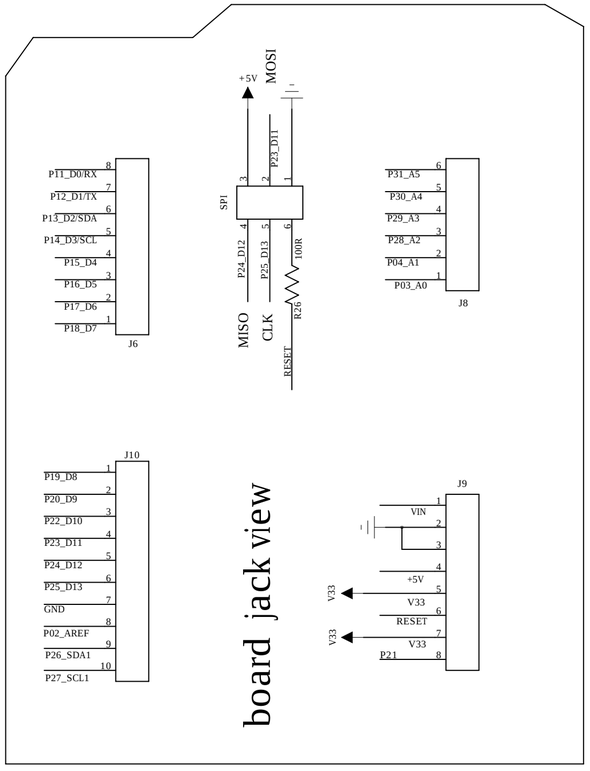

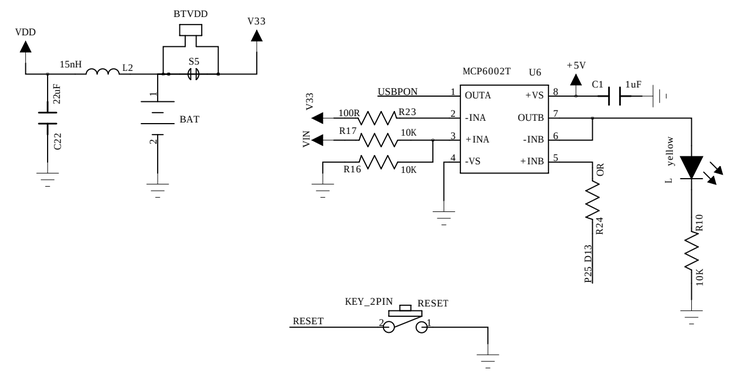

TP

DRAWN: ping	DATED: 2016 11 02	COMPANY: Red Bear Company Limited	
		TITLE: Blend v2.0	
CHECKED: <Checked By>	DATED: <Checked Date>	CODE: <Code>	SIZE: A2 / DRAWING NO: / REV:
QUALITY CONTROL: <QC By>	DATED: <QC Date>		
RELEASED: <Released By>	DATED: <Release Date>	SCALE: <Scale>	SHEET: 1 OF 1