REVISION RECORD			
LTR	ECO NO:	APPROVED:	DATE:

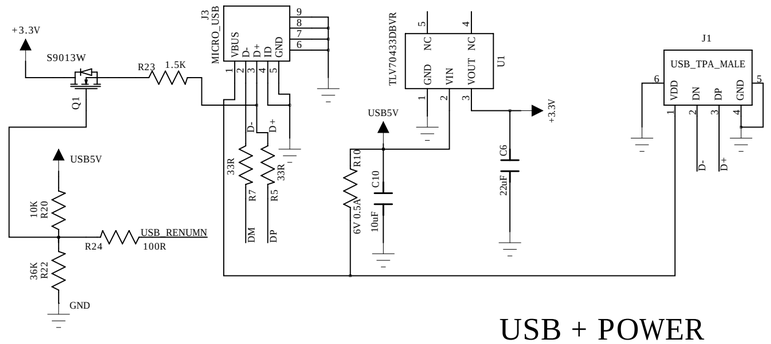

USB + POWER

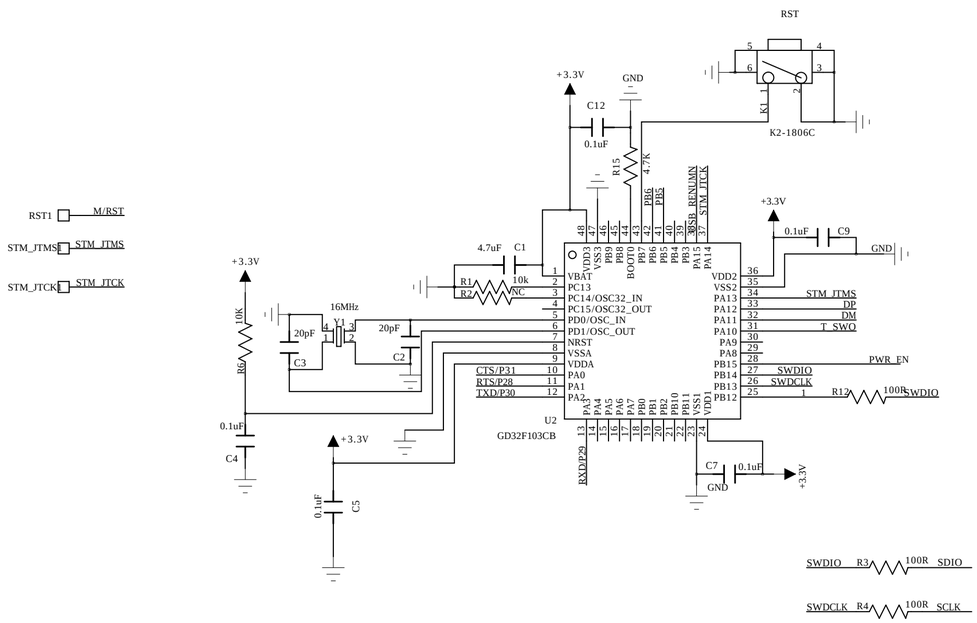

MCU

Nano Connector

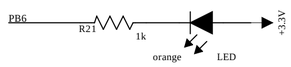

Status LED

		COMPANY: Red Bear			
		TITLE: DAPLink v1.5			
DRAWN: Ping	DATED: 2016.12.30				
CHECKED:	DATED:	CODE:	SIZE: A2	DRAWING NO:	REV: V1.0
QUALITY CONTROL:	DATED:				
RELEASED:	DATED:	SCALE:		SHEET: 1 OF 1	