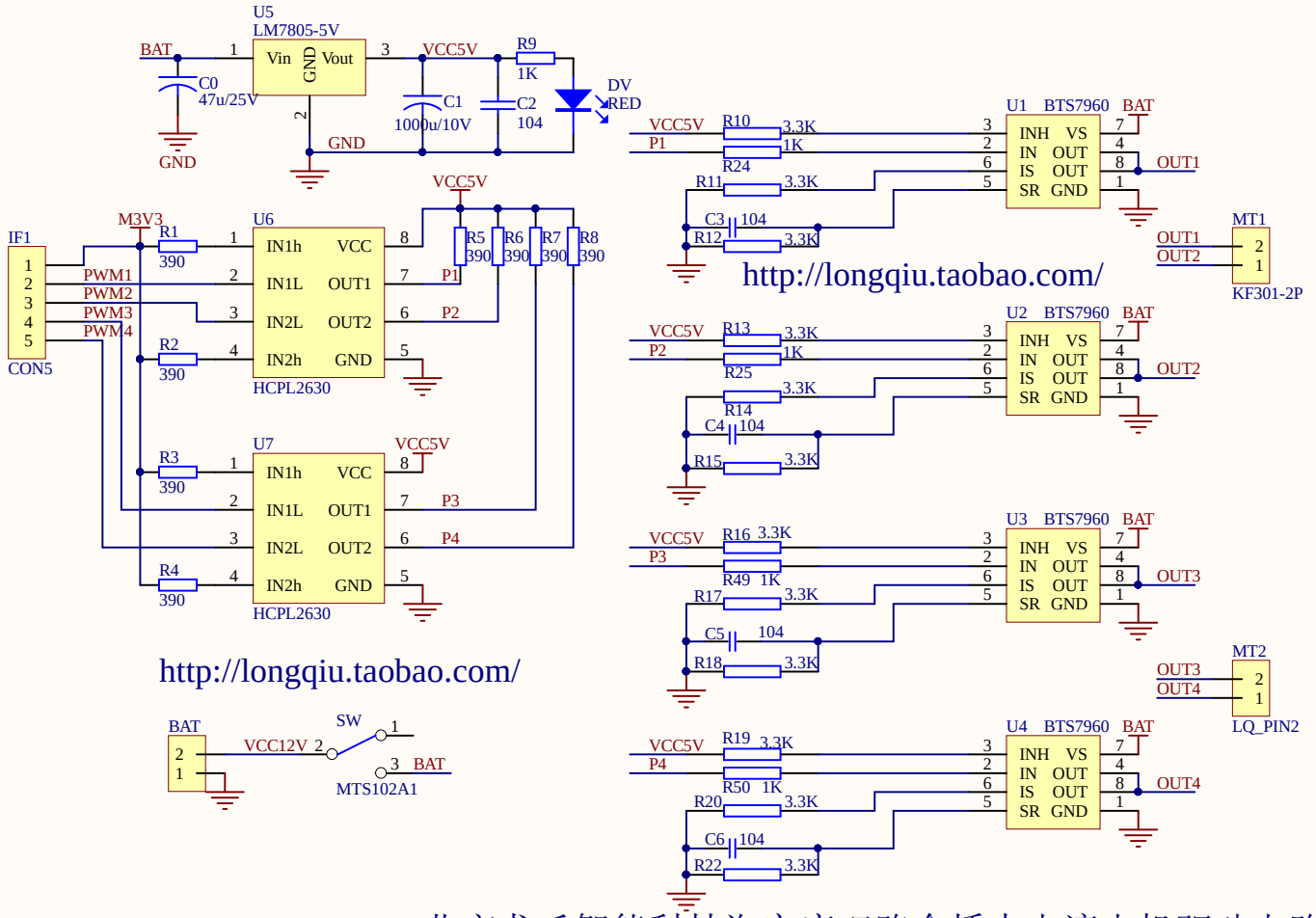

http://longqiu.taobao.com/

http://longqiu.taobao.com/

北京龙丘智能科技淘宝店双路全桥大电流电机驱动电路

http://longqiu.taobao.com/

Title		
Size D	Number	Revision
Date: 2020/11/23	Sheet of	
File: H:\PcbPrj\..\LQ光隔双路79XXV4.SchDoc	Drawn By:	