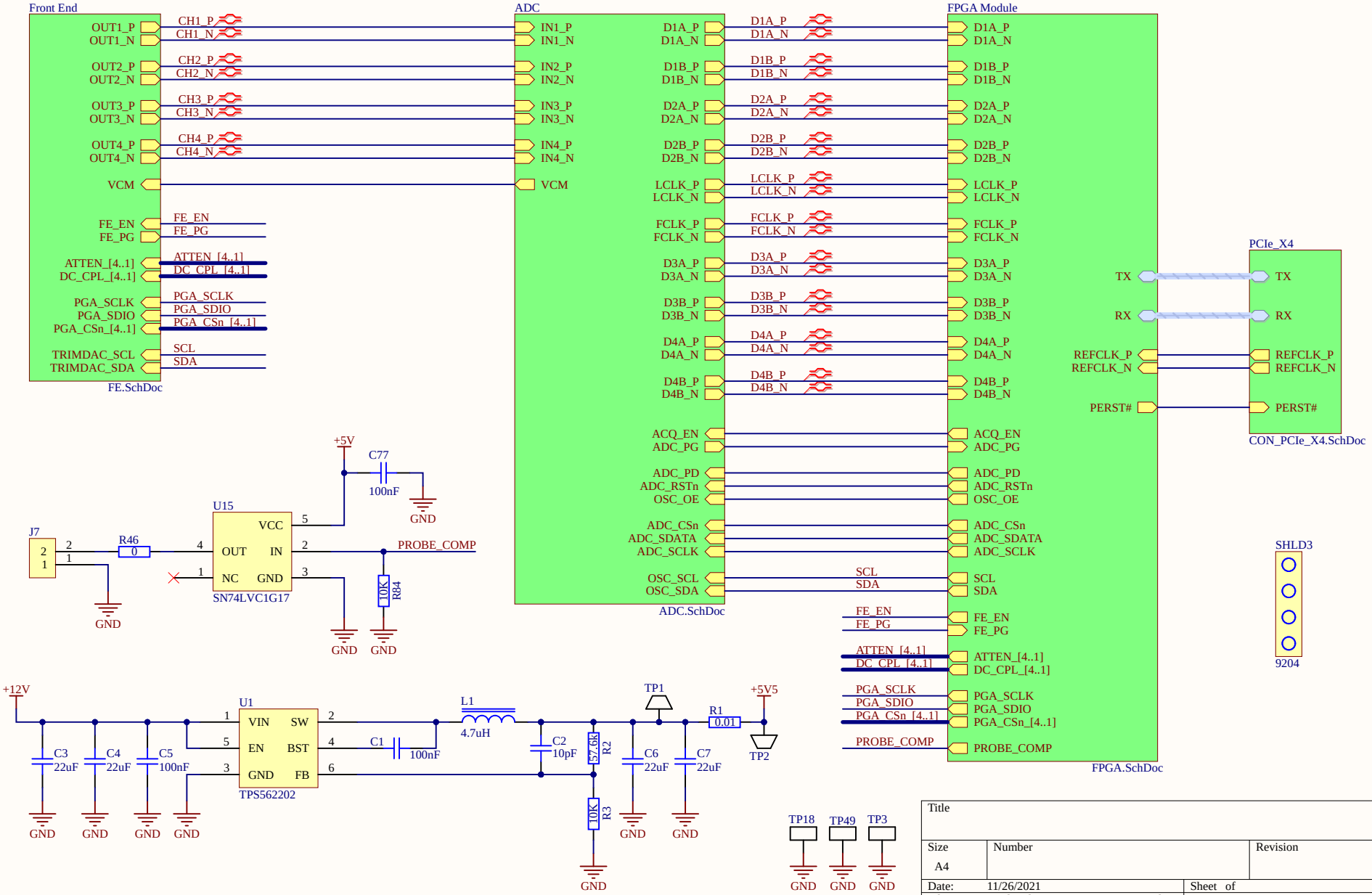

Title		
Size A4	Number	Revision
Date: 11/26/2021		Sheet of
File: F:\ThunderScope-master\..\Main.SchDoc		Drawn By: