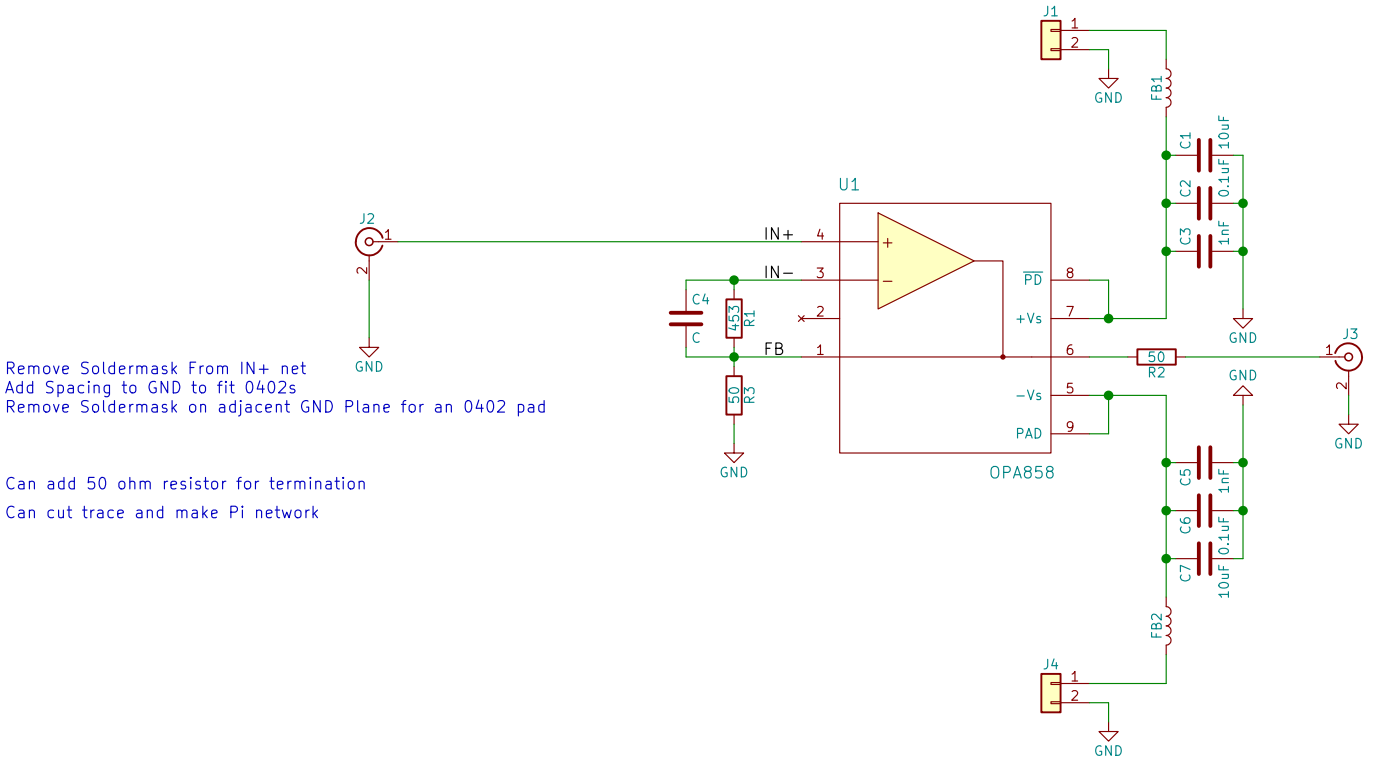

Remove Soldermask From IN+ net
Add Spacing to GND to fit 0402s
Remove Soldermask on adjacent GND Plane for an 0402 pad

Can add 50 ohm resistor for termination

Can cut trace and make Pi network

Sheet: /		
File: OPA858.sch		
Title:		
Size: A4	Date:	**Rev:**
KiCad E.D.A. kicad 5.1.2-f72e74a84ubuntu18.04.1		Id: 1/1