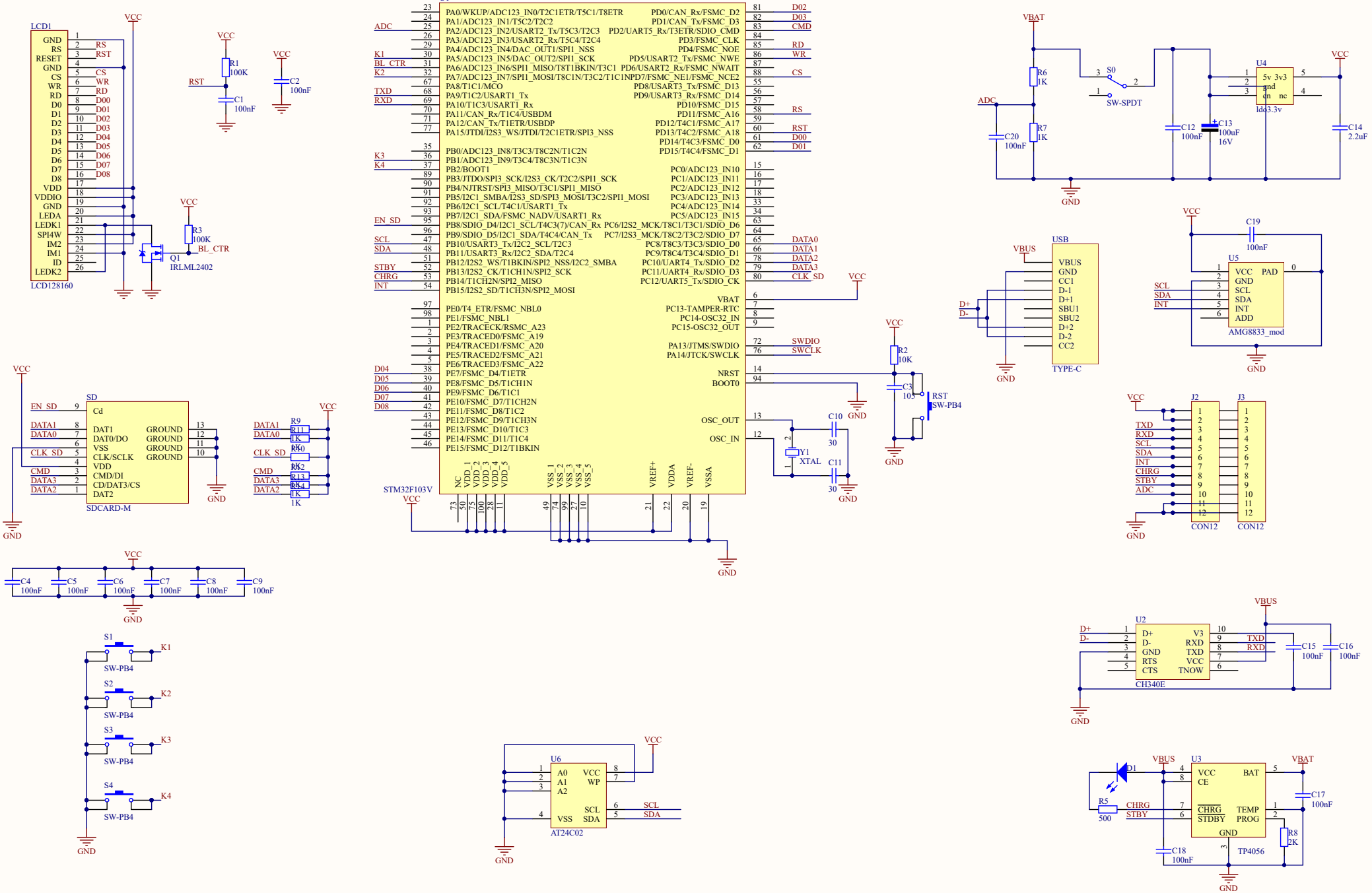
LCD1
LCD128160
U1
STM32F103V
U4
5v 3v3
ldo3.3v
U5
AMG8833_mod
USB
TYPE-C
SD
SDCARD-M
J2
J3
CON12
U2
CH340E
U6
AT24C02
U3
TP4056
Q1
IRLML2402
SW-SPDT
SW-PB4
Y1
XTAL
VCC
GND
VBAT
VBUS
Title
Size
A3
Number
Revision
Date: 2018/8/23
Sheet of
File: E:\github\flir\layer\mothermoard.SchDoc
Drawn By: