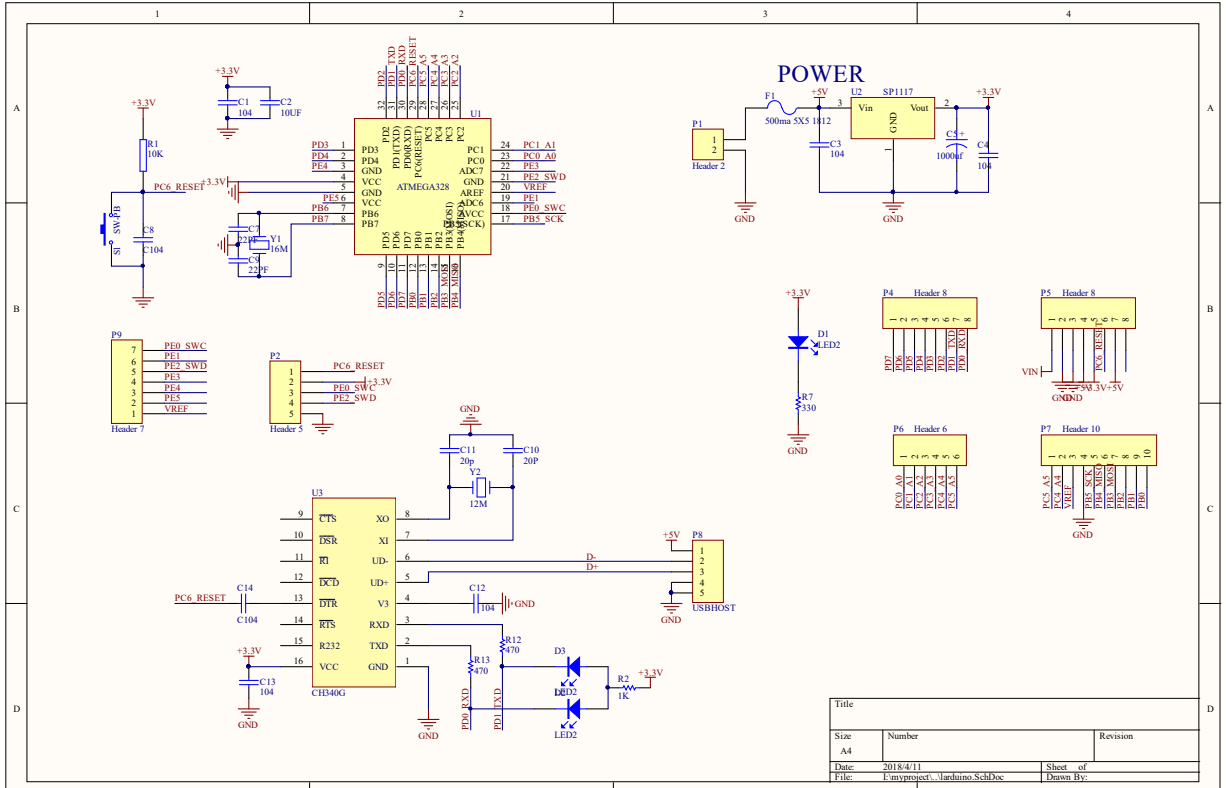
POWER
U1
ATMEGA328
U2
SP1117
F1
500ma 5X5 1812
P1
Header 2
C1
104
C2
10UF
R1
10K
C8
C104
SW-PB
C7
22pF
C6
22pF
Y1
16M
C3
104
C5
1000uf
C4
104
D1
LED2
R7
330
P4
Header 8
P5
Header 8
P6
Header 6
P7
Header 10
P9
Header 7
P2
Header 5
C11
20p
C10
20P
Y2
12M
U3
CH340G
C14
C104
C13
104
C12
104
R12
470
R13
470
D3
LED2
R2
1K
P8
USBHOST
D-
D+
PC6_RESET
PE0_SWC
PE2_SWD
VREF
+3.3V
+5V
GND
Title
Size
A4
Number
Revision
Date:
2018/4/11
Sheet of
File:
E:\myproject\..\larduino.SchDoc
Drawn By: